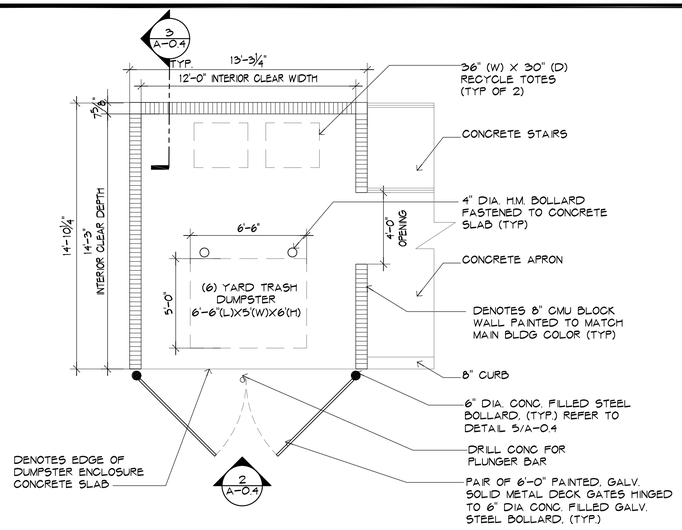

1 1/4"=1'-0" **DUMPSTER ENCLOSURE PLAN**

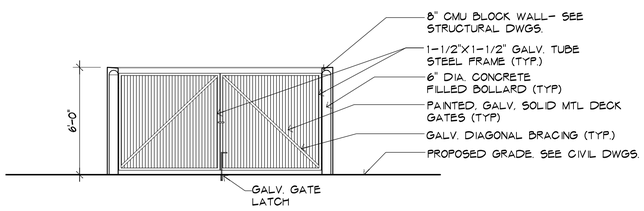

2 1/4"=1'-0" **DUMPSTER ENCLOSURE ELEVATION**

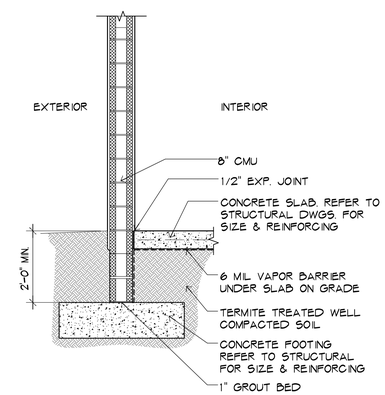

4 N/A **FOOTING DETAIL @BLDG**

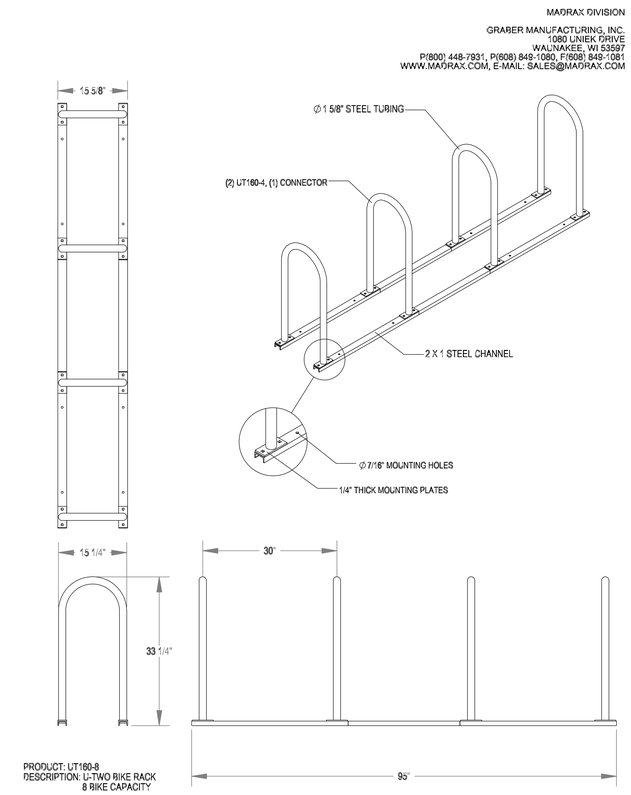

NOTES:
1. INSTALL BIKE RACKS ACCORDING TO MANUFACTURER'S SPECIFICATIONS.
2. CONSULTANT TO SELECT COLOR/FINISH. SEE MANUFACTURER'S SPECIFICATIONS.
3. SEE SITE PLAN FOR LOCATION OR CONSULT OWNER.

5 1/4"=1'-0" **BIKE PARKING DETAILS**

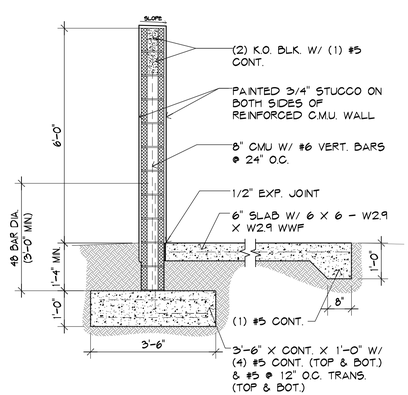

3 3/4"=1'-0" **DUMPSTER WALL TYP. DETAIL**

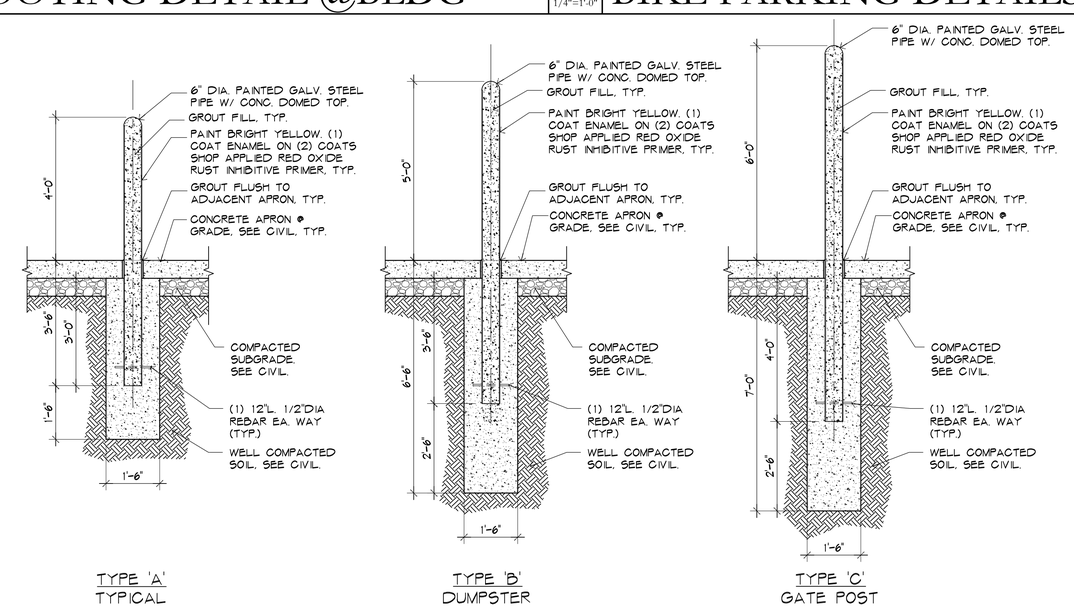

5 1/2"=1'-0" **BOLLARD TYP. DETAILS**

3081 McNab Road

Project at

3081 McNab Rd, Pompano Beach, Florida 33069

NO.	DATE: REVISION

ALL DRAWINGS, SPECIFICATIONS AND RELATED DOCUMENTS ARE THE COPYRIGHT PROPERTY OF THE ARCHITECT AND MUST BE RETURNED UPON REQUEST. REPRODUCTION OF DRAWINGS, SPECIFICATIONS AND RELATED DOCUMENTS IN PART OR WHOLE IS FORBIDDEN WITHOUT THE ARCHITECT'S WRITTEN PERMISSION.

CONTRACTOR MUST CHECK AND VERIFY ALL DIMENSIONS AND FIELD CONDITIONS AND NOTIFY ARCHITECT/ENGINEER IMMEDIATELY OF ANY DISCREPANCIES.

HNM ARCHITECTURE
3705 North Federal Highway • Delray Beach, Florida 33483 • T. 561.733.2225
info@hnm-architecture.com • AA26000726 • www. hnm-architecture.com

Digitally signed by Michael Hanlon
Date: 2024.09.03 10:20:10-04'00'

MICHAEL W. HANLON
FLORIDA REGISTERED ARCHITECT REG. NUMBER: AR0017270

ELECTRONIC SIGNATURE SERIAL NUMBER:

HNM PROJECT NUMBER: 23-055

ISSUED DATE: 2024-08-30

SCALE: AS NOTED

TITLE: SITE DETAILS

SHEET NUMBER: A-0.4

DRC
PZ24-12000016
10/16/2024