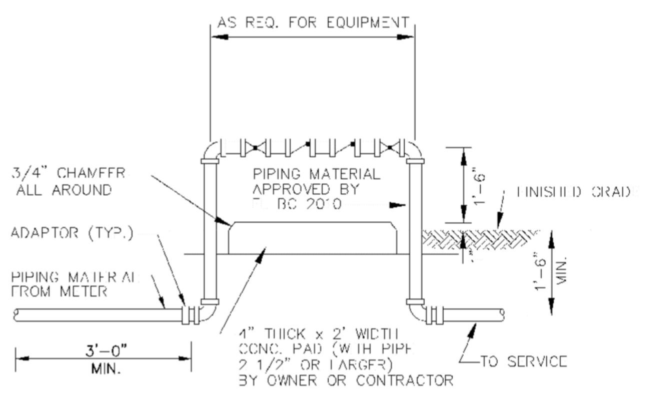

BACKFLOW PREVENTER

USE MEGALUGS AT ALL PIPE JOINTS 3" AND LARGER
PLEASE SEE METER INSTALL DIMENSION LIST ON STANDARD NO. 106-4
SMALL UNITS UNI STRUT SUPPORT

ENGINEERING STANDARDS 2022

REVISIONS		ENGINEERING DIVISION CITY OF POMPANO BEACH	BACKFLOW PREVENTER
BY	DATE		
T.W.	04-2008		DATE: MAY 2022 DWG. NO. 106-1
S.S.	03-2009		
S.S.	11-2012	SCALE: N.T.S.	
S.S.	01-2014		

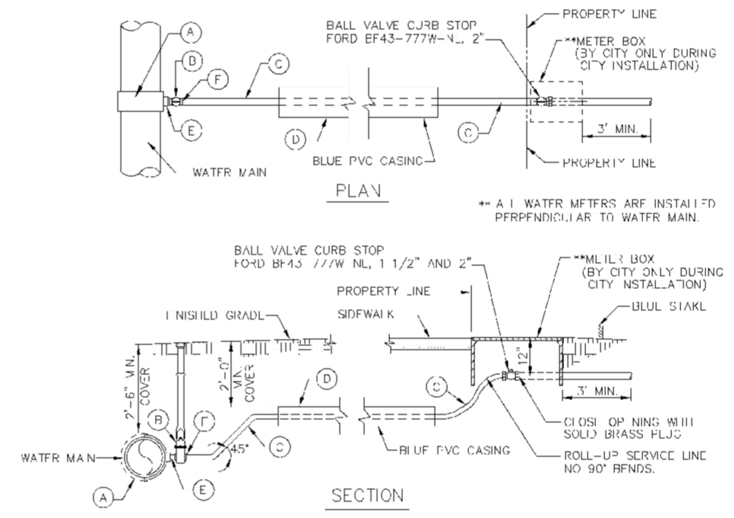

(A) 2" TAPPING SADDLE IRON PIPE THREADED FORD FC-202 OR EQUAL.
(B) 2" RESILIENT SEATED GATE VALVE CLOW F61 03 MUELLER A-23-60-8 2" OPERATING NUT BOXED TO GRADE C.I. BOX
(C) 2" POLYETHYLENE BLUE
(D) 2 1/2" SCH. 40
(E) 2" X 3" BRASS NIPPLE
(F) 2" MIP COUPLING C-84-77 - PACK JOINT - CTS

TYPICAL 1 1/2" AND 2" WATER SERVICE

ENGINEERING STANDARDS 2022

REVISIONS		ENGINEERING DIVISION CITY OF POMPANO BEACH	TYPICAL 2" WATER SERVICE
BY	DATE		
S.S.	05-2011		DATE. APRIL 2022 DWG. NO. 107-2
S.S.	05-2012		
S.S.	11 2018	SCALE: N.T.S.	
A.S.	08-2021		

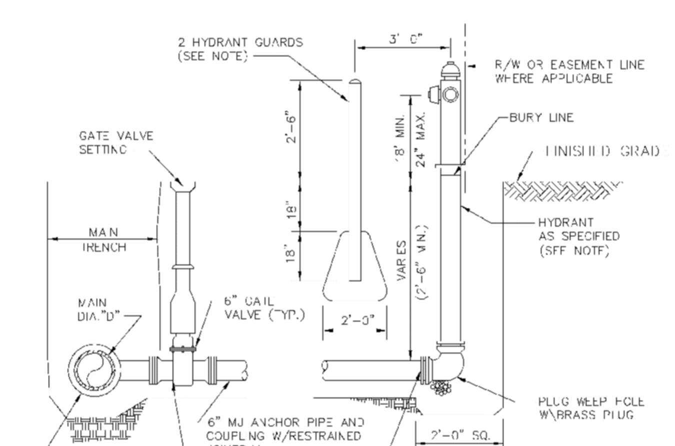

NOTES

HYDRANT GUARDS TO BE 6" DIAMETER GALVANIZED STEEL PIPE PAINTED YELLOW FILLED WITH CONCRETE. OMIT GUARDS IN LOCATIONS WHERE SIDEWALKS EXIST.

**USE 2-3/4" S.S. TIE RODS WHEN DISTANCE BETWEEN MAIN AND HYDRANT < 10'. TIE RODS WILL BE USED W/RESTRAINED JOINTS OR USE MEGALUGS AT ALL PIPE JOINTS

HYDRANTS INSTALLED ON EXISTING WATER MAINS MUST USE A MUELLER MJ DI TAPPING SLEEVE, H-615 OR APPROVED EQUAL.

HYDRANTS CONNECTED TO NEW MAINS SHALL BE CONNECTED USING A HYDRANT TEE.

ALL POMPANO BEACH HYDRANTS SHALL BE PAINTED RED.

TYPICAL FIRE HYDRANT ASSEMBLY

ENGINEERING STANDARDS 2022

REVISIONS		ENGINEERING DIVISION CITY OF POMPANO BEACH	FIRE HYDRANT ASSEMBLY
BY	DATE		
T.W.	1-2007		DATE: MAY 2022 DWG. NO. 109-1
T.W.	10-2010		
S.S.	2-2012	SCALE: N.T.S.	
S.S.	11 2012		

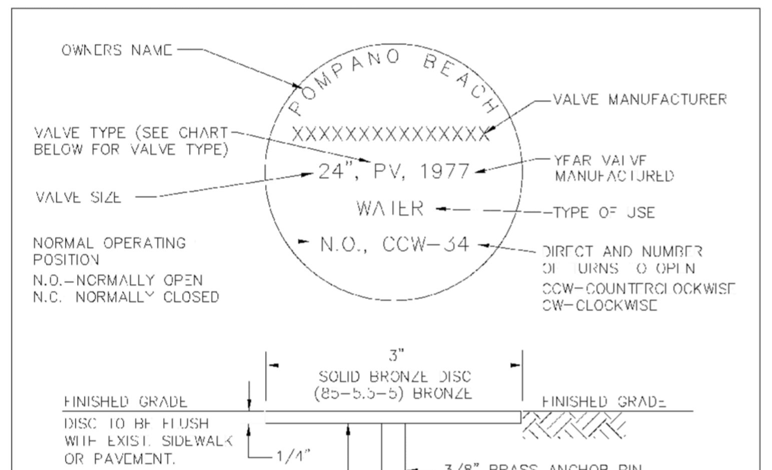

VALVE TYPES
BALL VALVE--BALLV
RESILIENT WEDGE GATE VALVE--RWGV
BUTTERFLY VALVE--BV
PLUG VALVE--PV

NOTES:

1. VALVE INFORMATION TO BE TRIPLE ENGRAVED INTO TOP SURFACE WITH 1/4" CAPITAL LETTERS.
2. ENTIRE MARKER TO BE COATED WITH CLEAR EPOXY TO PREVENT TARNISHING.
3. VALVE INFORMATION TO BE APPROVED BY CITY OF POMPANO BEACH UTILITIES DEPARTMENT.
4. MARKERS SHALL BE MANUFACTURED BY RC WRENCH, OR APPROVED EQUAL

UNDERGROUND VALVE IDENTIFICATION MARKER

ENGINEERING STANDARDS 2022

REVISIONS		ENGINEERING DIVISION CITY OF POMPANO BEACH	UNDERGROUND VALVE IDENTIFICATION MARKER
BY	DATE		
S.S.	JUNE 2005		DATE: FEB. 2022 DWG. NO. 115-1
T.W.	11-2007		
T.W.	02-2005	SCALE: N.T.S.	
S.S.	1-24-12		

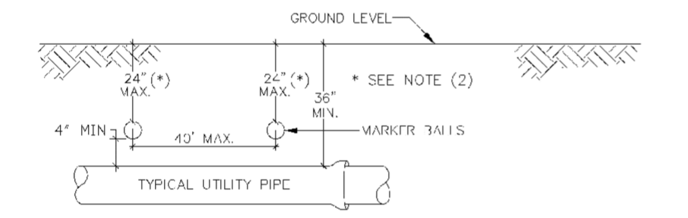

GENERAL NOTES:

1. ALL UTILITY PIPE SHALL BE INSTALLED WITH 4"ø MARKING BALLS PLACED EVERY 40' AND AT EVERY FITTING, FOR IDENTIFICATION AND WARNING PURPOSES, BURIED ABOVE THE PIPE AT A MAXIMUM DEPTH OF 24 INCHES OR AS APPROVED BY THE OWNER. IT SHALL BE COLOR CODED AND WORDED AS FOLLOWS:

   POTABLE WATER:
   A. COLOR: BLUE PER 62-555.320(21)(b)(3) F.A.C.
   B. LETTERING: WATER
   C. FREQUENCY OF MARKER BALLS SHALL BE 145.7 Khz.
   D. THE MARKER BALLS CAN BE BURIED IN ANY ORIENTATION.

   THE MARKER BALLS SHALL BE DETECTABLE BY STANDARD METAL DETECTION EQUIPMENT AND SHALL BE MANUFACTURED BY TEMPO OR 3M LOCATOR SYSTEM OR EQUIVALENT (FREQUENCY 145.7 Khz)

2. FOR LARGE DIAMETER PIPE INSTALLED AT DEPTHS BELOW 4'-0" MARKER BALLS SHALL BE PLACED AT A MAXIMUM DEPTH OF 4'-0" BELOW GRADE *.

WATER PIPE IDENTIFICATION

ENGINEERING STANDARDS 2022

REVISIONS		ENGINEERING DIVISION CITY OF POMPANO BEACH	WATER PIPE IDENTIFICATION
BY	DATE		
S.S.	01/12		DATE: JAN. 2022 DWG. NO. 119-1
S.S.	06/16	SCALE: N.T.S.	

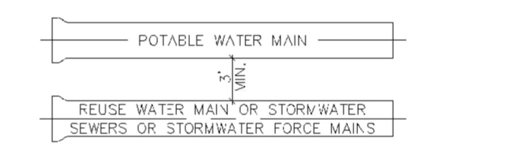

A MINIMUM HORIZONTAL SEPARATION 3' (OUTSIDE TO OUTSIDE), SHALL BE MAINTAINED BETWEEN POTABLE WATER MAINS AND STORMWATER SEWERS, STORMWATER FORCE MAINS AND REGULATED REUSE WATER MAINS.

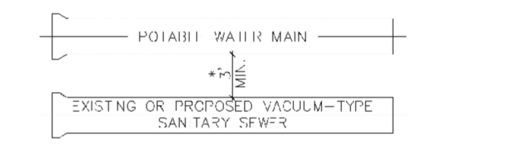

A MINIMUM HORIZONTAL SEPARATION 3' (OUTSIDE TO OUTSIDE), SHALL BE MAINTAINED BETWEEN EXISTING OR PROPOSED VACUUM-TYPE SANITARY SEWER. * SEE NOTE D(1)(B).

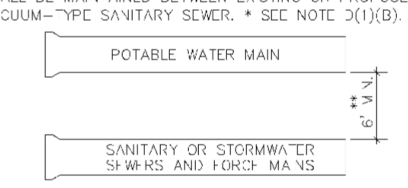

A MINIMUM HORIZONTAL SEPARATION OF 6' (OUTSIDE TO OUTSIDE), SHALL BE MAINTAINED BETWEEN POTABLE WATER MAINS AND EXISTING OR PROPOSED GRAVITY OR PRESSURE TYPE SANITARY SEWER, WASTEWATER FORCE MAIN OR NOT REGULATED REUSE WATER MAIN. ** SEE NOTE D(1)(C).

MINIMUM HORIZONTAL SEPARATION REQUIREMENTS FOR POTABLE WATER, REUSE, STORMWATER AND SEWER LINES

ENGINEERING STANDARDS 2022

REVISIONS		ENGINEERING DIVISION CITY OF POMPANO BEACH	MIN. HORIZONTAL SEPARATION FOR POTABLE WATER
BY	DATE		
S.S.	01/12		DATE: JAN. 2022 DWG. NO. 121-1
		SCALE: N.T.S.	

PROTECTION OF POTABLE WATER SUPPLY NOTES

A. GENERAL

IN ADDITION TO THESE REQUIREMENTS, ALL POTABLE WATER MAINS CONSTRUCTED IN THE VICINITY OF STORM SEWERS, SANITARY SEWERS OR FORCE MAINS SHALL COMPLY WITH THE APPLICABLE PROVISIONS OF FLORIDA ADMINISTRATIVE CODE CHAPTER 62-555, GREAT LAKES-UPPER MISSISSIPPI RIVER BOARD OF STATE SANITARY ENGINEERS (GLUMRB) "RECOMMENDED STANDARDS FOR WATER WORKS", AND GLUMRB "RECOMMENDED STANDARDS FOR WASTEWATER FACILITIES".

B. DEFINITIONS

FOR THE PURPOSES OF THIS SPECIFICATION, THE WORDS "OTHER PIPE" OR "OTHER PIPES" SHALL MEAN SANITARY SEWER MAIN, SEWAGE FORCE MAIN, STORMWATER MAIN OR ANY COMBINATION THEREOF.

C. CROSS CONNECTIONS PROHIBITED

THERE SHALL BE NO PHYSICAL CONNECTIONS BETWEEN A PUBLIC OR PRIVATE POTABLE WATER SUPPLY SYSTEM AND ANY OTHER PIPE OR APPURTENANCE THERETO WHICH WOULD PERMIT THE PASSAGE OF ANY WASTEWATER, POLLUTED WATER, OR ANY OTHER WATER INTO THE POTABLE SUPPLY. NO WATER PIPE SHALL PASS THROUGH OR COME INTO CONTACT WITH ANY PART OF A SANITARY SEWER MANHOLE OR STORMWATER MANHOLE.

D. RELATION OF OTHER PIPES TO POTABLE WATER MAINS

1. HORIZONTAL SEPARATION

A. NEW OR RELOCATED, UNDERGROUND WATER MAINS SHALL BE LAID TO PROVIDE A HORIZONTAL DISTANCE OF AT LEAST THREE FEET BETWEEN THE OUTSIDE OF THE WATER MAIN AND THE OUTSIDE OF ANY EXISTING OR PROPOSED STORM WATER, STORM WATER FORCE MAIN, OR PIPELINE CONVEYING REUSE WATER NOT REGULATED UNDER PART III OF CHAPTER 62-610,F.A.C.

B. NEW OR RELOCATED, UNDERGROUND WATER MAINS SHALL BE LAID TO PROVIDE A HORIZONTAL DISTANCE OF AT LEAST THREE FEET, AND PREFERABLY TEN FEET, BETWEEN THE OUTSIDE OF THE WATER MAIN AND THE OUTSIDE OF ANY EXISTING OR PROPOSED VACUUM TYPE SANITARY SEWER.

C. NEW OR RELOCATED, UNDERGROUND WATER MAINS SHALL BE LAID TO PROVIDE A HORIZONTAL DISTANCE OF AT LEAST SIX FEET, AND PREFERABLY TEN FEET, BETWEEN THE OUTSIDE OF THE WATER MAIN AND THE OUTSIDE OF ANY EXISTING OR PROPOSED GRAVITY-OR PRESSURE-TYPE SANITARY SEWER, WASTEWATER FORCE MAIN, OR PIPELINE CONVEYING REUSE WATER NOT REGULATED UNDER CHAPTER 62-610, F.A.C. THE MINIMUM HORIZONTAL SEPARATION DISTANCE BETWEEN WATER MAINS AND GRAVITY TYPE SEWERS SHALL BE REDUCED TO THREE FEET WHERE THE BOTTOM OF THE WATER IS LAID AT LEAST SIX INCHES ABOVE THE TOP OF THE SEWER.

ENGINEERING STANDARDS 2022

REVISIONS		ENGINEERING DIVISION CITY OF POMPANO BEACH	POTABLE WATER SUPPLY NOTES
BY	DATE		
S.S.	01/12		DATE: JAN. 2022 DWG. NO. 122-2
		SCALE: N.T.S.	

D. NEW OR RELOCATED, UNDERGROUND WATER MAINS SHALL BE LAID TO PROVIDE A HORIZONTAL DISTANCE OF AT LEAST TEN FEET BETWEEN THE OUTSIDE OF THE WATER MAIN AND ALL PARTS OF ANY EXISTING OR PROPOSED "ON-SITE SEWAGE TREATMENT AND DISPOSAL SYSTEM".

2. VERTICAL SEPARATION

A. NEW OR RELOCATED, UNDERGROUND WATER MAINS CROSSING ANY EXISTING OR PROPOSED GRAVITY-OR VACUUM-TYPE SANITARY SEWER OR STORM SEWER SHALL BE LAID SO THE OUTSIDE OF THE WATER MAIN IS AT LEAST SIX INCHES, AND PREFERABLY 12 INCHES, ABOVE OR AT LEAST 12 INCHES BELOW THE OUTSIDE OF THE OTHER PIPELINE. HOWEVER, IT IS PREFERABLE TO LAY THE WATER MAIN ABOVE THE OTHER PIPELINE.

B. NEW OR RELOCATED, UNDERGROUND WATER MAINS CROSSING ANY EXISTING OR PROPOSED PRESSURE-TYPE SANITARY SEWER, WASTEWATER OR STORM WATER FORCE MAIN, OR PIPELINE CONVEYING REUSE WATER SHALL BE LAID SO THE OUTSIDE OF THE WATER MAIN IS AT LEAST 12 INCHES, ABOVE OR BELOW THE OUTSIDE THE OTHER PIPELINE. HOWEVER, IT IS PREFERABLE TO LAY THE WATER MAIN ABOVE THE OTHER PIPELINE.

C. AT THE UTILITY CROSSINGS DESCRIBED IN PARAGRAPHS (A) AND (B) ABOVE, ONE FULL LENGTH OF WATER MAIN PIPE SHALL BE CENTERED ABOVE OR BELOW THE OTHER PIPELINE SO THE WATER MAIN JOINTS WILL BE AS FAR AS POSSIBLE FROM THE OTHER PIPELINE. ALTERNATIVELY, AT SUCH CROSSINGS, THE PIPES SHALL BE ARRANGED SO THAT ALL WATER MAIN JOINTS ARE AT LEAST THREE FEET FROM ALL JOINTS IN VACUUM-TYPE SANITARY SEWERS, STORM SEWERS, STORM WATER FORCE MAINS, OR PIPELINES CONVEYING REUSE WATER REGULATED UNDER PART III OF CHAPTER 62-610, F.A.C AND AT LEAST SIX FEET FROM ALL JOINTS IN GRAVITY- OR PRESSURE-TYPE SANITARY SEWERS, WASTEWATER FORCE MAINS, OR PIPELINES CONVEYING REUSE WATER NOT REGULATED UNDER PART III OR CHAPTER 62-610, F.A.C

WHERE THE HORIZONTAL CAN BEING LOCATED LESS THAT THE REQUIRED MINIMUM DISTANCES FROM JOINTS IN THE OTHER PIPELINE OR THE HORIZONTAL IS LESS THAT THREE FEET FROM ANOTHER PIPELINE OR THE UNDER GROUND WATER MAIN IS CROSSING ANOTHER PIPELINE AND IS LESS THAN THE REQUIRED MINIMUM VERTICAL DISTANCE FROM THE OTHER PIPELINE, THE CONTRACTOR SHALL CONTACT THE ENGINEER IMMEDIATELY FOR RECOMMENDED SOLUTIONS TO MEET THE FLORIDA U-DEPARTMENT OF ENVIRONMENTAL PROTECTION REQUIREMENTS PER CHAPTER 62-555, F.A.C.

PROTECTION OF POTABLE WATER SUPPLY NOTES

ENGINEERING STANDARDS 2022

REVISIONS		ENGINEERING DIVISION CITY OF POMPANO BEACH	POTABLE WATER SUPPLY NOTES
BY	DATE		
S.S.	01/12		DATE: JAN. 2022 DWG. NO. 122-3
		SCALE: N.T.S.	

INLET: GASKETED BELL - SDR-35 PVC

Base Casting is ASTM A-48 Class 30 Cast Iron (Various Contours available to fit 6.275" - 30.00" O.D. Mains)

PVC Adapter is an ASTM D3034, SDR 35 Gasketed Bell

Castings and Adapter cemented permanently in place with two-part urethane adhesive

Base of Saddle dip-coated in Waterbased Bituminous Coating

Strap is 24 ga. X 2.5" wide Type 304 Stainless Steel

Strap Pins are .75" dia. Type 303 Stainless Steel

T-Bolts are .375" - 16 Type 304 Stainless Steel

Nuts and Washers are Type 18-8 Stainless Steel

O-Ring is ASTM C-361-77 Tubular Polyisoprene

4" inlet requires a 4" x 6.50" oval tap in the Sewer Main

6" inlet requires a 6" x 9.25" oval tap in the Sewer Main (Sewer Main must be at least 8" dia.)

Note: This Dwg. supercedes Dwg. No. R-3157-D1

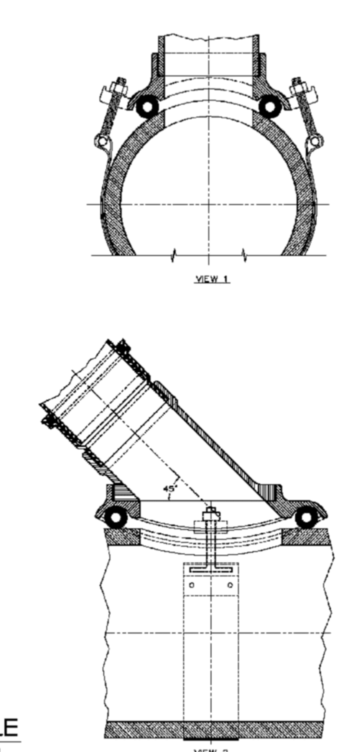

WYE GRAVITY SEWER SADDLE

TO BE USED WHEN A SEWER MAIN HAS BEEN LINED WITH A CURED IN PLACE MATERIAL.

ENGINEERING STANDARDS 2022

REVISIONS		ENGINEERING DIVISION CITY OF POMPANO BEACH	WYE GRAVITY SEWER SADDLE
BY	DATE		
			DATE: MAY 2022 DWG. NO. 201-2
		SCALE: N.T.S.	

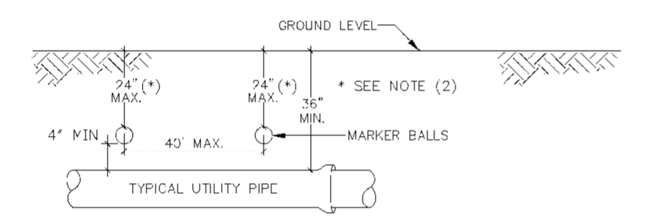

GENERAL NOTES:

1. ALL UTILITY PIPE SHALL BE INSTALLED WITH 4"ø MARKING BALLS PLACED EVERY 40' AND AT EVERY FITTING, FOR IDENTIFICATION AND WARNING PURPOSES, BURIED ABOVE THE PIPE AT A MAXIMUM DEPTH OF 24 INCHES OR AS APPROVED BY THE OWNER. IT SHALL BE COLOR CODED AND WORDED AS FOLLOWS:

   SEWER SYSTEM
   A. COLOR: GREEN
   B. LETTERING: SANITARY SEWER
   C. FREQUENCY OF MARKER BALLS SHALL BE 121.6 Khz.
   D. THE MARKER BALLS CAN BE BURIED IN ANY ORIENTATION.

   THE MARKER BALLS SHALL BE DETECTABLE BY STANDARD METAL DETECTION EQUIPMENT AND SHALL BE MANUFACTURED BY TEMPO OR 3M LOCATOR SYSTEM OR EQUIVALENT (FREQUENCY 121.6 Khz)

2. FOR LARGE DIAMETER PIPE INSTALLED AT DEPTHS BELOW 4'-0" MARKER BALLS SHALL BE PLACED AT A MAXIMUM DEPTH OF 4'-0" BELOW GRADE *.

SEWER PIPE IDENTIFICATION

ENGINEERING STANDARDS 2022

REVISIONS		ENGINEERING DIVISION CITY OF POMPANO BEACH	SEWER PIPE IDENTIFICATION
BY	DATE		
S.S.	01/30/12		DATE: JUNE 2022 DWG. NO. 207-1
		SCALE: N.T.S.	

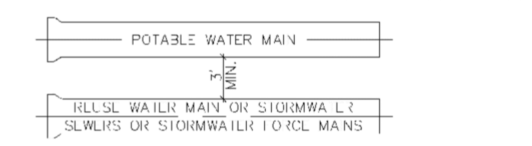

A MINIMUM HORIZONTAL SEPARATION 3' (OUTSIDE TO OUTSIDE), SHALL BE MAINTAINED BETWEEN POTABLE WATER MAINS AND STORMWATER SEWERS, STORMWATER FORCE MAINS AND REGULATED REUSE WATER MAINS.

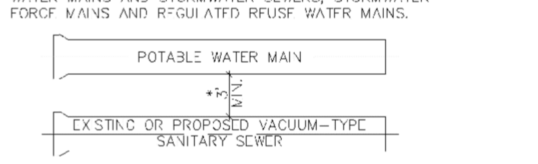

A MINIMUM HORIZONTAL SEPARATION 3' (OUTSIDE TO OUTSIDE), SHALL BE MAINTAINED BETWEEN EXISTING OR PROPOSED VACUUM TYPE SANITARY SEWER. * SEE NOTE D(1)(B).

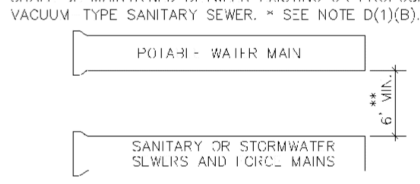

A MINIMUM HORIZONTAL SEPARATION OF 6' (OUTSIDE TO OUTSIDE), SHALL BE MAINTAINED BETWEEN POTABLE WATER MAINS AND EXISTING OR PROPOSED GRAVITY-OR PRESSURE TYPE SANITARY SEWER, WASTEWATER FORCE MAIN OR NOT REGULATED REUSE WATER MAIN. ** SEE NOTE D(1)(C).

MINIMUM HORIZONTAL SEPARATION REQUIREMENTS FOR POTABLE WATER, REUSE, STORMWATER AND SEWER LINES

ENGINEERING STANDARDS 2022

REVISIONS		ENGINEERING DIVISION CITY OF POMPANO BEACH	MIN. HORIZONTAL SEPARATION FOR SANITARY SEWER
BY	DATE		
S.S.	01/30/12		DATE: JUNE 2022 DWG. NO. 209-1
		SCALE: N.T.S.	

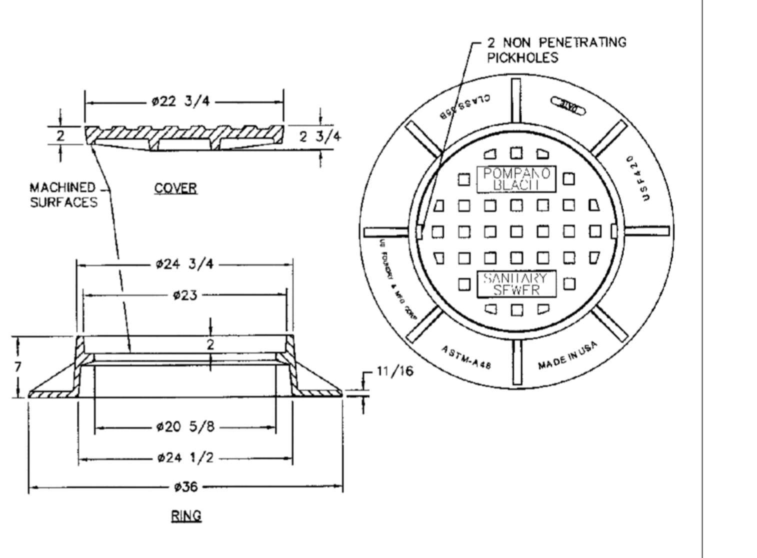

TRAFFIC RATED FRAME & COVER

ENGINEERING STANDARDS 2022

REVISIONS		ENGINEERING DIVISION CITY OF POMPANO BEACH	TRAFFIC RATED SEWER COVER
BY	DATE		
			DATE: JUNE 2022 DWG. NO. 211-1
		SCALE: N.T.S.	

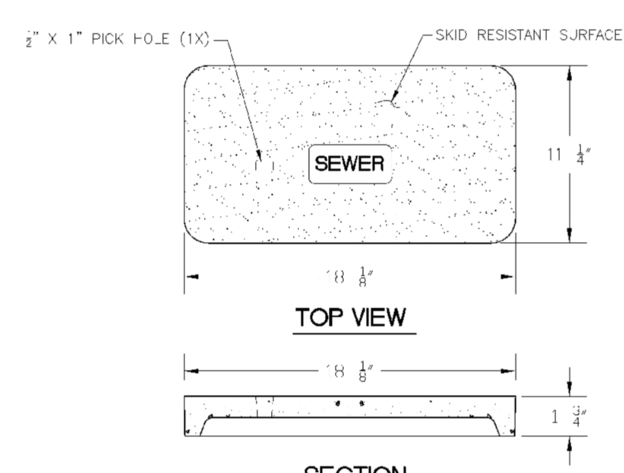

NOTE

1. MATERIAL: FIBERGLASS REINFORCED POLYMER CONCRETE & FIBERGLASS REINFORCED POLYMER
2. COLOR: GREEN
3. LOAD RATING: A8 (ASTM C857)
4. LOGO: SEWER

SEWER BOX AND COVER

PRODUCT RATING - TRAFFIC						
		DESIGN LOADS			TESTING	
LOAD DESIGNATION	DESCRIPTION	LIVE LB/WHEEL (2)	LIVE + IMPACT LB/WHEEL	SIDE PSF (3)	LOAD,LBS	SAFETY FACTOR
AASHTO H15	MEDIUM TRUCK TRAFFIC	12,000	15,600	N/A	27,000 (5)	2.25

ENGINEERING STANDARDS 2022

REVISIONS		ENGINEERING DIVISION CITY OF POMPANO BEACH	SEWER BOX AND COVER CDR Part No. W04-[illegible]-12 CDR Part No. [illegible]C02-[illegible]-02
BY	DATE		
			DATE: [illegible] 2022 DWG. NO. [illegible]0-2
		SCALE: N.T.S.	

AAC
PZ23-12000033
05/07/2024

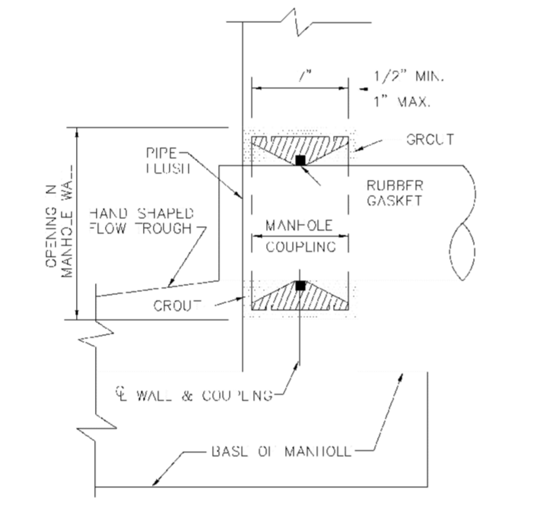

MANHOLE COUPLING

ENGINEERING STANDARDS 2022

REVISIONS		ENGINEERING DIVISION CITY OF POMPANO BEACH	MANHOLE COUPLING
BY	DATE		
S.S.	JUNE 2005		DATE: JUNE 2022 DWG. NO. 212-1
		SCALE: N.T.S.	

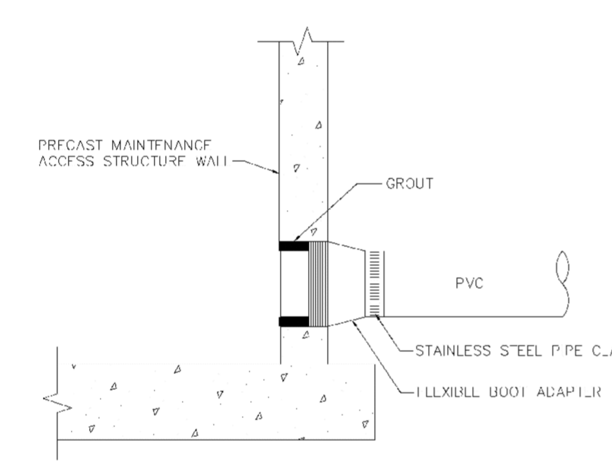

STANDARD PRECAST MAINTENANCE ACCESS STRCTURE PIPE CONNECTION

NOTE:
C.C.P.B. MAY APPROVE ALTERNATE WATER TIGHT CONNECTION.

ENGINEERING STANDARDS 2022

REVISIONS		ENGINEERING DIVISION CITY OF POMPANO BEACH	MAINTENANCE ACCESS STRUCTURE
BY	DATE		
			DATE: JUNE 2022 DWG. NO. 212-2
		SCALE: N.T.S.	

Maxwell T Kaplan

Digitally signed by Maxwell T Kaplan
DN: c=US, o=Florida, dnQualifier=A01410C0000017BEAAC643B000050D4, cn=Maxwell T Kaplan
Date: 2024.04.03 16:21:44 -04'00'

THOMAS
ENGINEERING GROUP
CIVIL ENGINEERS - PROJECT MANAGERS - LAND PLANNING - LANDSCAPE ARCHITECTS
1502 W. FLETCHER AVE. UNIT NO. 101 TAMPA, FL 33612 P: (813) 379-4100
125 W. INDIANTOWN RD. SUITE 206 JUPITER, FL 33458 P: 561-203-7503

THE INFORMATION, DESIGN AND CONTENT OF THIS PLAN ARE PROPRIETARY AND SHALL NOT BE COPIED OR USED FOR ANY PURPOSE WITHOUT PRIOR WRITTEN AUTHORIZATION FROM THOMAS ENGINEERING GROUP, LLC. ONLY APPROVED, SIGNED AND SEALED PLANS SHALL BE UTILIZED FOR CONSTRUCTION PURPOSES. © 2015 THOMAS ENGINEERING GROUP, LLC.

REVISIONS:

REV:	DATE:	COMMENT:	BY:

811 KNOW WHAT'S BELOW ALWAYS CALL 811 BEFORE YOU DIG
It's fast. It's free. It's the law.
www.callsunshine.com

PROJECT No.:	F230019
DRAWN BY:	JFV
CHECKED BY:	MTK
DATE:	
CAD I.D.:	F230019 - UTILITY DETAILS

PROJECT:

PORSCHE CHAMPION CENTER
300 W COPANS RD
FOR
CHAMPION PORSCHE

POMPANO BEACH
FLORIDA

THOMAS
ENGINEERING GROUP
6300 NW 31ST AVENUE
FORT LAUDERDALE, FL 33309
PH: (954) 202-7000
www.ThomasEngineeringGroup.com

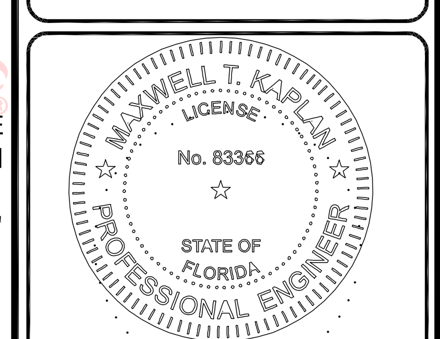

April 2, 2024
FLORIDA BUSINESS CERT. OF AUTH. No. 27528

SHEET TITLE:

UTILITY DETAILS

SHEET NUMBER:

WS-02

MAXWELL T. KAPLAN, State of Florida, Professional Engineer, License No. 83366. This item has been digitally signed and sealed by MAXWELL T. KAPLAN, P.E. on 4/2/2024 using a SHA authentication code. Printed copies of this document are not considered signed and sealed and the SHA authentication code must be verified on any electronic copies.

Printed on Tuesday, April 02, 2024, 5:57 PM by Max Kaplan