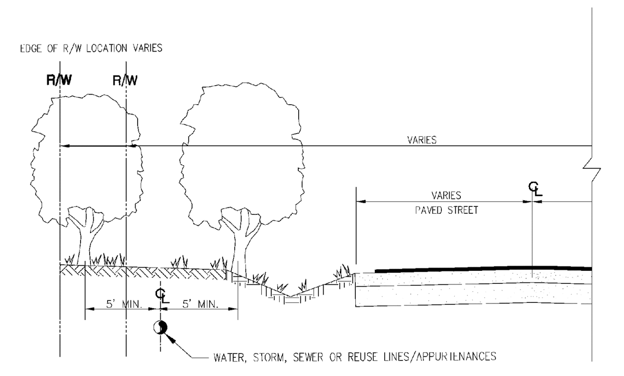

TREE LOCATIONS REQUIRED IN PUBLIC R/W ON UTILITY EASEMENTS

NOTES
PLEASE NOTE THAT AS PER CITY ORDINANCE(S) 50.02(A) (4) AND 100.35(E), STREET TREES SHALL NOT BE PLACED ON TOP OF OR 5' OF EITHER SIDE OF ANY CITY OWNED UTILITY INFRASTRUCTURE. ALSO, PLEASE NOTE THAT NO TREES SHRUBBERY OR OBSTRUCTION SHALL BE PLACED WITHIN A 3' RADIUS OF A CITY OWNED LATERAL CLEANOUT OR WATER & OR REUSE METER.

ENGINEERING STANDARDS 2022
REVISIONS | BY | DATE
ENGINEERING DIVISION CITY OF POMPANO BEACH
REQUIRED TREE LOCATIONS
APPROVED BY:
DATE: MAY 2022
DWG. NO. 316-1
SCALE: N.T.S.

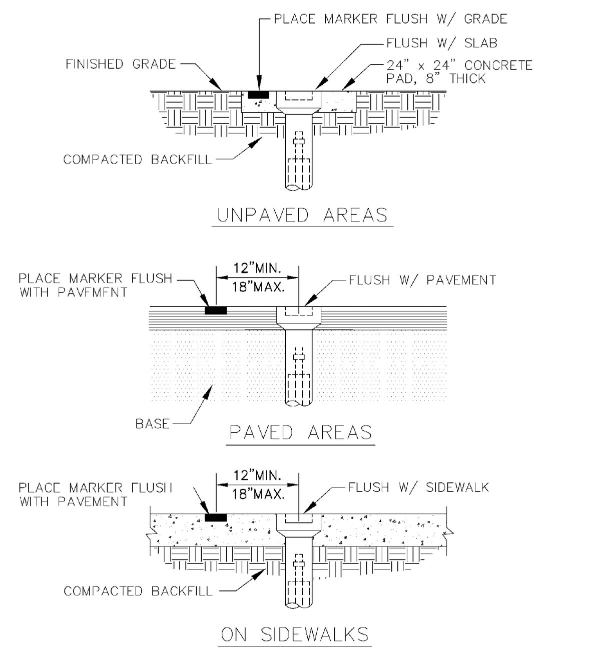

NOTE: ALL LIDS MUST SAY "REUSE WATER"

VALVE BOX SETTINGS

ENGINEERING STANDARDS 2022
REVISIONS | BY | DATE
ENGINEERING DIVISION CITY OF POMPANO BEACH
VALVE BOX SETTINGS
DATE: MAY 2022
DWG. NO. 500-1
SCALE: N.T.S.

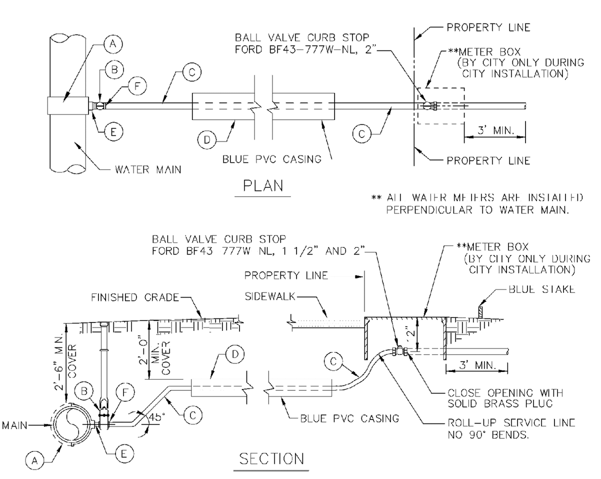

(A) 2" TAPPING SADDLE IRON PIPE THREADED FORD FC-202 OR EQUAL.
(B) 2" RESILIENT SEATED GATE VALVE CLOW F61-03 MUELLER A-23-60-8 2" OPERATING NUT BOXED TO GRADE - C.I. BOX
(C) 2" POLYETHYLENE BLUE
(D) 2 1/2" SCH. 40
(E) 2" X 3" BRASS NIPPLE
(F) 2" MIP COUPLING C-84-77 - PACK JOINT - CTS

TYPICAL 1 1/2" AND 2" WATER SERVICE

ENGINEERING STANDARDS 2022

BY	DATE
S.S.	05-2011
S.S.	05-2012
S.S.	11-2018
A.S.	08-2021

REVISIONS
ENGINEERING DIVISION CITY OF POMPANO BEACH
TYPICAL 2" WATER SERVICE
DATE: APRIL 2022
DWG. NO. 107-2
SCALE: N.T.S.

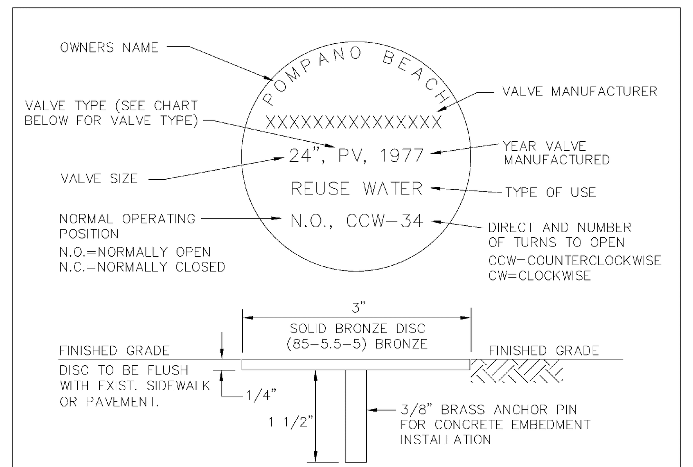

VALVE TYPES
BALL VALVE--BALLV
RESILIENT SEAT GATE VALVE--RSGV
RESILIENT WEDGE GATE VALVE--RWGV
BUTTERFLY VALVE--BV
PLUG VALVE--PV

NOTES:
1. VALVE INFORMATION TO BE ENGRAVED INTO TOP SURFACE WITH 1/4" CAPITAL LETTERS DOUBLE STAMPED.
2. ENTIRE MARKER TO BE COATED WITH CLEAR EPOXY TO PREVENT TARNISHING.
3. VALVE INFORMATION TO BE APPROVED BY CITY OF POMPANO BEACH UTILITIES DEPARTMENT.
4. MARKERS SHALL BE MANUFACTURED BY RG WRENCH OR APPROVED EQUAL.

UNDERGROUND VALVE IDENTIFICATION MARKER

ENGINEERING STANDARDS 2022

BY	DATE
S.S.	1/24/12

REVISIONS
ENGINEERING DIVISION CITY OF POMPANO BEACH
UNDERGROUND VALVE IDENTIFICATION MARKER
DATE: MAY 2022
DWG. NO. 502-1
SCALE: N.T.S.

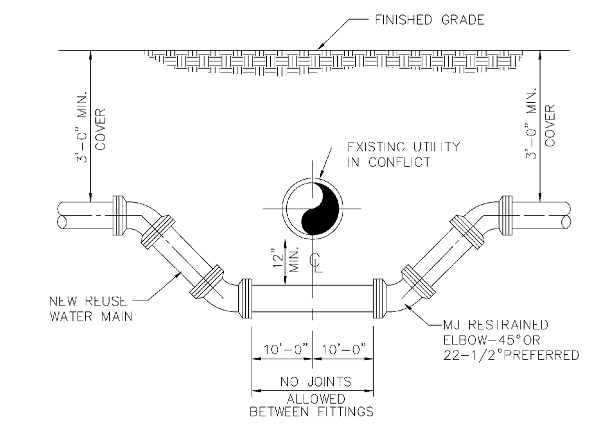

NOTES:
WHERE CONDITIONS PERMIT, PIPE DEFLECTION MAY BE USED INSTEAD OF BENDS TO OBTAIN THE MINIMUM CLEARANCE. FACTORY OFFSETS MAY BE USED ON 6" OR SMALLER MAINS AND LARGER MAINS ALSO.

TYPICAL UTILITY CONFLICT

ENGINEERING STANDARDS 2022

BY	DATE
S.S.	1/25/12

REVISIONS
ENGINEERING DIVISION CITY OF POMPANO BEACH
TYPICAL UTILITY CONFLICT
DATE: MAY 2022
DWG. NO. 503-1
SCALE: N.T.S.

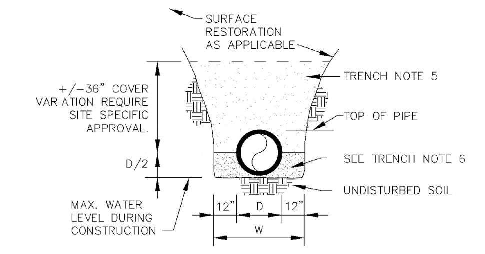

TRENCH BACKFILL / BEDDING CLASS " A "

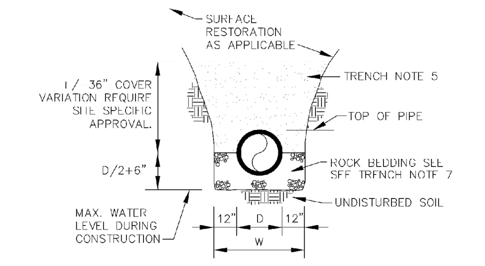

TRENCH BACKFILL / BEDDING CLASS " B "

ENGINEERING STANDARDS 2022
REVISIONS | BY | DATE
ENGINEERING DIVISION CITY OF POMPANO BEACH
TRENCH BACKFILL / BEDDING
DATE: MAY 2022
DWG. NO. 504-1
SCALE: N.T.S.

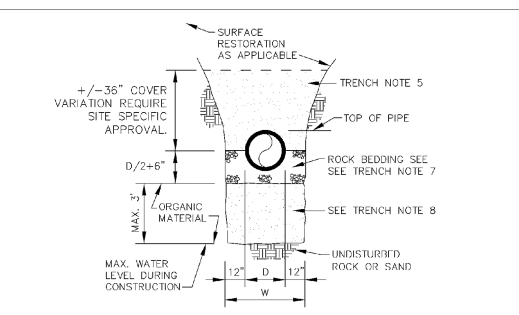

TRENCH BACKFILL / BEDDING CLASS " C "

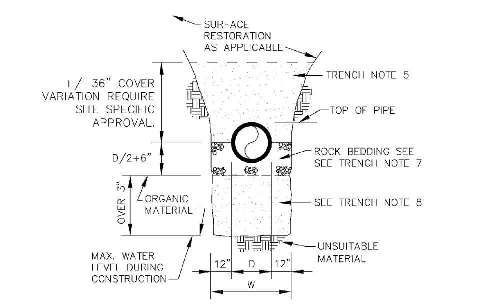

TRENCH BACKFILL / BEDDING CLASS " D "

ENGINEERING STANDARDS 2022
REVISIONS | BY | DATE
ENGINEERING DIVISION CITY OF POMPANO BEACH
TRENCH BACKFILL / BEDDING
DATE: MAY 2022
DWG. NO. 504-2
SCALE: N.T.S.

TRENCH BACKFILL / BEDDING NOTES

1. OUTLINE OF TRENCH EXCAVATION IS FOR ILLUSTRATIVE PURPOSES ONLY. ACTUAL TRENCH WIDTH AND SHAPE WILL VARY WITH SOIL CONDITIONS. TRENCH EXCAVATION SHALL BE IN ACCORDANCE WITH THE "FLORIDA TRENCH SAFETY ACT" AND OSHA TRENCH SAFETY STANDARDS.
2. TYPICAL TRENCH BACKFILL/BEDDING FOR REUSE WATER MAIN AND FORCE MAIN INSTALLATIONS SHALL BE CLASS "A" AS SHOWN IN DETAIL.
3. TYPICAL TRENCH BACKFILL/BEDDING FOR GRAVITY SEWER INSTALLATION SHALL BE CLASS "B" AS SHOWN IN DETAIL.
4. TRENCH BACKFILL/BEDDING CLASS "C" AND CLASS "D" SHALL BE USED FOR PIPE INSTALLATIONS WHERE UNSUITABLE TRENCH MATERIALS ARE ENCOUNTERED.
5. TRENCH ZONE BACKFILL SHALL BE MATERIAL TYPE 1 OR TYPES A THRU H, OR ANY MIXTURE THEREOF, WHERE SURFACE RESTORATION TYPE "1" IS APPLICABLE, TRENCH ZONE BACKFILL SHALL BE PLACED IN 12" LIFTS, COMPACTED TO 90% OF THE MATERIAL'S MAXIMUM DENSITY AS DETERMINED BY ASTM D-697 (AASHTO T-99). WHERE SURFACE RESTORATION TYPES "2", "3" AND "4" ARE APPLICABLE, TRENCH BACKFILL SHALL BE PLACED IN 8" LIFTS COMPACTED TO 98% OF THE MATERIAL'S DENSITY AS DETERMINED BY ASTM D-698 (AASHTO T-99).
6. BEDDING MATERIAL FOR TYPICAL REUSE WATER MAIN INSTALLATION SHALL BE TYPE C. BEDDING SHALL BE COMPACTED TO 95% OF THE MATERIAL'S MAXIMUM DENSITY AS DETERMINED BY ASTM D-1557 (AASHTO T-180).
7. BEDDING MATERIAL FOR TYPICAL GRAVITY SEWER INSTALLATION AND ANY INSTALLATION WHERE UNSUITABLE TRENCH BOTTOM CONDITIONS ARE FOUND SHALL BE TYPE E. BEDDING SHALL BE PLACED IN LIFTS NOT TO EXCEED 6" AND COMPACTED TO 95% OF THE MATERIAL'S MAXIMUM DENSITY AS DETERMINED BY ASTM D 1557 (AASHTO T 180).
8. UNSUITABLE MATERIAL SHALL BE REMOVED TO UNDISTURBED ROCK OR SAND OR TO DEPTH AS SPECIFIED BY ENGINEER. BACKFILL MATERIAL SHALL BE TYPE C. BACKFILL SHALL BE PLACED IN 8" LIFTS COMPACTED TO 95% OF THE MATERIAL'S MAXIMUM DENSITY AS DETERMINED BY ASTM D-1557 AASHTO T-180).

ENGINEERING STANDARDS 2022
REVISIONS | BY | DATE
ENGINEERING DIVISION CITY OF POMPANO BEACH
TRENCH BACKFILL / BEDDING
DATE: MAY 2022
DWG. NO. 504-3
SCALE: N.T.S.

9. BEDDING TYPES - THE FOLLOWING TYPES OF SUITABLE MATERIALS ARE DESIGNATED AND DEFINED AS FOLLOWING:

TYPE A: CRUSHED LIMEROCK OR SAND WITH 100 PERCENT PASSING A 1 INCH SIEVE AND A SAND EQUIVALENT VALUE NOT LESS THAN 50.

TYPE B: CRUSHED LIMEROCK OR SAND WITH 100 PERCENT PASSING A 1/2 INCH SIEVE AND A SAND EQUIVALENT VALUE NOT LESS THAN 50.

TYPE C: SAND WITH 100 PERCENT PASSING A 3/8 INCH SIEVE, AT LEAST 90 PERCENT PASSING A NUMBER 4 SIEVE, AND A SAND EQUIVALENT VALUE NOT LESS THAN 30.

TYPE D: CRUSHED LIMEROCK WITH 100 PERCENT PASSING A 1 INCH SIEVE AND NOT MORE THAN 10 PERCENT A NUMBER 4 SIEVE.

TYPE E: CRUSHED LIMEROCK OR SAND WITH 100 PERCENT PASSING A 3/4 INCH SIEVE AND NOT MORE THAN 10 PERCENT PASSING A NUMBER 4 SIEVE.

TYPE F: CRUSHED LIMEROCK MEETING THE FOLLOWING GRADATION REQUIREMENTS.

SIEVE SIZE	PERCENTAGE PASSING
2 INCH	100
1-1/2 INCH	90-100
1 INCH	20-55
3/4 INCH	0-15
NO. 200	0-3

TRENCH BACKFILL / BEDDING NOTES

ENGINEERING STANDARDS 2022
REVISIONS | BY | DATE
ENGINEERING DIVISION CITY OF POMPANO BEACH
TRENCH BACKFILL / BEDDING
DATE: MAY 2022
DWG. NO. 504-4
SCALE: N.T.S.

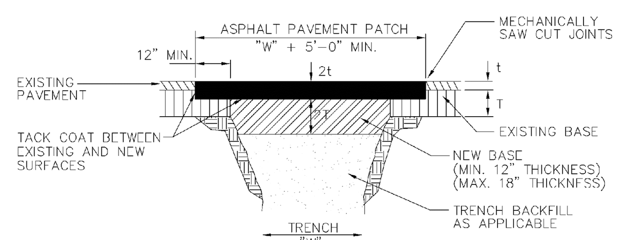

PERPENDICULAR ROAD CROSSINGS (TYPE III)

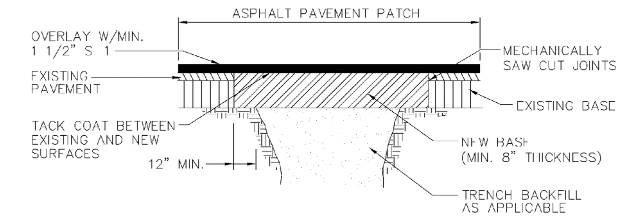

STANDARD PARALLEL ROAD RESTORATION (TYPE IV)

SURFACE RESTORATION

ENGINEERING STANDARDS 2022
REVISIONS | BY | DATE
ENGINEERING DIVISION CITY OF POMPANO BEACH
SURFACE RESTORATION
DATE: MAY 2022
DWG. NO. 505-1
SCALE: N.T.S.

Stephen Botek
Digitally signed by Stephen Botek
Date: 2024.02.27 13:17:15 -05'00'

BTE REF DATE: 2-21-2024

REVISIONS
#	DATE

STEPHEN F. BOTEK LICENSE No. 55335 STATE OF FLORIDA PROFESSIONAL ENGINEER
February 27, 2024

THIS DOCUMENT HAS BEEN DIGITALLY SIGNED AND SEALED BY STEPHEN F. BOTEK, P.E. ON THE DATE ADJACENT TO THE SEAL.

PRINTED COPIES OF THIS DOCUMENT ARE NOT CONSIDERED SIGNED AND SEALED AND THE SIGNATURE MUST BE VERIFIED ON ANY ELECTRONIC COPIES.

Celebrating 15 Years

WATER AND SANITARY SEWER DETAILS

POMPANO HOTEL
101 SOUTH OCEAN BOULEVARD
POMPANO BEACH, FL

Botek Thurlow Engineering, Inc.
3409 NW 9th Avenue, Suite 1102, Ft. Lauderdale, FL 33309
www.botekthurlow-eng.com p: 954-568-0888 f: 954-568-0757

BTE PROJECT #: 23-0701

PROJECT DATE: 09-05-2023

SHEET #: C-6

AAC
PZ23-12000042
05/07/2024