LEGAL DESCRIPTION :

PARCEL I: (HERITAGE POMPANO SQUARE, LP, A DELAWARE LIMITED PARTNERSHIP)

COMMENCING AT THE INTERSECTION OF THE NORTH LINE OF THE SOUTH ONE-HALF (S 1/2) OF THE NORTHWEST ONE-QUARTER (NW 1/4) OF THE NORTHWEST ONE-QUARTER (NW 1/4) OF SECTION 30, TOWNSHIP 48 SOUTH, RANGE 43 EAST, AND THE WEST RIGHT-OF-WAY LINE OF U.S. HIGHWAY NO. 1, ACCORDING TO THE FLORIDA STATE AND ROAD DEPARTMENT RIGHT-OF-WAY MAP FOR ROAD (4) 5 (U.S. NO. 1), SHEET 3, STATE SECTION 8602, REVISED THROUGH MAY 8, 1951; THENCE DUE SOUTH (ON AN ASSUMED BEARING) ALONG THE SAID WEST RIGHT-OF-WAY LINE 204.06 FEET; THENCE DUE WEST 145 FEET TO A POINT OF CURVATURE OF A CURVE TO THE RIGHT, SAID CURVE HAVING A CENTRAL ANGLE OF 6 DEGREES 47 MINUTES 30 SECONDS AND A RADIUS OF 882.63 FEET; THENCE CONTINUING ALONG SAID CURVE TO THE RIGHT FOR AN ARC DISTANCE OF 104.62 FEET TO A POINT OF TANGENCY; THENCE NORTH 83 DEGREES 12 MINUTES 30 SECONDS WEST ALONG A LINE TANGENT TO THE LAST DESCRIBED CURVE 170.40 FEET TO A POINT OF CURVATURE OF A CURVE TO THE LEFT, SAID CURVE HAVING A CENTRAL ANGLE OF 15 DEGREES 10 MINUTES 30 SECONDS AND A RADIUS OF 710.71 FEET; THENCE CONTINUE ALONG SAID CURVE TO THE LEFT FOR AN ARC DISTANCE OF 188.23 FEET TO A POINT OF TANGENCY; THENCE SOUTH 81 DEGREES 37 MINUTES 00 SECONDS WEST ALONG A LINE 90 FEET SOUTH OF AND PARALLEL TO THE NORTH LINE OF THE SOUTH ONE-HALF (S 1/2) OF THE NORTHWEST ONE-QUARTER (NW 1/4) OF THE NORTHWEST ONE-QUARTER (NW 1/4) OF SAID SECTION 30 FOR A DISTANCE OF 316.03 FEET; THENCE SOUTH 81 DEGREES 43 MINUTES 06 SECONDS WEST ALONG A LINE 90 FEET SOUTH OF AND PARALLEL TO THE NORTH LINE OF THE SOUTH ONE-HALF (S 1/2) OF THE NORTHEAST ONE-QUARTER (NE 1/4) OF THE NORTHEAST ONE-QUARTER (NE 1/4) OF SECTION 25, TOWNSHIP 48 SOUTH, RANGE 42 EAST, 113.71 FEET TO THE POINT OF BEGINNING; THENCE CONTINUE ON THE LAST DESCRIBED COURSE 598.12 FEET; THENCE DUE SOUTH 216.13 FEET; THENCE DUE EAST 248.31 FEET; THENCE DUE SOUTH 551.91 FEET; THENCE DUE EAST 403.00 FEET; THENCE DUE NORTH 215.91 FEET; THENCE DUE EAST 24.00 FEET; THENCE DUE NORTH 132.00 FEET; THENCE DUE EAST 198.00 FEET; THENCE DUE SOUTH 516.00 FEET; THENCE DUE EAST 319.00 FEET; THENCE DUE NORTH 470.00 FEET; THENCE DUE WEST 159.00 FEET; THENCE DUE NORTH 218.00 FEET; THENCE DUE WEST 239.00 FEET; THENCE DUE NORTH 30.00 FEET; THENCE DUE WEST 202.43 FEET; THENCE DUE NORTH 304.28 FEET TO THE POINT OF BEGINNING.

SAID LANDS SITUATE, LYING AND BEING IN BROWARD COUNTY, FLORIDA.

PARCEL II:

THE RECIPROCAL AND NON-EXCLUSIVE RIGHTS, EASEMENTS, PRIVILEGES OF USE, INGRESS AND EGRESS, PARKING AND FOR UTILITY AND OTHER PURPOSES CREATED AND GRANTED TO AS AN APPURTENANCE TO PARCEL I HEREIN, IN AND BY THAT CERTAIN: "DEVELOPMENT AND OPERATING AGREEMENT" DATED THE 7TH DAY OF NOVEMBER, 1967,BY AND BETWEEN LEONARD L. FARBER COMPANY, INC., SEARS ROEBUCK & CO., FEDERATED DEPARTMENT STORES, INC., J.C. PENNY COMPANY; ALSTORES REALTY CORPORATION AND JORDAN MARSH COMPANY, NOTICE TO PUBLIC OF SAME RECORDED ON MAY 8, 1968, IN OFFICIAL RECORDS BOOK 3659, AT PAGE 1, A REAFFIRMATION OF WHICH WAS RECORDED IN OFFICIAL RECORDS BOOK 3659, PAGE 29, PUBLIC RECORDS OF BROWARD COUNTY, FLORIDA;

FIRST AMENDMENT TO DEVELOPMENT AND OPERATING AGREEMENT DATED AS ;OF THE 8TH DAY OF MAY, 1968, AND RECORDED ON THE 6TH DAY OF SEPTEMBER, 1968, IN OFFICIAL RECORDS BOOK 3742, AT PAGE 93, PUBLIC RECORDS OF BROWARD COUNTY, FLORIDA;

SECOND AMENDMENT TO DEVELOPMENT AND OPERATING AGREEMENT DATED AS OF THE 30TH DAY OF APRIL, 1969, AND RECORDED ON THE 25TH DAY OF AUGUST, 1969, IN OFFICIAL RECORDS BOOK 4008, PAGE 393, PUBLIC RECORDS OF BROWARD COUNTY, FLORIDA;

AND

CONFIRMATORY AGREEMENT DATED APRIL 24, 1970, AND RECORDED MAY 15, 1970, IN OFFICIAL RECORDS BOOK 4211, AT PAGE 564, PUBLIC RECORDS OF BROWARD COUNTY, FLORIDA, AS ASSIGNED IN OFFICIAL RECORDS BOOK 6959, PAGE 858; AS FURTHER ASSIGNED IN OFFICIAL RECORDS BOOK 8700, PAGE 856; AND AS FURTHER ASSIGNED IN OFFICIAL RECORDS BOOK 11964, PAGE 59.

(ALTOGETHER HEREINAFTER CALLED "DEVELOPMENT AND OPERATING AGREEMENT") IN, ON, OVER, UPON AND UNDER THE FOLLOWING DESCRIBED LANDS:

COMMENCING AT THE INTERSECTION OF THE NORTH LINE OF THE SOUTH ONE-HALF (S 1/2) OF THE NORTHWEST ONE-QUARTER (NW 1/4) OF THE NORTHWEST ONE-QUARTER (NW 1/4) OF SECTION 30, TOWNSHIP 48 SOUTH, RANGE 43 EAST, AND THE WEST RIGHT-OF-WAY LINE OF U.S. HIGHWAY NO. 1, ACCORDING TO THE FLORIDA STATE ROAD DEPARTMENT RIGHT-OF-WAY MAP FOR ROAD (4) 5 (U.S. NO. 1), SHEET 3, STATE SECTION 8602, REVISED THROUGH MAY 8, 1951; THENCE SOUTH ALONG THE WEST RIGHT-OF-WAY LINE 204.06 FEET TO THE POINT OF BEGINNING; THENCE CONTINUE ALONG THE LAST DESCRIBED COURSE 1,540 FEET; THENCE 81 DEGREES 37 MINUTES 00 SECONDS TO THE RIGHT FROM THE PROLONGATION OF THE LAST DESCRIBED COURSE 600 FEET; THENCE 42 DEGREES 37 MINUTES 02 SECONDS TO THE RIGHT FROM THE PROLONGATION OF THE LAST DESCRIBED COURSE 900 FEET; THENCE 39 DEGREES 24 MINUTES 34 SECONDS TO THE LEFT FROM THE PROLONGATION OF THE LAST DESCRIBED COURSE 656.86 FEET; THENCE 95 DEGREES 54 MINUTES 52 SECONDS TO THE RIGHT FROM THE PROLONGATION OF THE LAST DESCRIBED COURSE 1,003.88 FEET; THENCE 80 DEGREES 58 MINUTES 46 SECONDS TO THE RIGHT FROM THE PROLONGATION OF THE LAST DESCRIBED COURSE ALONG A LINE 90 FEET SOUTH OF AND PARALLEL TO THE NORTH LINE OF THE SOUTH ONE-HALF (S 1/2) OF THE NORTHEAST ONE-QUARTER (NE 1/4) OF THE NORTHEAST ONE-QUARTER (NE 1/4) OF SECTION 25, TOWNSHIP 48 SOUTH, RANGE 42 EAST, 1,071.17 FEET; THENCE 0 DEGREE, 06 MINUTES 06 SECONDS TO THE LEFT FROM A PROLONGATION OF THE LAST DESCRIBED COURSE ALONG A LINE 90 FEET SOUTH OF AND PARALLEL TO THE NORTH LINE OF THE SOUTH ONE-HALF (S 1/2) OF THE NORTHWEST ONE-QUARTER (NW 1/4) OF THE NORTHWEST ONE-QUARTER (NW 1/4) OF SAID SECTION 30 FOR A DISTANCE OF 316.03 FEET TO A POINT OF CURVATURE OF A CURVE TO THE RIGHT, SAID CURVE HAVING A CENTRAL ANGLE OF 15 DEGREES 10 MINUTES 30 SECONDS AND A RADIUS OF 710.71 FEET; THENCE CONTINUE ALONG SAID CURVE TO THE RIGHT FOR AN ARC DISTANCE OF 188.23 FEET TO A POINT OF TANGENCY; THENCE CONTINUE ALONG A LINE TANGENT TO THE LAST DESCRIBED CURVE 170.40 FEET TO A POINT OF CURVATURE OF A CURVE TO THE LEFT, SAID CURVE HAVING A CENTRAL ANGLE OF 6 DEGREES 47 MINUTES 30 SECONDS AND A RADIUS OF 882.63 FEET; THENCE CONTINUE ALONG SAID CURVE TO THE LEFT FOR AN ARC DISTANCE OF 104.62 FEET TO A POINT OF TANGENCY; THENCE CONTINUE ALONG A LINE TANGENT TO THE LAST DESCRIBED CURVE 145 FEET TO THE POINT OF BEGINNING.

LESS AND EXCEPT PARCEL I AS DESCRIBED ABOVE.

SAID LANDS, SITUATE, LYING AND BEING IN BROWARD COUNTY, FLORIDA.

PARCEL I: (SEARS, ROEBUCK AND CO, A NEW YORK CORPORATION)

COMMENCING AT THE INTERSECTION OF THE NORTH LINE OF THE SOUTH ONE-HALF (S 1/2) OF THE NORTHWEST ONE-QUARTER (NW 1/4) OF THE NORTHWEST ONE-QUARTER (NW 1/4) OF SECTION 30, TOWNSHIP 48 SOUTH, RANGE 43 EAST, AND THE WEST RIGHT-OF-WAY LINE OF U.S. HIGHWAY NO. 1 ACCORDING TO THE FLORIDA STATE ROAD DEPARTMENT RIGHT-OF-WAY MAP FOR ROAD (4) 5 (U.S. NO. 1), SHEET 3, STATE SECTION 8602, REVISED THROUGH 5/8/51; THENCE DUE SOUTH (ON AN ASSUMED BEARING) ALONG THE SAID WEST RIGHT-OF-WAY LINE 204.06 FEET TO THE POINT OF BEGINNING; THENCE CONTINUE ALONG THE LAST DESCRIBED COURSE 1,019.00 FEET; THENCE DUE WEST 431.00 FEET; THENCE DUE NORTH 428.00 FEET; THENCE DUE WEST 159.00 FEET; THENCE DUE NORTH 218.00 FEET; THENCE DUE WEST 239.00 FEET; THENCE DUE NORTH 30.00 FEET; THENCE DUE WEST 202.43 FEET; THENCE DUE NORTH 304.28 FEET; THENCE NORTH 81°43'06" EAST ALONG A LINE 90.00 FEET SOUTH OF AND PARALLEL TO THE NORTH LINE OF THE SOUTH ONE-HALF (S 1/2) OF THE NORTHEAST ONE-QUARTER (NE 1/4) OF THE NORTHEAST ONE-QUARTER (NE 1/4) OF SECTION 25, TOWNSHIP 48 SOUTH, RANGE 42 EAST, 113.71 FEET; THENCE NORTH 81°37'00" EAST ALONG A LINE 90 FEET SOUTH OF AND PARALLEL TO THE NORTH LINE OF THE SOUTH ONE-HALF (S 1/2) OF THE NORTHWEST ONE-QUARTER (NW 1/4) OF THE NORTHWEST ONE-QUARTER (NW 1/4) OF SAID SECTION 30 FOR A DISTANCE OF 316.03 FEET TO A POINT OF CURVATURE OF A CURVE TO THE RIGHT, SAID CURVE HAVING A CENTRAL ANGLE OF 15°10'30" AND A RADIUS OF 710.71 FEET; THENCE CONTINUE ALONG SAID CURVE TO THE RIGHT FOR AN ARC DISTANCE OF 188.23 FEET TO A POINT OF TANGENCY; THENCE SOUTH 83°12'30" EAST ALONG A LINE TANGENT TO THE LAST DESCRIBED CURVE 170.40 FEET TO A POINT OF CURVATURE OF A CURVE TO THE LEFT, SAID CURVE HAVING A CENTRAL ANGLE OF 6°47'30" AND A RADIUS OF 882.63 FEET; THENCE CONTINUE ALONG SAID CURVE TO THE LEFT FOR AN ARC DISTANCE OF 104.62 FEET TO A POINT OF TANGENCY; THENCE DUE EAST ALONG A LINE TANGENT TO THE LAST DESCRIBED CURVE 145.00 FEET TO THE POINT OF BEGINNING. LESS AND EXCEPT THAT PORTION DEEDED TO BROWARD COUNTY, A BODY CORPORATE AND POLITICAL SUBDIVISION OF THE STATE OF FLORIDA, AS DESCRIBED IN QUIT-CLAIM DEED RECORDED IN OFFICIAL RECORDS BOOK 19241, PAGE 955, OF THE PUBLIC RECORDS OF BROWARD COUNTY, FLORIDA, FOR ROAD RIGHT-OF-WAY.

SAID LANDS SITUATE, LYING, AND BEING IN BROWARD COUNTY, FLORIDA.

PARCEL I: (EQUITY ONE PROPERTIES, INC., A FLORIDA CORPORATION)

COMMENCING AT THE INTERSECTION OF THE NORTH LINE OF THE SOUTH 1/2 OF THE NORTHWEST 1/4 OF THE NORTHWEST 1/4 OF SECTION 30, TOWNSHIP 48 SOUTH, RANGE 43 EAST, AND THE WEST RIGHT-OF-WAY OF U.S. HIGHWAY NO. 1 ACCORDING TO THE FLORIDA STATE ROAD DEPARTMENT RIGHT-OF-WAY MAP FOR ROAD (4) 5 (U.S. NO. 1), SHEET 3, STATE SECTION 8602, REVISED THROUGH MAY 8, 1951; THENCE DUE SOUTH (ON AN ASSUMED BEARING) ALONG SAID WEST RIGHT-OF-WAY LINE 1223.06 FEET TO THE POINT OF BEGINNING; THENCE CONTINUE ALONG THE LAST DESCRIBED COURSE 480.57 FEET; THENCE SOUTH 81°37'00" WEST 590.29 FEET; THENCE NORTH 55°45'58" WEST 380.43 FEET; THENCE DUE NORTH 343.61 FEET; THENCE DUE EAST 148.51 FEET; THENCE SOUTH 33.00 FEET; THENCE DUE EAST 319.00 FEET; THENCE DUE NORTH 42.00 FEET; THENCE DUE EAST 431.00 FEET TO THE POINT OF BEGINNING..

EXCEPT THAT PORTION THAT FOLLOWS:

A PORTION OF THE NORTHWEST 1/4 SECTION 30, TOWNSHIP 48 SOUTH, RANGE 43 EAST, BROWARD COUNTY, FLORIDA, LYING WESTERLY OF STATE ROAD 5, BEING MORE PARTICULARY DESCRIBED AS FOLLOWS: COMMENCE AT THE NORTHWEST CORNER OF SAID SECTION 30; RUNNING THENCE NORTH 88°34'05Δ EAST ALONG THE NORTH LINE OF SAID SECTION FOR A DISTANCE OF 1067.71 FEET TO A POINT OF INTERSECTION WITH THE BASE LINE FOR SATE ROAD 5 AS SHOWN ON THE STATE DEPARTMENT OF TRANSPORTATION RIGHT OF WAY MAP FOR SATE ROAD 5, PROJECT SECTION 86020-2525, BROWARD COUNTY, FLORIDA, SAID BAES LINE BEING 33.00 FEET EASTERLY AND PARALLEL WITH THE EXSITING WESTERLY RIGHT OF WAY OF THE 120.00 FOOT WIDE RIGHT OF WAY FOR SATE ROAD 5, SAID POINT OF INTERSECTION BEING BASE LINE STATION 1115+18.49; RUNNING THENCE SOUTH 06°49'35Δ WEST ALONG SAID BASE LINE FOR A DISTANCE OF 2036.49 FEET TO BASE LINE STATION 1094+82.00; RUNNING THENCE NORTH 83°10'25Δ WEST FOR A DISTANCE OF 33.00 FEET TO A POINT ON SAID WESTERLY RIGHT OF WAY LINE OF STATE ROAD 5 AND THE POINT OF BEGINNING OF THE HEREIN DESCRIBED PARCEL; RUNNING THENCE SOUTH 10°38'26Δ WEST FOR A DISTANCE OF 150.33 FEET TO A POINT ON AL INE 10 .00 FEET WESTERLY OF AND PARALLEL WITH SAID WESTERLY RIGHT OF WAY LINE OF STATE ROAD 5; RUNNING THENCE SOUTH 06°49'35Δ WEST ALONG A LINE 10.00 FEET WESTERLY OF AND PARALLEL WITH SAID WESTERLY RIGHT OF WAY LINE STATE ROAD 5 FOR A DISTANCE OF 144.00 FEET; RUNNING THENCE SOUTH 83°10'25Δ EAST FOR A DISTANCE OF 10.00 FEET TO A POINT ON THE SAID WESTERLY RIGHT OF WAY LINE OF STATE ROAD 5; RUNNING THENCE NORHT 06°49'35Δ EAST ALONG SAID WESTERLY RIGHT OF WAY LINE OF STATE ROAD 5 FOR A DISTANCE OF 294.00 FEET TO A POINT OF BEGINNING.

PARCEL 2

EASEMENTS (S) FOR THE BENEFIT OF PARCEL 1 AS CREATED BY DEVELOPMENT AND OPERATING AGREEMENT DATED NOVEMBER 7, 1967 BY AND AMONG LEONARD L. FARBER COMPANY, INC., SEARS, ROEBUCK AND COMPANY, FEDERATED DEPARTMENT STORES, INC., J.C. PENNY COMPANY, ALSTORES REALTY CORPORATION, AND JORDAN MARSH COMPANY, A NOTICE TO THE PUBLIC OF DEVELOPMENT AND OPERATING AGREEMENT FILED MAY 8, 1968 IN OFFICAL RECORDS BOOK 3659, AT PAGE 29, AS AMENDED IN OFFICAL RECORDS BOOK 3742, AT PAGE 93 AND OFFICAL RECORDS BOOK 4008, AT PAGE 393, HAVING BEEN ASSIGNED BY ASSIGNMENT AND ASSUMPTION OF OPERATING AGREEMENT DATED AS OF SEPTEMBER 25, 1991 IN BOOK 18771, PAGE. 1, IN BROWARD COUNTY FLORIDA RECORDS, FOR THE PURPOSES DESCRIBED IN SAID EASEMENTS, OVER, UNDER AND ACROSS THE LANDS DESCRIBED IN SAID EASEMENTS. SUBJECT TO THE TERMS, PROVISIONS AND CONDITIONS CONTAINTED IN SAID INSTRUMENTS.

PARCEL 3: (JC PENNY COMPANY, INC., A DELAWARE CORPORATION)

COMMENCING AT THE INTERSECTION OF THE NORTH LINE OF THE SOUTH ONE-HALF (S ½) OF THE NORTHWEST ONE-QUARTER (NW 1/4) OF THE NORTHWEST ONE-QUARTER (NW 1/4) OF SECTION 30, TOWNSHIP 48 SOUTH, RANGE 43 EAST, AND THE WEST RIGHT-OF-WAY LINE OF U.S. HIGHWAY NO. 1 ACCORDING TO THE FLORDIA STATE ROAD DEPARTMENT RIGHT-OF-WAY MAP FOR ROAD (4) 5 (U.S. NO. 1), SHEET 3, STATE SECTION 8602, REVISED THROUGH 5/8/51; THENCE DUE SOUTH (ON AN ASSUMED BEARING) ALONG THE SAID WEST RIGHT-OF-WAY LINE 1703.63 FEET TO THE POINT OF BEGINNING; THENCE CONTINUE ALONG THE LAST DESCRIBED COURSE 40.43 FEET; THENCE SOUTH 81°37'00Δ WEST 600.00 FEET; THENCE NORTH 55°45'58Δ WEST 900.00 FEET; THENCE SOUHT 84°49'28ΔWEST 656.86 FEET; THENCE NORTH 0°44'20Δ EAST 236.44; THENCE DUE EAST 613.80 FEET; THENCE DUE EAST 24.00 FEET; THENCE DUE NORTH 132.00 FEET; THENCE DUE EAST 198.00 FEET; THENCE DUE SOUTH 483.00 FEET; THENCE DUE WEST 148.51 FEET; THENCE DUE SOUTH 343.61 FEET; THENCE SOUTH 55°45'58Δ EAST 380.43 FEET; THENCE NORTH 81°37'00Δ EAST 590.29 FEET TO THE POINT OF BEGINNING. LESS AND EXCEPT THAT PORTION DEEDED TO THE STATE OF FLORIDA DEPARTMENT OF TRANSPORTATION AS DESCRIBED IN WARRENTY DEED RECORDED IN OFFICAL RECORDS BOOK 20278, PAGE 871, OF THE PUBLIC RECORDS OF BROWARD COUNTY, FLORIDA FOR RIGHT OF WAY.

SAID LANDS SITUATE, LYING, AND BEING IN BROWARD COUNTY, FLORIDA

PARCEL 4: (BURDINE'S REAL ESTATE, INC., A DELWARE CORPORATION)

COMMENCING AT THE INTERSECTION OF THE NORTH LINE OF THE SOUTH ONE-HALF (S 1/2) OF THE NORTHWEST ONE -QUARTER (NW 1/4) OF THE NORTHWEST ONE-QUARTER (NW 1/4) OF SECTION 30, TOWNSHIP 48 SOUTH, RANGE 43 EAST, AND THE WEST RIGHT-OF-WAY LINE OF U.S. HIGHWAY NO. 1 ACCORDING TO THE FLORDIA STATE ROAD DEPARTMENT RIGHT-OF-WAY MAP FOR ROAD (4) 5 (U.S. NO. 1), SHEET 3, STATE SECTION 8602, REVISED THORUGH 5/8/51; THENCE DUE SOUTH (ON AN ASSUMED BEARING) ALONG THE SAID WEST RIGHT-OF-WAY LINE 204.06 FEET; THENCE DUE WEST 145.00 FEET TO A POINT OF CURVATURE OF A CURVE TO THE RIGHT, SAID CURVE HAING A CENTRAL ANGLE OF 6°4'30Δ AND RADIUS OF 882.63 FEET; THENCE CONTINUE ALONG SAID CURVE TO THE RIGHT FOR AN ARC DISTANCE OF 104.62 FEE TO A POINT OF TANGENCY; THENCE NORTH 83°12'30Δ WEST ALONG A LINE TANGENT TO THE LAST DESCRIBED CURVE 170.40 FEET TO A POINT OF CURVATURE OF A CURVE TO THE LEFT, SAID CURVE HAVING A CENTRAL ANGLE OF 15°10'30Δ AND A RADIUS OF 710.71 FEET; THENCE CONTINUE ALONG SAID CURVE TO THE LEFT FOR AN ARC DISTANCE OF 188.23 FEET TO A POINT OF TANGENCY; THENCE SOUTH 81°37'00Δ WEST ALONG A LINE 90 FEET SOUTH AND PARALLEL TO THE NORTH LINE OF THE SOUHT ONE-HALF (S 1/2) OF THE NORTHWEST ONE-QUARTER (NE 1/4) OF THE NORTWEST ONE-QUARTER (NW 1/4) OF SAID SECTION 30 FOR A DISTANCE OF 316.04 FEET; THENCE SOUTH 81°43'06Δ WEST ALONG A LINE 90 FEET SOUTH OF AND PARALLEL TO THE NORTH LINE OF THE SOUTH ONE-HALF (S 1/2) OF THE NORTHEAST ONE-QUARTER (NE 1/4) OF THE NORTHEAST ONE-QUARTER (NE 1/4) OF SECTION 25, TOWNSHIP 48 SOUTH, RANGE 42 EAST, 711.83 FEET TO THE POINT OF BEGINNING; THENCE CONTINEU ON THE LAST DESCRIBED COURSE 359.34 FEET; THENCE SOUTH 0°44'20Δ WEST 767.44 FEET; THENCE DUE EAST 613.80 FEET; THENCE DUE NORTH 603.00 FEET; THENCE DUE WEST 248.31 FEET; THENCE DUE NORTH 216.13 FEET TO THE POINT OF BEGINNING; LESS AND EXCEPT PARCEL 809 AS MORE FULLY DESCRIBED IN STIPULATED ORDER OF TAKING AND FINAL JUDGMENT RECORD IN OFFICAL RECORDS BOOK 21519, PAGE 394, PUBLIC RECORDS OF BOWARD COUNTY, FLORIDA.

LESS AND EXCEPT THE FOLLOWING DESCRIBED PROPERTY

DEVELOPMENT PARCEL 1

A PORTION OF PARCEL "A", "POMPANO CITI CENTRE PLAT", ACCORDING TO THE PLAT THEREOF AS RECORDED IN PLAT BOOK 174, PAGES 45 THRU 52, INCLUSIVE, OF THE PUBLIC RECORDS OF BROWARD COUNTY, FLORIDA, BEING MORE PARTICULARLY DESCRIBED AS FOLLOWS:

COMMENCING AT THE MOST WESTERLY SOUTHWEST CORNER OF SAID PARCEL "A"; THENCE NORTH 07°35'43" EAST ALONG THE WESTERLY LINE OF SAID PARCEL "A" 236.44 FEET TO THE POINT OF BEGINNING; THENCE CONTINUE NORTH 07°35'43" EAST ON SAID WESTERLY LINE 532.13 FEET; THENCE SOUTH 83°08'37" EAST 470.80 FEET; THENCE SOUTH 38°08'37" EAST 96.01 FEET; THENCE SOUTH 06°51'23" WEST 354.55 FEET; THENCE SOUTH 38°08'37" EAST 44.46 FEET; THENCE SOUTH 83°08'37" EAST 36.81 FEET; THENCE SOUTH 06°51'23" WEST 78.21 FEET; THENCE NORTH 83°08'37" WEST 613.80 FEET TO THE POINT OF BEGINNING.

SAID LANDS LYING AND BEING IN THE CITY OF POMPANO BEACH, BROWARD COUNTY, FLORIDA. CONTAINING 291,986 SQUARE FEET (6.7031 ACRES) MORE OR LESS.

DEVELOPMENT PARCEL 2

A PORTION OF PARCEL "A", "POMPANO CITI CENTRE PLAT", ACCORDING TO THE PLAT THEREOF AS RECORDED IN PLAT BOOK 174, PAGES 45 THRU 52, INCLUSIVE, OF THE PUBLIC RECORDS OF BROWARD COUNTY, FLORIDA, BEING MORE PARTICULARLY DESCRIBED AS FOLLOWS:

BEGINNING AT THE MOST WESTERLY SOUTHWEST CORNER OF SAID PARCEL "A"; THENCE NORTH 07°35'43" EAST ALONG THE WESTERLY LINE OF SAID PARCEL "A" 236.44 FEET; THENCE SOUTH 83°08'37" EAST 613.80 FEET; THENCE NORTH 06°51'23" EAST 78.21 FEET; THENCE SOUTH 83°08'37" EAST 290.44 FEET; THENCE SOUTH 38°08'37" EAST 40.55 FEET; THENCE SOUTH 06°51'23" WEST 418.44 FEET TO A POINT ON THE SOUTHERLY LINE OF SAID PARCEL "A"; THENCE NORTH 48°54'35" WEST ALONG SAID SOUTHERLY LINE 340.83 FEET; THENCE NORTH 88°19'09" WEST ALONG SAID SOUTHERLY LINE 656.86 FEET TO THE POINT OF BEGINNING.

SAID LANDS LYING AND BEING IN THE CITY OF POMPANO BEACH, BROWARD COUNTY, FLORIDA, CONTAIN 236,404 SQUARE FEET (5.4271 ACRES) MORE OR LESS.

POMPANO CITI CENTRE SITE DATA

<u>AREA BREAKDOWNS:</u>

PAVED AREAS (VEHICLE USE)	=	900,679.7 S.F.	=	20.68 AC	= 43.4%
SIDEWALKS	=	86,790.9 S.F.	=	1.99 AC	= 4.2%
PLAZA	=	52,275.5 S.F.	=	1.2 AC	= 2.5%
GREEN SPACE	=	248,758.7 S.F.	=	5.7 AC	= 12%
BUILDING FOOTPRINTS	=	788,772 S.F.	=	18.1 AC	= 37.9%
TOTAL SITE AREA =	=	2,076,505.2 S.F.	=	47.67 AC	= 100%

<u>GROSS SITE ACREAGE BREAKDOWN:</u>

GROSS EXISTING SITE SQ. FT.(ACRES) OF SHOPPING CENTRE PRIOR TO PROPOSED RM-30	= ±2,605,452 S.F. (59.81 ACRES)
GROSS SITE SQ.FT.(ACRES) OF PROPOSED MULTI-FAMILY DEVELOPMENT =	±529,130 S.F. (12.15 ACRES)
GROSS EXISTING SITE SQ.FT.(ACRES) OF REMAINING SHOPPING CENTRE =	±2,076,322 S.F. (47.67 ACRES)

SITE DATA

PARCEL / RETAIL			BUILDING AREA
OUTPARCEL 1	WENDY'S		±3,392 SQ. FT.
OUTPARCEL 2	T.B.D.		±4,578 SQ. FT.
OUTPARCEL 3	ABC WINE & SPIRIT		±7,919 SQ. FT.
OUTPARCEL 4	J. MARKS RESTAURANT		±6,386 SQ. FT.
OUTPARCEL 5	CHILI'S		±5,850 SQ. FT.
	WAMU		±3,630 SQ. FT.
OUTPARCEL 6	VERIZON WIRELESS & PIER 1 IMPORTS		±14,205 SQ. FT.
BUILDING B	1ST FLOOR		±78,980 SQ. FT.
BUILDING C	1ST FLOOR		±18,070 SQ. FT.
	2ND FLOOR		±18,070 SQ. FT.
			±36,140 SQ. FT.
BUILDING D	1ST FLOOR		±14,810 SQ. FT.
	2ND FLOOR		±14,810 SQ. FT.
			±29,620 SQ. FT.
BUILDING E	1ST FLOOR		±25,676 SQ. FT.
	2ND FLOOR		±25,676 SQ. FT.
			±51,352 SQ. FT.
BUILDING G	1ST FLOOR		±22,188 SQ. FT.
	2ND FLOOR		±16,172 SQ. FT.
	3RD FLOOR		±15,757 SQ. FT.
			±54,117 SQ. FT.
LOWE'S HOME GROSS BUILDING AREA			
	BUILDING		±133,429 SQ. FT.
	GARDEN CENTER		±30,255 SQ. FT.
			±163,684 SQ. FT.
BUILDING K	1ST FLOOR		±82,339 SQ. FT.
	2ND FLOOR		±76,411 SQ. FT.
			±158,750 SQ. FT.
OUTPARCEL M			±19,091 SQ. FT.
J.C. PENNEY	1ST FLOOR		±74,842 SQ. FT.
	2ND FLOOR		±74,842 SQ. FT.
			±148,277 SQ. FT.
TOTAL GROSS BUILDING AREA			±788,772 SQ. FT.
	LESS:		
	LOWE'S GARDEN CENTER	30,255 SQ. FT.	
	J.C. PENNEY 2ND FLOOR	5,600 SQ. FT.	
TOTAL ENCLOSED BUILDING AREA			±752,917 SQ. FT.
5% OF REMAINING AREA FOR STOCK/STORAGE, OFFICE AREAS			±38,183 SQ. FT.
TOTAL ENCLOSED RETAIL SALES AREA			±714,734 SQ. FT.

PERVIOUS / IMPERVIOUS SITE DATA

PERVIOUS =	5.71 AC	=	±248,758.7 SQ. FT.
IMPERVIOUS =	41.96 AC	=	±1,827,563.3 SQ. FT. (INCLUDING TOTAL ENCLOSED BUILDING AREA)

LANDSCAPE CALCULATIONS (INTERIOR)

15% OF TOTAL V.U.A. (VEHICLE USE AREA) SHALL BE INTERIOR LANDSCAPING

900,679.7 SQ. FT. TOTAL V.U.A. X 0.15=	= 135,102	SQ. FT. REQUIRED
LANDSCAPE AREA=	= 248,758.7	SQ. FT.
PLAZA LANDSCAPE AND PAVERED AREA	= 52,275.5	SQ. FT.
TOTAL INTERIOR LANDSCAPE	= 301,034.2	SQ. FT. PROVIDED

PARKING REQUIREMENTS

DESIRED PARKING RATIO
3.4 SPACES/1000 S.F. OF GROSS ENCLOSED RETAIL SALES AREA

GROSS ENCLOSED RETAIL SALES AREA (INCLUDING 5% REDUCTION) FOR STOCKS/STORAGES/OFFICE AREAS, AND EXCLUDING THE GARDEN CENTER AND JC PENNEY 2ND FLOOR CORRIDOR) ±714,734 S.F.

<u>PARKING REQUIRED</u>
714,734 S.F./1000*3.4 = 2,502 SPACES REQUIRED

<u>PARKING PROVIDED ON GRADE</u>

REGULAR (9'X18')	2,411	
HANDICAP (12'X18')	63	
TOTAL PARKING	2,474 PROVIDED	(SEE SHARED PARKING STUDY)

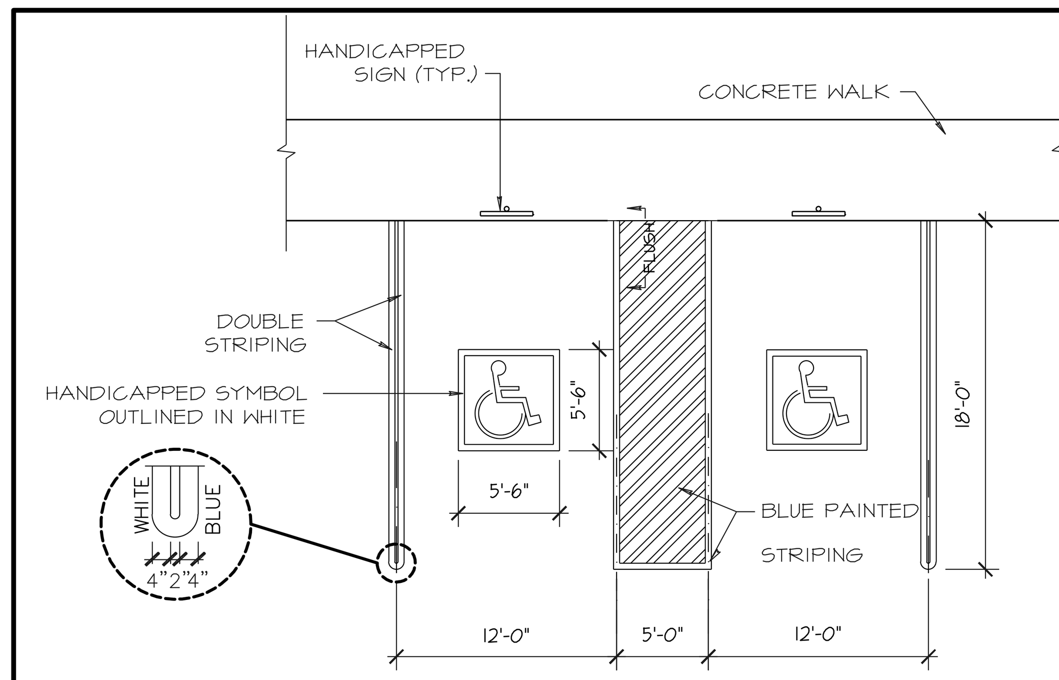

NOTE:
HANDICAP PARKING SPACES SHALL BE 12' WIDE X 18' LONG EACH SUCH PARKING SPACE SHALL BE PROMINENTLY OUTLINED WITH PAINT AND POSTED WITH A FIXED POLE SIGN (NOT LESS THAN 4' AND NOT MORE THAN 5' IN HGT.) CLEARLY MARKED "HANDICAPPED ONLY" OR "HANDICAPPED PARKING" OR THE INTERNATIONAL WHEELCHAIR SYMBOL AND CAPTION "PARKING BY DISABLED PERMIT ONLY - $250 FINE", PROVIDE 4" BLUE STRIPING AS INDICATED.

1/MP2 **TYP. HANDICAPPED PARKING SPACES**
NTS @ SIDEWALKS LOCATIONS ONLY

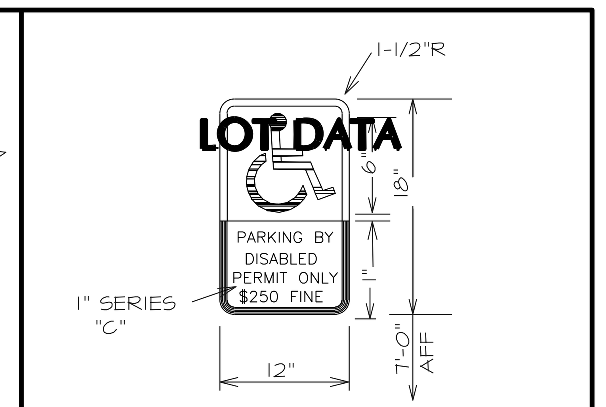

NOTE:
1. 1. ALL LETTERS ARE 1" SERIES AT 1" SPACING.
2. TOP PORTION OF FTP 25 & 26 SHALL HAVE A REFLECTIVE BLUE BACKGROUND WITH WHITE REFLECTIVE SYMBOL AND BORDER.
3. BOTTOM PORTION SHALL HAVE A REFLECTIVE WHITE BACKGROUND WITH BLACK OPAQUE LEGEND AND BORDER.
4. FTP 25 & 26 MAY BE FABRICATED ON ONE PANEL OR TWO.
5. FTP 25 IS FOR USE IN AREAS WHERE SPACE IS LIMITED.

2/MP2 **HC. SIGN DETAIL**
NTS

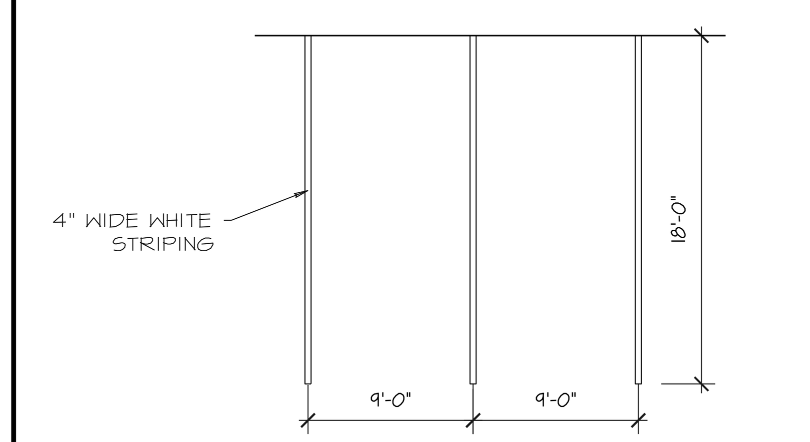

3/MP2 **TYPICAL 9'x18' PARKING SPACE**
NTS

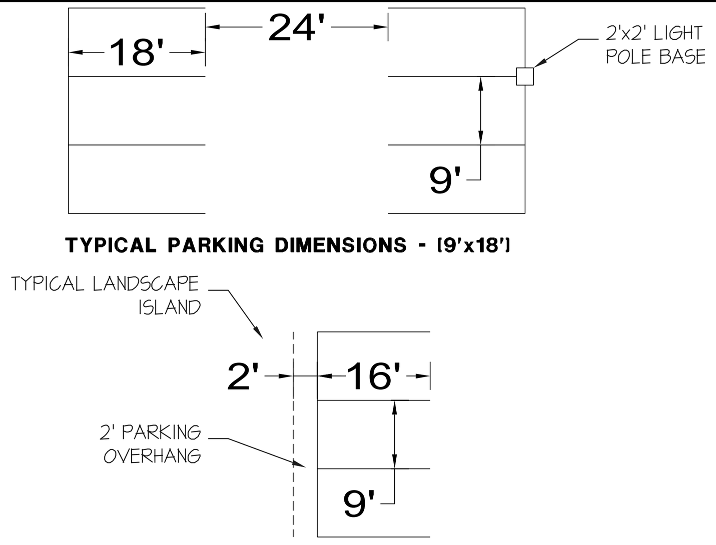

TYPICAL PARKING DIMENSIONS - [9'x16' AT CONT. LANDSCAPE ISLANDS]

4/MP2 **TYPICAL PARKING DETAILS**
NTS

MODIFICATIONS OF APPROVED MASTER SITE PLAN AT
POMPANO CITI CENTRE
POMPANO BEACH, FL

Digitally signed by Charles A Michelson
DN: CN=Charles A Michelson, dnQualifier=A01410D0000017B07B3EB0A0000E1F4, O=Florida, C=US
Date: 2023.05.24 22:53:26-04'00'

SALTZ MICHELSON ARCHITECTS
3501 Griffin Road
Ft. Lauderdale, FL 33312
(954) 266-2700 Fx: (954) 266-2701
sma@saltzmichelson.com
AA-0002897

STATE OF FLORIDA CHARLES MICHELSON AR9976 REGISTERED ARCHITECT
Charles Michelson AR0009976

Project No.: 2021-121
Drawn By: VM/SF
Checked By: MA
Date: 09/02/2022
REVISIONS

Drawing name: ...Projects\2021\Drawings\07 CDs\21-121 - MP2_PROPOSED NEW MASTER SITE PLAN_2023_01_25.dwg Layout Name: MP2 Plotted by: sfortin Plotted on: May 23, 2023 - 10:51pm

MP2

P&Z
PZ21-13000008
06/28/2023