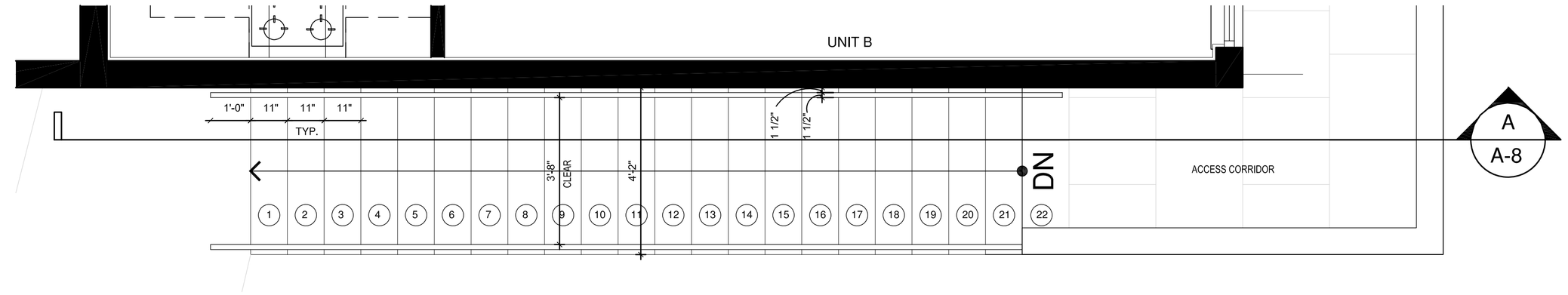

STAIR PLAN SECOND FLOOR

SCALE: 1/2" = 1'-0"

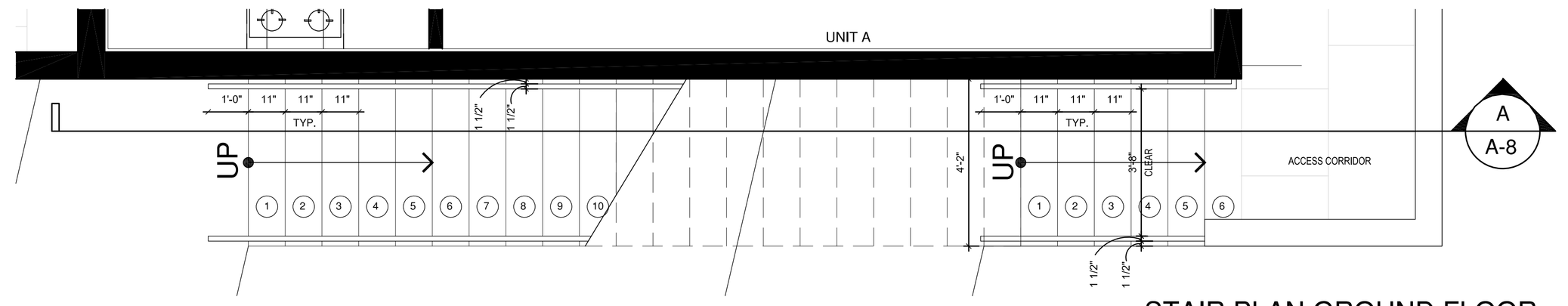

STAIR PLAN GROUND FLOOR

SCALE: 1/2" = 1'-0"

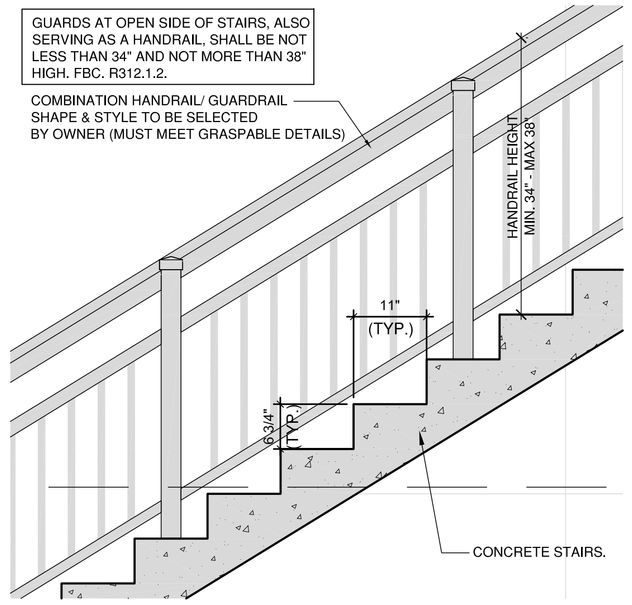

NOTE:
PROVIDE SHOP DRAWINGS
RAILING UNDER SEPARATE PERMIT

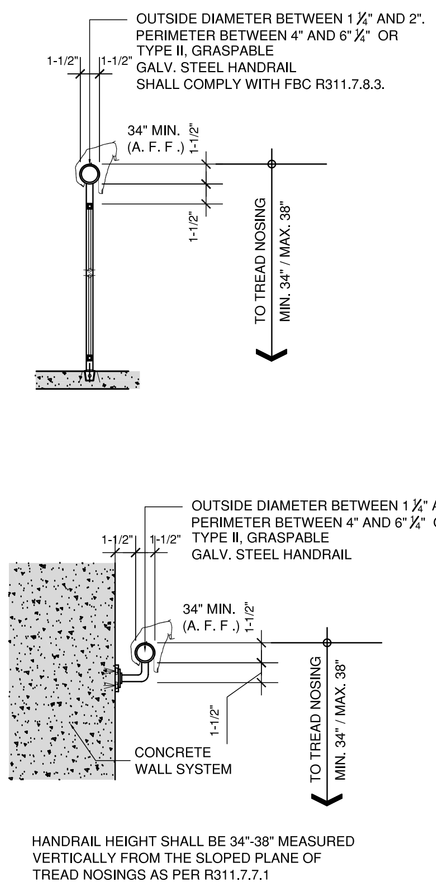

HANDRAIL HEIGHT SHALL BE 34"-38" MEASURED VERTICALLY FROM THE SLOPED PLANE OF TREAD NOSINGS AS PER R311.7.7.1

RAILING DETAILS

SCALE: N.T.S.

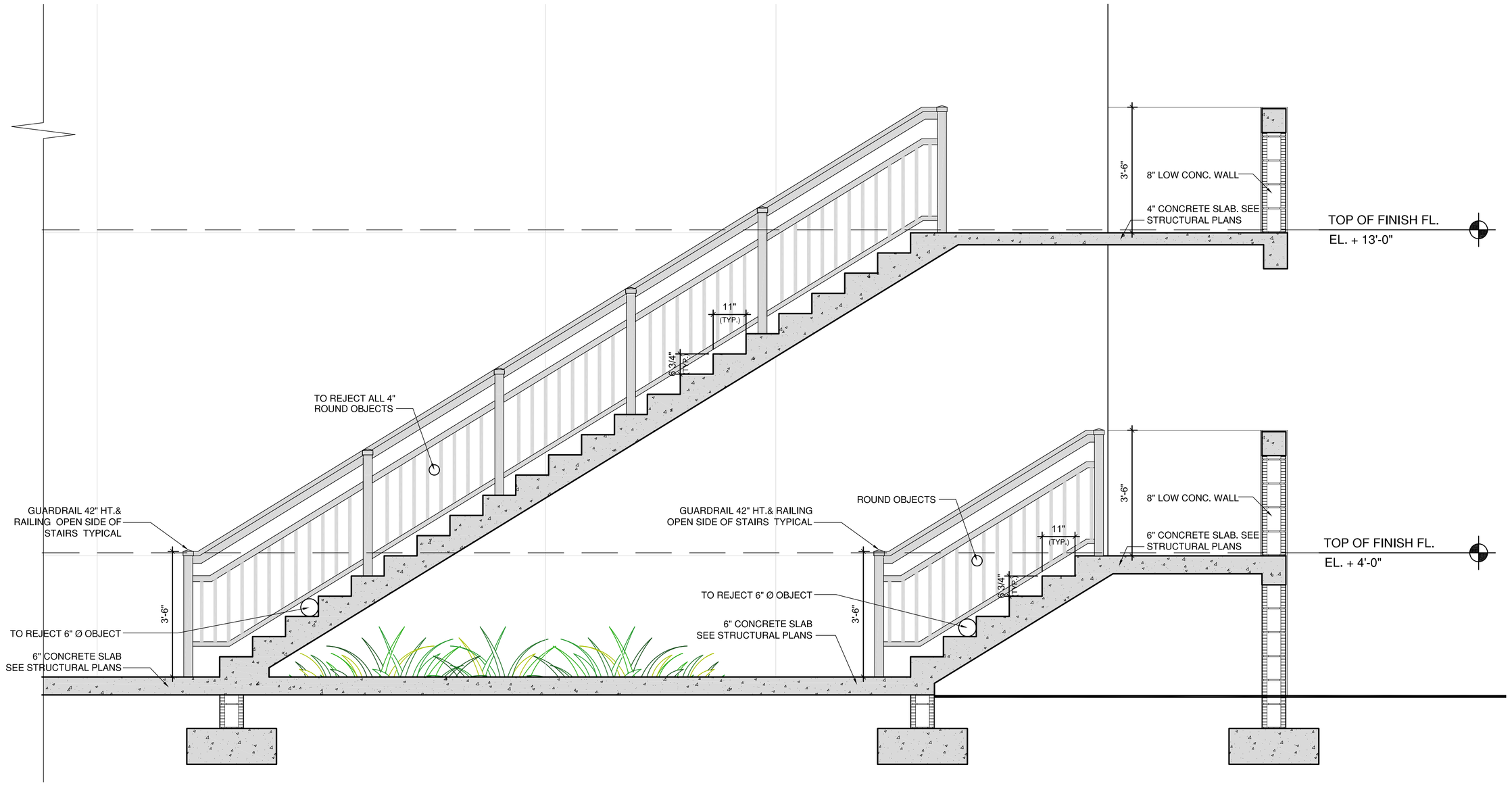

(A) STAIR SECTION

SCALE: 1/2" = 1'-0"

BELLÓN architecture

12550 S.W. 1ST STREET
SUITE 203
MIAMI, FLORIDA 33186
F. (305) 278-7473
WWW.BELLONWILANES.COM
ARCHITECTURE
LAND PLANNING
INTERIORS
CONSULTANTS

PZ21-12000005
7/7/2021

RENTAL APARTMENTS
FOR KAVAC MULTIFAMILY LLC
820 NW 9th AVENUE
POMPANO BEACH , FLORIDA

MARK	DATE	DESCRIPTION

PROJECT No. LB530
DRAWN BY: FM
CHECKED BY: LB
DATE: 5-30-19

LEOPOLDO BELLON
Digitally signed by LEOPOLDO BELLON
Date: 2021.05.25 11:29:57 -04'00'
LEOPOLDO BELLON, AIA (AR-8737)

SHEET TITLE
BUILDING STAIR SECTION
005-A8
SHEET OF