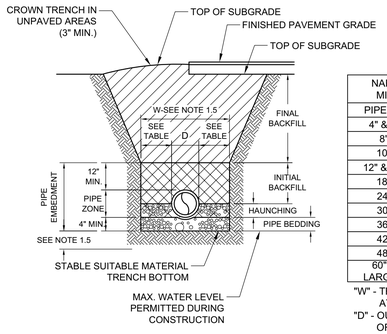

NARROW TRENCH MINIMUM WIDTH	
PIPE "D"	WIDTH "D"
4" & 6"	18"
8"	24"
10"	26"
12" & 15"	30"
18"	32"
24"	36"
30"	42"
36"	48"
42"	54"
48"	60"
60" & LARGER	1.3 TIMES PIPE O.D.

"W" - TRENCH WIDTH AT TOP OF PIPE
"D" - OUTSIDE DIAMETER OF PIPE

1. NOTES - PRESSURE FLOW AND STORM SEWER PIPE.

1.1. GENERAL: TRENCH CONSTRUCTION SHALL BE IN CONFORMANCE WITH FDOT STANDARD SPECIFICATIONS SECTION 125. PVC PIPE INSTALLATION SHALL BE IN ACCORDANCE WITH THE UNI-BELL PVC PIPE ASSOCIATION, HANDBOOK OF PVC PIPE, DESIGN AND CONSTRUCTION. CONCRETE PIPE INSTALLATION SHALL BE IN ACCORDANCE WITH ANSI / ASCE 15-93.

1.2. PIPE BEDDING: PROVIDE BELL HOLES AT EACH JOINT, FOR PIPES LARGER THAN 4" IN DIAMETER, TO PERMIT PROPER ASSEMBLY AND PIPE SUPPORT.

1.3. HAUNCHING: USE MATERIAL MEETING THE CLASSIFICATION OF A-3 IN ACCORDANCE WITH ASTM D3282 (AASHTO M-145). MAXIMUM PARTICAL SIZE SHALL BE LESS THAN 1.5 INCHES.

1.4. INITIAL BACKFILL: USE SAME MATERIAL AS SPECIFIED FOR FINAL BACKFILL (SEE NOTE 1.9).

1.5. UNSUITABLE SOIL EXCAVATION: SE SHEET PD-2 FOR ADDITIONAL REQUIREMENTS. MINIMUM DIMENSIONS SHALL BE THE LARGER OF THE REQUIREMENTS SHOWN ON THIS SHEET AND SHEET PD-2.

2. GENERAL NOTES:

2.1. TRENCH WALLS - EXCAVATE TRENCH TO ENSURE SIDES WILL BE STABLE UNDER WORKING CONDITIONS. TRENCH WALLS TO BE SLOPED OR SUPPORTED IN ACCORDANCE WITH THE CHAPTER 90-96 OF THE LAWS OF FLORIDA (THE TRENCH SAFETY ACT) AND FEDERAL OSHA STANDARD CFR SECTION 1926.650 SUBPART - P.

2.2. DEWATERING: WHEN RUNNING OR STANDING WATER OCCURS IN THE TRENCH BOTTOM, OR THE TRENCH BOTTOM DISPLAYS A "QUICK" CONDITION, WATER SHALL BE REMOVED TO BELOW THE PIPE INVERT BY A SUITABLE MEANS, UNTIL THE PIPE IS BACKFILLED TO A SUFFICIENT HEIGHT TO PREVENT PIPE FLOATATION.

2.3. MINIMUM TRENCH WIDTH: PROVIDE A TRENCH WIDTH SUFFICIENT, BUT NO WIDER THAN NECESSARY, TO ENSURE WORKING ROOM TO PROPERLY AND SAFELY PLACE AND COMPACT HAUNCHING BACKFILL MATERIAL. SEE TABLE FOR MINIMUM TRENCH WIDTHS. WHERE SOIL CONDITIONS REQUIRE TRENCH WALLS TO BE SUPPORTED, MINIMUM WIDTH SHALL BE BETWEEN INNER FACE OF TRENCH SUPPORTS.

2.4. MOVABLE SHEETING, TRENCH BOXES OR SHIELDS: WHEN MOVABLE TRENCH SUPPORT IS USED, THE MINIMUM DISTANCE BETWEEN INNER FACE OF TRENCH SUPPORT, AND THE OUTER PIPE WALL, SHALL BE AT LEAST ONE PIPE DIAMETER OR 2 FEET WHICH EVER IS GREATER.

2.5. PREPARATION OF TRENCH BOTTOM: TRENCH BOTTOM SHALL BE PREPARED TO PROVIDE A FIRM STABLE UNIFORM FOUNDATION THE FULL LENGTH OF THE PIPE. IF UNSUITABLE MATERIAL IS ENCOUNTERED AT BOTTOM OF TRENCH, CONTINUE TO EXCAVATE TILL SUITABLE MATERIAL IS ENCOUNTERED. IF DEPTH TO SUITABLE MATERIAL IS GREATER THAN 2 FEET BELOW BOTTOM OF TRENCH, NOTIFY ENGINEER OF SUCH CONDITION BEFORE CONTINUING FURTHER TRENCH EXCAVATION.

2.6. PIPE BEDDING: BEDDING MATERIAL SHALL CONFORM TO ASTM D-2321, AND MEET THE REQUIREMENTS OF FDOT SPECIFICATION SECTION 125-8 BACKFILLING. FOR PVC AND OTHER "FLEXIBLE" PIPES, EXCAVATE 4" BELOW PROPOSED OUTSIDE BOTTOM OF PIPE, BACKFILL AND COMPACT WITH SPECIFIED BEDDING MATERIAL TO PROPER GRADE.

2.7. HAUNCHING: MATERIAL SHALL MEET AND BE INSTALLED AND COMPACTED INACCORDANCE WITH THE REQUIREMENTS OF FDOT SPECIFICATION SECTION 125-8 BACKFILLING. PLACE AND CONSOLDATE MATERIAL UNDER THE PIPE HAUNCH, UP TO THE PIPE SPRINGLINE, FOR THE FULL WIDTH OF THE TRENCH, BEFORE PLACING AND COMPACTING THE REMAINDER OF THE EMBEDMENT IN THE PIPE ZONE. HAUCHING MATERIAL SHALL BE PLACED AND CONSOLIDATED BY HAND SHOVEL SLICING ALONG HAUNCH OF PIPE AND BY WATERING (JETTING OR PUDDLING) OR HAND TAMPING. MECHANICAL COMPACTION IS NOT TO BE USED WITHIN 1 PIPE DIAMETER OR 2 FEET, WHICH EVER IS GREATER, EITHER SIDE OF THE OUTSIDE WALL OF THE PIPE.

2.8. INITIAL BACKFILL: SHALL EXTEND FROM THE SPRINGLINE OF THE PIPE TO 1 FOOT ABOVE THE TOP OF PIPE. MATERIAL SHALL BE PLACED AND CONSOLIDATED AS SPECIFIED FOR THE HAUNCHING MATERIAL.

2.9. FINAL BACKFILL: MATERIAL SHALL MEET AND BE INSTALLED AND COMPACTED INACCORDANCE WITH THE REQUIREMENTS OF FDOT SPECIFICATION SECTION 125-8 BACKFILLING. SELECT BACKFILL MEETING THE CLASSIFICATION OF A-1, A-3, OR A-2-4 IN ACCORDANCE WITH ASTM D3282 (AASHTO M-145). THE MATERIAL MUST NOT CONTAIN MUCK, STUMPS, ROOTS, BRUSH, VEGITABLE MATTER, RUBBISH, CONSTRUCTION DEBRI OR OTHER MATERIAL THAT WILL NOT COMPACT INTO A SUITABLE EMBANKMENT. MATERIAL MUST HAVE MAXIMUM PARTICLE SIZE AS FOLLOWS: WITHIN 12" OF TOP OF SUBGRADE - 31/2"; 12" TO 24" BELOW TOP OF SUBGRADE - 6"; GREATER THAN 24" BELOW TOP OF SUBGRADE - 12" OR COMPACTED THICKNESS OF LAYER BEING PLACED, WHICH EVER IS LESS. FINAL BACKFILL MAY BE NATIVE MATERIAL MEETING THE SPECIFIED REQUIREMENTS. UNLESS OTHERWISE NOTED.

2.10. COMPACTION TEST: COMPACTION PERCENTAGES SHOWN FOR TRENCH SECTION BACKFILL MATERIAL REFER TO ASTM - D698 (AASHTO - T-99, STANDARD PROCTOR). COMPACTION PERCENTAGES FOR LIMEROCK BASE COURSE MATERIAL REFER TO ASTM - D1557 (AASHTO -T-180, MODIFIED PROCTOR).

11 TRENCH SECTION FOR BURIED PIPES AND CULVERTS

NOT TO SCALE

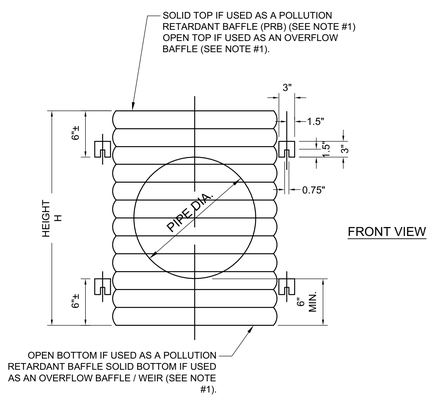

FRONT VIEW

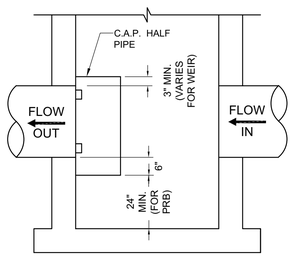

SIDE VIEW

STANDARD DIMENSIONS			
PIPE DIA.	D (INCHES)	T (GAUGE)	H (INCHES)
15"	27"	16	24"
18"	30"	16	27"
24"	36"	16	33"
30"	42"	14	39"
36"	48"	14	45"
42"	54"	14	51"
48"	60"	14	57"

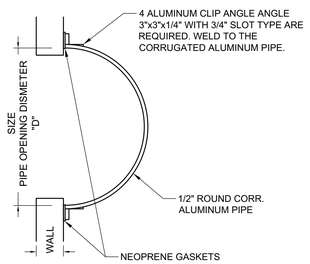

TOP VIEW

NOTES:
1. ALUMINUM SHEET OF SAME THICKNESS (GAUGE) AS PIPE SHALL BE WELDED TO CLOSE OPENING.
2. BAFFLE SHALL BE AS MANUFACTURED BY SOUTHERN CULVERT OR ENGINEER'S APPROVED EQUAL.
3. NEOPRENE GASKET (3/8" X 2") SHALL BE INSTALLED AT ALL BAFFLES.
4. FOR WEIR BAFFLE "H" DIMENSION VARIES. SEE PLANS FOR WEIR ELEVATION.
5. ALL CATCH BASIN OUTLETS LEADING TO AN EXFILTRATION TRENCH, WATER BODY OR DRY RETENTION AREA SHALL HAVE POLLUTION RETARDANT BAFFLE.

12 POLLUTION RETARDENT BAFFLE / WEIR DETAIL

NOT TO SCALE

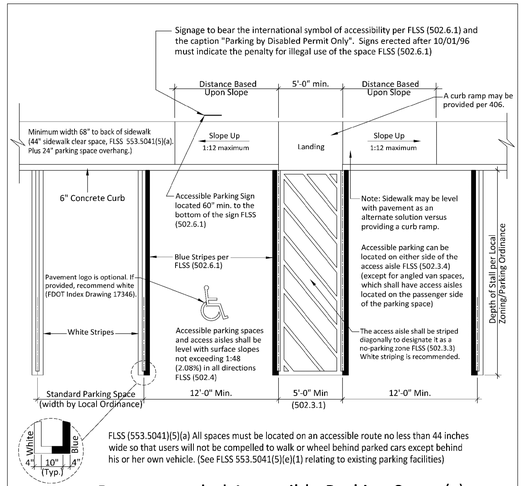

Recommended Accessible Parking Space(s) Design for Double Line Requirements

N.T.S.

THIS TECHNICAL ASSISTANCE DOCUMENT IS INTENDED TO PROVIDE INFORMAL GUIDANCE AND DOES NOT CONSTITUTE A LEGAL INTERPRETATION OF STATUTORY OR REGULATORY CRITERIA.

ENGINEERING STANDARDS 2022

REVISIONS	
BY	DATE

ENGINEERING DIVISION
CITY OF POMPANO BEACH

SCALE: N.T.S.

ACCESSIBLE PARKING SPACES

DATE: MAY 2022
DWG. NO. 300-4

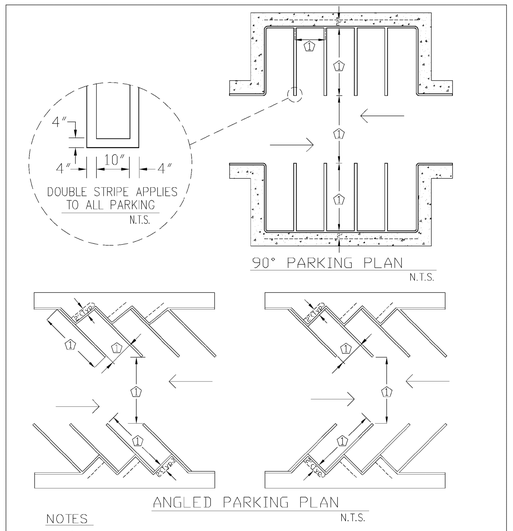

NOTES

1. INDICATED DIMENSION BY LOCAL ZONING ORDINANCE.
2. CURBING APPLIES TO ALL PARKING.
3. EACH SPACE SHALL BE DESIGNATED BY FOUR 4 INCH WIDE VISIBLE STRIPING CONSISTING OF WHITE PAINT OR AS APPROVED BY THE CITY.

ENGINEERING STANDARDS 2022

REVISIONS	
BY	DATE

ENGINEERING DIVISION
CITY OF POMPANO BEACH

SCALE: N.T.S.

STANDARD PARKING SPACES

DATE: MAY 2022
DWG. NO. 300-3

KEITH
301 East Atlantic Blvd.
Pompano Beach, FL 33060
PH: (954) 788-3400
Florida Engineering Business License: CA7928
Florida Surveyor and Mapper Business License: LB6860
Florida Landscape Architecture Business License: LC26000457

REVISIONS

NO.	DESCRIPTION	DATE

PRELIMINARY PLAN NOT FOR CONSTRUCTION

THESE PLANS ARE NOT FULLY PERMITTED AND ARE SUBJECT TO REVISIONS MADE DURING THE PERMITTING PROCESS.

RESPONSIBILITY FOR THE USE OF THESE PLANS PRIOR TO OBTAINING PERMITS FROM ALL AGENCIES HAVING JURISDICTION OVER THE PROJECT WILL FALL SOLELY UPON THE USER.

ISSUE DATE:	09/15/22
DESIGNED BY:	JW
DRAWN BY:	NW/SS/FA
CHECKED BY:	TD
BID-CONTRACT:	

This item has been digitally signed and sealed by Thomas F. Donahue, P.E. on the date below using a Digital Signature.

Printed copies of this document are not considered signed and sealed and the signature must be verified on any electronic copies.

2022.11.17 10:58:44-05'00'

THOMAS F. DONAHUE, P.E.
FLORIDA REG. NO. 60529
(FOR THE FIRM)

CLIENT

FIRST INDUSTRIAL REALITY TRUST

PROJECT

2551 NW 19TH ST POMPANO BEACH, FL 33069

SHEET TITLE

PAVING, GRADING AND DRAINAGE DETAILS

SHEET NUMBER: CP-503

PROJECT NUMBER: 1290-134

STATUS: PRELIMINARY

DRC
PZ22-12000042
12/21/2022