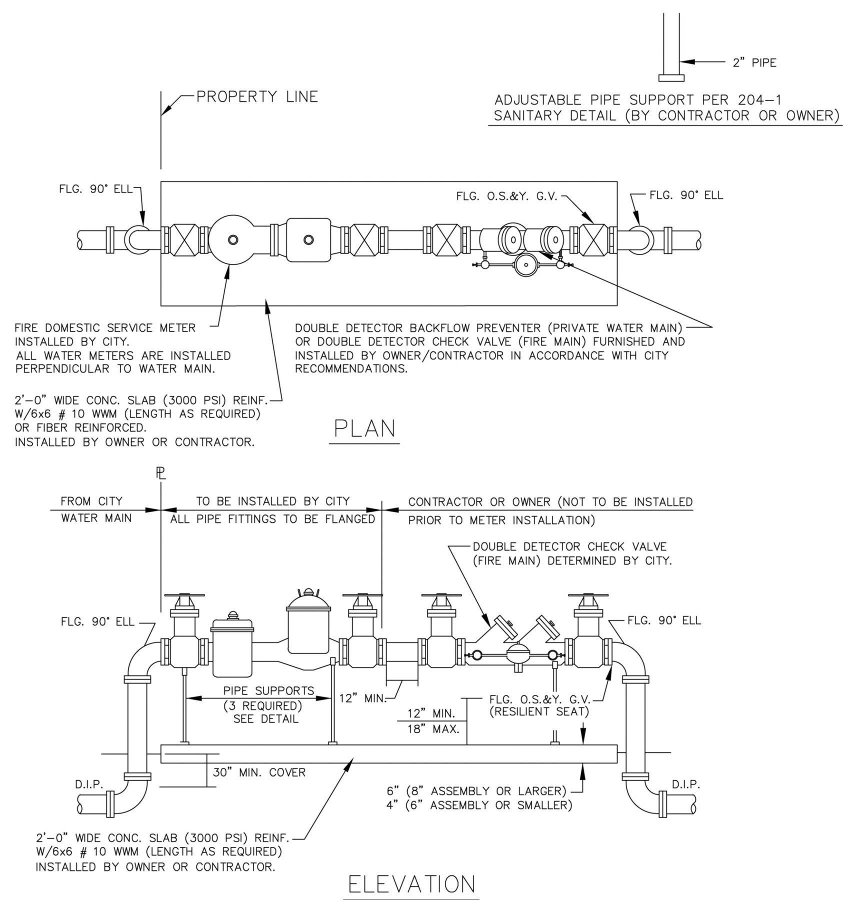

FIRE ONLY METER AND BACKFLOW DEVICE DETAILS

NOTES

1. THE BACKFLOW PREVENTOR FOR THE BY-PASS SHALL BE DDCV OR RPZ.
2. PLEASE NOTE THAT WATER METERS 3" AND LARGER ARE SUBJECT TO AN APPROXIMATE ORDER LEAD TIME OF 60 TO 75 DAYS AFTER FULL PAYMENT. PLEASE CONTACT CUSTOMER SERVICE AT 954-786-4637 TO ARRANGE FOR METER PROCUREMENT AND INSTALLATION.
3. USE MEGALUGS AT ALL PIPE JOINTS
4. PLEASE SEE METER INSTALL DIMENSION LIST ON STANDARD NO. 106-4

ENGINEERING STANDARDS 2022

REVISIONS			
BY	DATE	ENGINEERING DIVISION CITY OF POMPANO BEACH	FIRE ONLY METER AND BACKFLOW DEVICE
S.S.	05-2011		DATE: MAY 2022
S.S.	11-2012		DWG. NO. 106-3
S.S.	12-2013	SCALE: N.T.S.	
S.S.	11-2016		

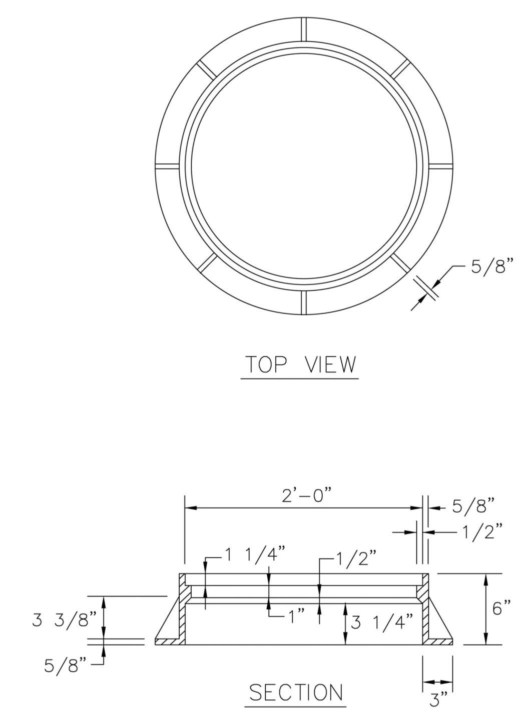

CAST IRON FRAME FOR MANHOLES

ENGINEERING STANDARDS 2022

REVISIONS			
BY	DATE	ENGINEERING DIVISION CITY OF POMPANO BEACH	CAST IRON FRAME FOR MANHOLES
		SCALE: N.T.S.	DATE: JUNE 2022 DWG. NO. 411-1

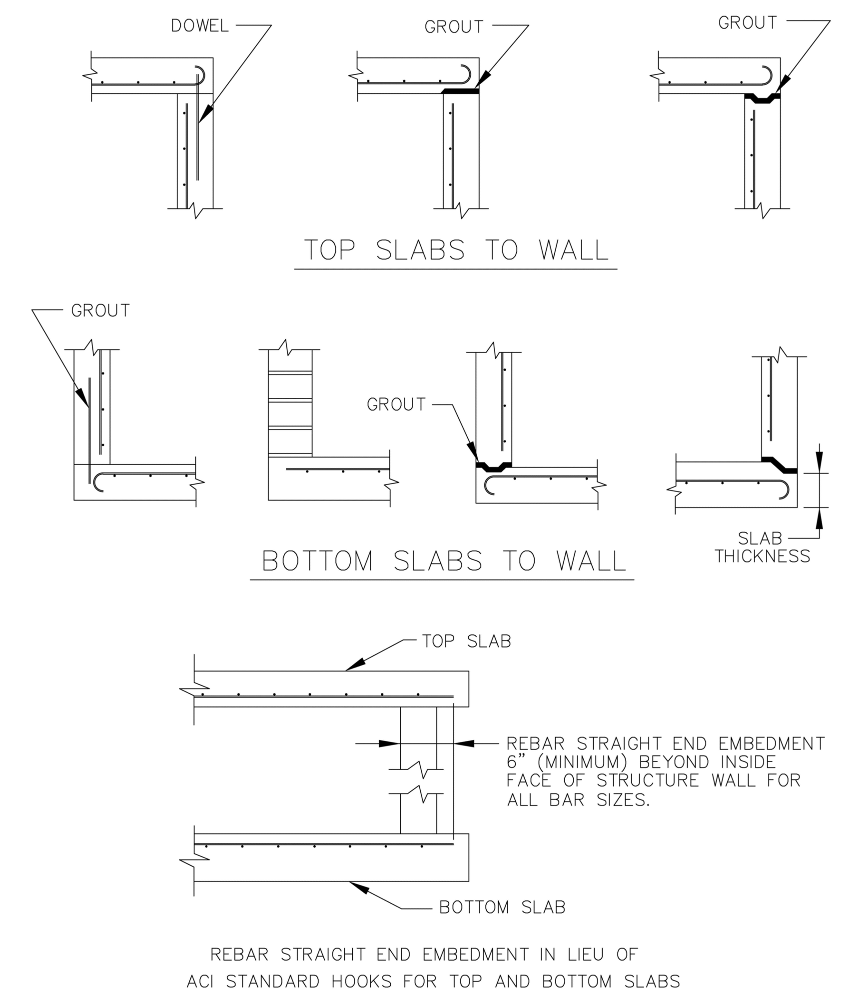

REBAR STRAIGHT END EMBEDMENT IN LIEU OF ACI STANDARD HOOKS FOR TOP AND BOTTOM SLABS

OPTIONAL CONSTRUCTION JOINTS

ENGINEERING STANDARDS 2022

REVISIONS			
BY	DATE	ENGINEERING DIVISION CITY OF POMPANO BEACH	OPTIONAL CONSTRUCTIONAL JOINTS
		SCALE: N.T.S.	DATE: JUNE 2022 DWG. NO. 412-1

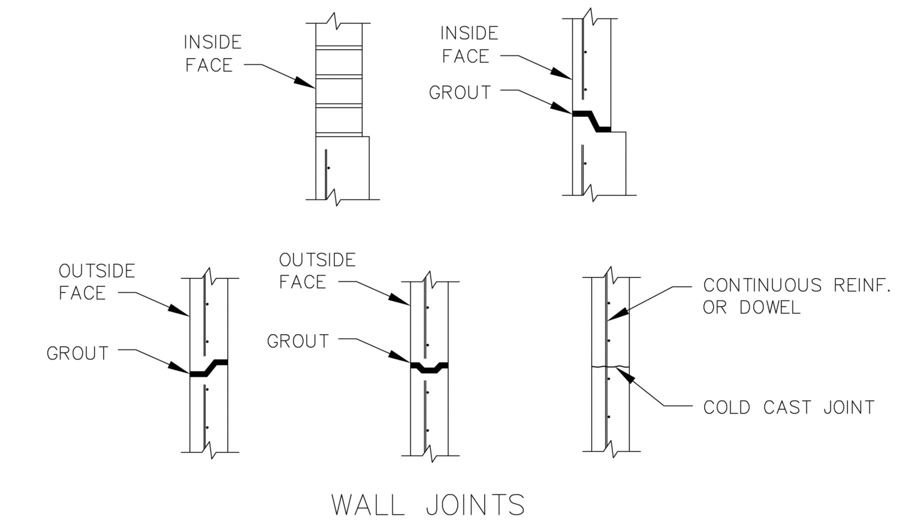

NOTES:

1. ONE OR MORE TYPES OF JOINTS MAY BE USED IN A SINGLE STRUCTURE, EXCEPT BRICK WALL STRUCTURE. BRICK WALL CONSTRUCTION IS PERMITTED ON CIRCULAR UNITS ONLY.
2. ALL GROUTED JOINTS ARE TO HAVE A MAXIMUM THICKNESS OF 1".
3. KEYWAYS ARE TO BE A MINIMUM OF 1 1/2" DEEP.
4. JOINT DOWELS ARE TO BE #4 BARS, 12" LONG WITH A MINIMUM OF 6 BARS PER CIRCULAR STRUCTURES APPROXIMATELY EVENLY SPACED, AND 2 BARS PER SIDE AT APPROXIMATE QUARTER POINTS FOR RECTANGULAR STRUCTURES.
5. MINIMUM COVER ON REINFORCING BARS IS 1 1/4".
6. REBAR STRAIGHT END EMBANKMENT MAY BE USED IN LIEU OF ACI STANDARD HOOKS FOR TOP AND BOTTOM SLABS EXCEPT WHEN HOOKS ARE SPECIFICALLY CALLED FOR IN PLANS OR STANDARD DRAWINGS.
7. JOINTS BETWEEN WALL SEGMENTS AND BETWEEN WALL SEGMENTS AND TOP OR BOTTOM SLABS MAY BE SEALED EITHER BY PREFORMED PLASTIC GASKET MATERIAL OR BY GROUT.
8. APPROVED PRODUCT INSERTS MAY BE USED IN LIEU OF DOWEL EMBEDMENT.

OPTIONAL CONSTRUCTION JOINTS

ENGINEERING STANDARDS 2022

REVISIONS			
BY	DATE	ENGINEERING DIVISION CITY OF POMPANO BEACH	OPTIONAL CONSTRUCTION JOINT
		SCALE: N.T.S.	DATE: JUNE 2022 DWG. NO. 412-2

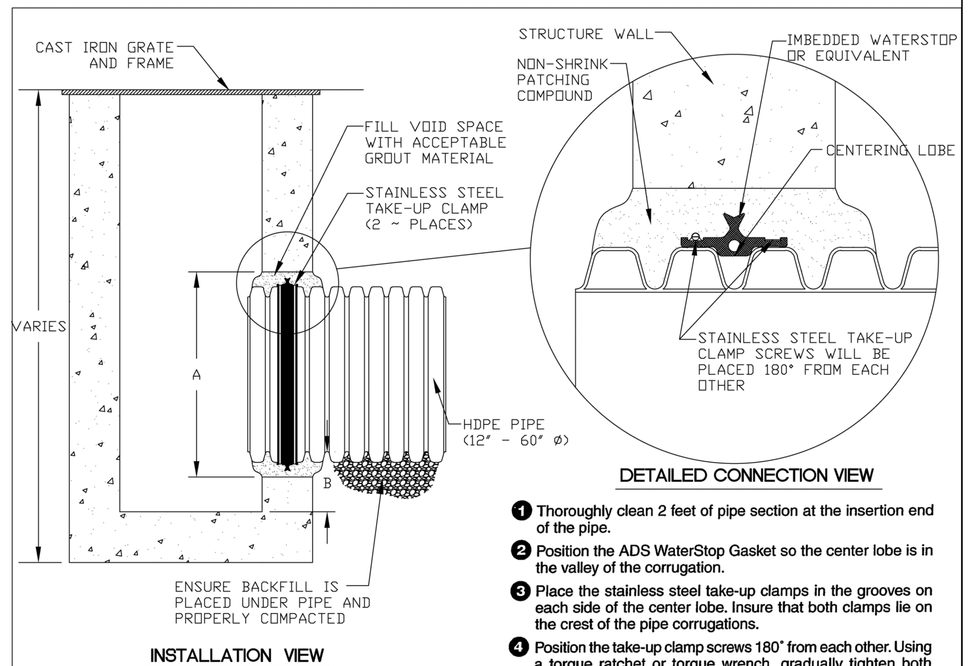

1. Thoroughly clean 2 feet of pipe section at the insertion end of the pipe.
2. Position the ADS WaterStop Gasket so the center lobe is in the valley of the corrugation.
3. Place the stainless steel take-up clamps in the grooves on each side of the center lobe. Insure that both clamps lie on the crest of the pipe corrugations.
4. Position the take-up clamp screws 180° from each other. Using a torque ratchet or torque wrench, gradually tighten both screws of each clamp to 60 lbs./inch torque. Do not overtighten. A screw driver will not tighten clamps adequately.
5. Apply a good quality concrete bonding agent to the structure opening.
6. Insert pipe into the structure opening. Make sure that the ADS WaterStop is fully within the plane of the structure's wall. **If mortaring in place,** apply and compact non-shrink grout around the ADS WaterStop and between the pipe and the opening, taking care to fill the voids. Make sure that the ADS WaterStop Gasket does not contact the bare structure walls. **If pouring in place,** use concrete of sufficient slump to permit complete flow around the pipe and ADS WaterStop. Thoroughly vibrate all around the pipe and ADS WaterStop Gasket to complete compaction and to release any trapped air.
7. Allow concrete or mortar to fully cure before testing or backfilling. If the system is to be tested, testing should be completed prior to backfilling around the structure, following all recommendations and requirements of the test system manufacturer. Plug any vent holes in the N-12 pipe prior to testing.
8. Backfill the N-12 pipe following recommendations in ADS Product Note 3.115, *Installing N-12 Storm, Sanitary Sewer and Culvert Pipe.*

INSTALLATION RECOMMENDATIONS

PIPE SIZE (IN)	PIPE OD (IN) A-PROFILE	PIPE OD (IN) H-PROFILE	"A" MIN. HOLE Ø (IN)	"B" MIN. DISTANCE PIPE INVERT TO STRUCUTRE INVERT (IN)
12	14.5	14.2	19.50	3.7
15	17.6	17.8	23.00	4.0
18	21.2	21.5	26.50	4.2
24	27.8	28.4	33.25	4.5
30	35.1	35.5	40.50	5.2
36	41.1	41.4	47.00	5.5
42	47.7	48.0	53.00	5.7
48	53.6	54.0	59.00	5.7
60	66.3	67.3	72.00	6.4

WATER STOP SEAL

ENGINEERING STANDARDS 2022

REVISIONS			
BY	DATE	ENGINEERING DIVISION CITY OF POMPANO BEACH	WATER STOP SEAL
TCW	04-08		DATE: MAY 2022 DWG. NO. 414-1
		SCALE: N.T.S.	

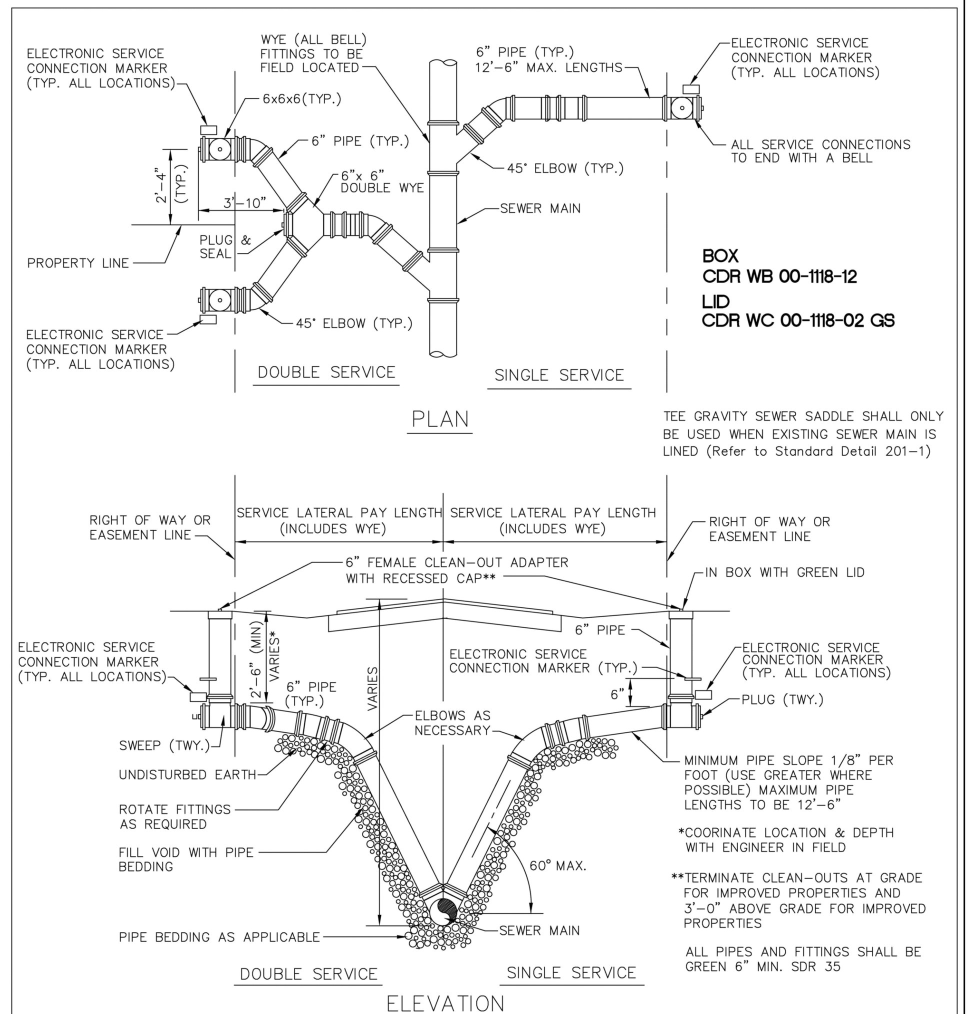

SERVICE LATERALS WITH RISERS

ENGINEERING STANDARDS 2022

REVISIONS			
BY	DATE	ENGINEERING DIVISION CITY OF POMPANO BEACH	SERVICE LATERALS
T.W.	11-2007		DATE: JUNE 2022 DWG. NO. 200-1
S.S.	01/27/12		
S.S.	07/10/12	SCALE: N.T.S.	
S.S.	02/05/16		

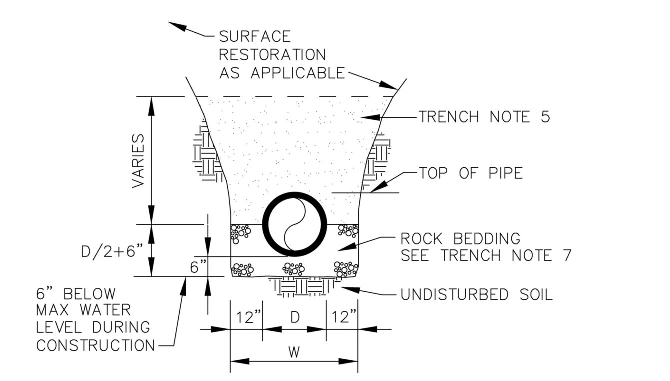

TRENCH BACKFILL / BEDDING CLASS " B "

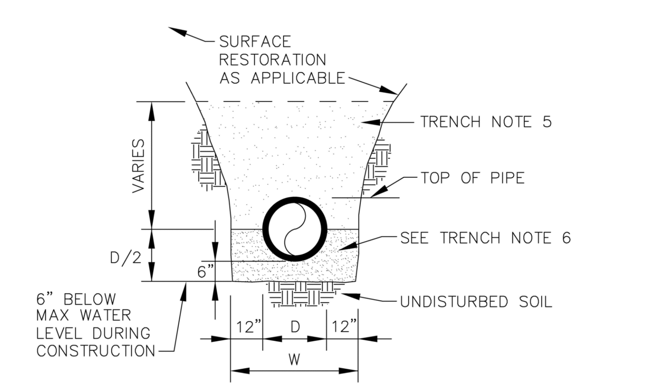

TRENCH BACKFILL / BEDDING CLASS " A "

ENGINEERING STANDARDS 2022

REVISIONS			
BY	DATE	ENGINEERING DIVISION CITY OF POMPANO BEACH	TRENCH BACKFILL / BEDDING
S.S.	JUNE 2005		DATE: JUNE 2022 DWG. NO. 203-1
		SCALE: N.T.S.	

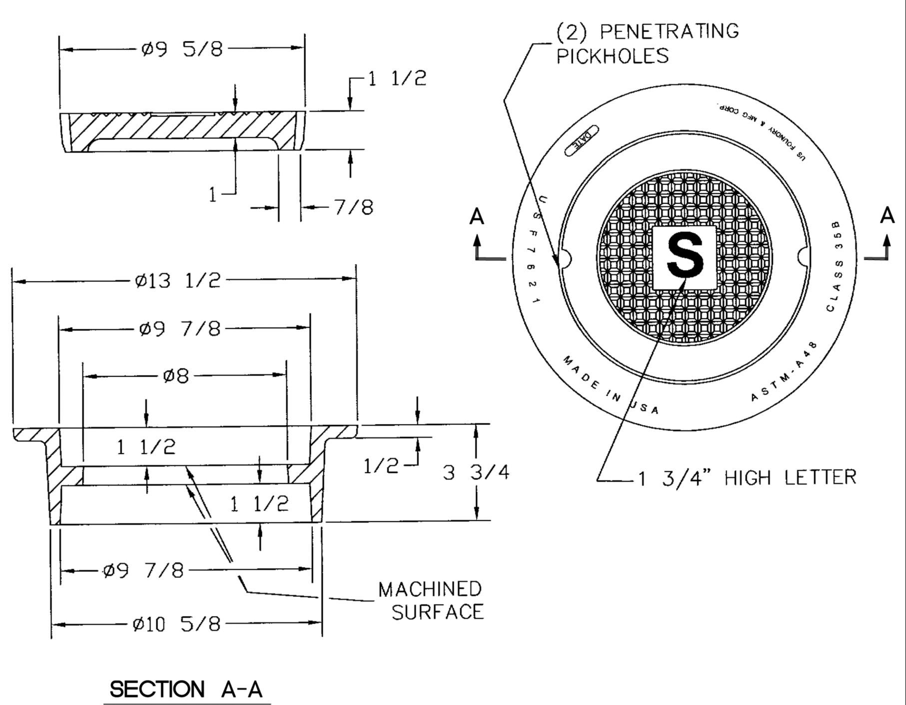

NOTE

MATERIAL: Gray Cast Iron
ASTM-A48 Class 35B

SEWER BOX AND COVER - HEAVY TRAFFIC

ENGINEERING STANDARDS 2022

REVISIONS			
BY	DATE	ENGINEERING DIVISION CITY OF POMPANO BEACH	SEWER BOX AND COVER HEAVY TRAFFIC
S.S.	12/06/18		DATE: JUNE 2022 DWG. NO. 210-3
		SCALE: N.T.S.	

Sunshine 811

Call 811 or visit sunshine811.com two full business days before digging to have buried facilities located and marked.

Check positive response codes before you dig!

THE BETA JONES GROUP

A CIVIL ENGINEERING FIRM

EXPEDITING DEVELOPMENT

801 Brickell Avenue
Suite 800
Miami, Florida 33131

PH: 786.284.8828
FAX: 866.312.8730

FLORIDA CERTIFICATE OF AUTHORIZATION # 27431

PROJECT NUMBER: 23106

DRAWN BY: AH | DESIGN BY: AH | CHECK BY: LAB

ORIGINAL DRAWING DATE: 01/04/2023

REVISIONS:

PROJECT NAME:

TOWNHOMES CANAL DRIVE POMPANO

LOCATION:

3233 - 3237 CANAL DRIVE
POMPANO BEACH, FL 33062

FOR:

MR. SERGE MICHAUD

3018 NE 20TH COURT
FT. LAUDERDALE, FL 33305

PLAN STATUS:

SUBMITTAL SET:
FOR AGENCY REVIEW AND APPROVAL

LUIS ALBERTO BETALLELUZ, JR. LICENSE No. 65892 STATE OF FLORIDA PROFESSIONAL ENGINEER

THIS ITEM HAS BEEN DIGITALLY SIGNED AND SEALED BY: LUIS A. BETALLELUZ, P.E. ON THE DATE ADJACENT TO THE SEAL.

PRINTED COPIES OF THIS DOCUMENT ARE NOT CONSIDERED SIGNED AND SEALED AND THE SIGNATURE MUST BE VERIFIED ON ELECTRONIC COPIES

DATE:

JANUARY 28, 2025

LUIS A. BETALLELUZ, JR., P.E. FL. P.E.# 65892
(NOT VALID WITHOUT SIGNATURE AND PROPER SEAL)

SHEET NAME:

CITY DETAILS

SHEET NUMBER: C 9.0

E:\ONEDRIVE - ...\DATA\PROJECTS\23106 - 3233-3237 POMPANO TH\DWG\PLANS 2013-10-11

DRC
PZ23-12000054
03/05/2025