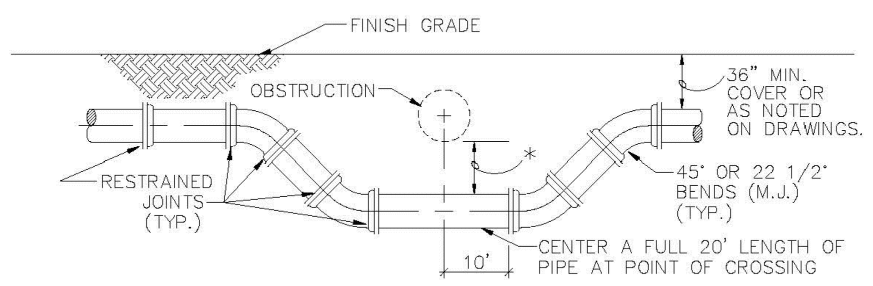

SPECIAL UTILITY CROSSING – FITTING TYPE

* 12" MINIMUM CLEARANCE REQUIRED FOR PRESSURE TYPE SANITARY SEWER, WASTEWATER OR STORMWATER FORCE MAIN OR REUSE WATER MAIN CROSSINGS. IF MINIMUM CLEARANCE CANNOT BE OBTAINED. REFER TO "PROTECTION OF POTABLE WATER SUPPLY" FOR WATER MAIN CROSSINGS. SEE NOTE 2(B), ON STANDARD NO. 122-3

6" MINIMUM CLEARANCE REQUIRED FOR WATER AND STORMWATER, SEWER MAIN CROSSINGS. SEE NOTE 2(A), ON STANDARD NO. 122-3.

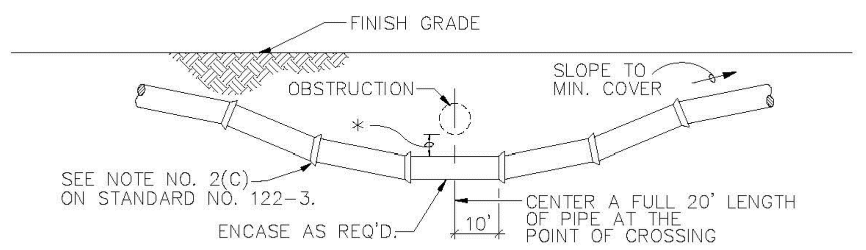

STANDARD UTILITY CROSSING – DEFLECTION TYPE

NOTES:
1. THE DEFLECTION TYPE CROSSING SHALL BE USED WHEREVER POSSIBLE. ONLY UNDER SPECIFIC ORDERS BY THE ENGINEER SHALL THE FITTING TYPE CROSSING BE ALLOWED.
2. CONSTRUCT STANDARD CROSSING USING NO MORE THAN 75% OF MANUFACTURERS' MAXIMUM JOINT DEFLECTION.
3. FOR POTABLE WATER MAINS, REFER TO "PROTECTION OF POTABLE WATER SUPPLY".

UTILITY CROSSINGS

ENGINEERING STANDARDS 2022

REVISIONS		ENGINEERING DIVISION CITY OF POMPANO BEACH	UTILITY CROSSINGS
BY	DATE		DATE: JAN. 2022
S.S.	01/12	SCALE: N.T.S.	DWG. NO. 122-1

PROTECTION OF POTABLE WATER SUPPLY NOTES

A. GENERAL

IN ADDITION TO THESE REQUIREMENTS, ALL POTABLE WATER MAINS CONSTRUCTED IN THE VICINITY OF STORM SEWERS, SANITARY SEWERS OR FORCE MAINS SHALL COMPLY WITH THE APPLICABLE PROVISIONS OF FLORIDA ADMINISTRATIVE CODE CHAPTER 62-555, GREAT LAKES-UPPER MISSISSIPPI RIVER BOARD OF STATE SANITARY ENGINEERS (GLUMRB) "RECOMMENDED STANDARDS FOR WATER WORKS", AND GLUMRB "RECOMMENDED STANDARDS FOR WASTEWATER FACILITIES".

B. DEFINITIONS

FOR THE PURPOSES OF THIS SPECIFICATION, THE WORDS "OTHER PIPE" OR "OTHER PIPES" SHALL MEAN SANITARY SEWER MAIN, SEWAGE FORCE MAIN, STORMWATER MAIN OR ANY COMBINATION THEREOF.

C. CROSS CONNECTIONS PROHIBITED

THERE SHALL BE NO PHYSICAL CONNECTIONS BETWEEN A PUBLIC OR PRIVATE POTABLE WATER SUPPLY SYSTEM AND ANY OTHER PIPE OR APPURTENANCE THERETO WHICH WOULD PERMIT THE PASSAGE OF ANY WASTEWATER, POLLUTED WATER, OR ANY OTHER WATER INTO THE POTABLE SUPPLY. NO WATER PIPE SHALL PASS THROUGH OR COME INTO CONTACT WITH ANY PART OF A SANITARY SEWER MANHOLE OR STORMWATER MANHOLE.

D. RELATION OF OTHER PIPES TO POTABLE WATER MAINS

1. HORIZONTAL SEPARATION

A. NEW OR RELOCATED, UNDERGROUND WATER MAINS SHALL BE LAID TO PROVIDE A HORIZONTAL DISTANCE OF AT LEAST THREE FEET BETWEEN THE OUTSIDE OF THE WATER MAIN AND THE OUTSIDE OF ANY EXISTING OR PROPOSED STORM WATER, STORM WATER FORCE MAIN, OR PIPELINE CONVEYING REUSE WATER NOT REGULATED UNDER PART III OF CHAPTER 62-610,F.A.C.

B. NEW OR RELOCATED, UNDERGROUND WATER MAINS SHALL BE LAID TO PROVIDE A HORIZONTAL DISTANCE OF AT LEAST THREE FEET, AND PREFERABLY TEN FEET, BETWEEN THE OUTSIDE OF THE WATER MAIN AND THE OUTSIDE OF ANY EXISTING OR PROPOSED VACUUM-TYPE SANITARY SEWER.

C. NEW OR RELOCATED, UNDERGROUND WATER MAINS SHALL BE LAID TO PROVIDE A HORIZONTAL DISTANCE OF AT LEAST SIX FEET, AND PREFERABLY TEN FEET, BETWEEN THE OUTSIDE OF THE WATER MAIN AND THE OUTSIDE OF ANY EXISTING OR PROPOSED GRAVITY-OR PRESSURE-TYPE SANITARY SEWER, WASTEWATER FORCE MAIN, OR PIPELINE CONVEYING REUSE WATER NOT REGULATED UNDER CHAPTER 62-610, F.A.C. THE MINIMUM HORIZONTAL SEPARATION DISTANCE BETWEEN WATER MAINS AND GRAVITY TYPE SEWERS SHALL BE REDUCED TO THREE FEET WHERE THE BOTTOM OF THE WATER IS LAID AT LEAST SIX INCHES ABOVE THE TOP OF THE SEWER.

ENGINEERING STANDARDS 2022

REVISIONS		ENGINEERING DIVISION CITY OF POMPANO BEACH	POTABLE WATER SUPPLY NOTES
BY	DATE		DATE: JAN. 2022
S.S.	01/12	SCALE: N.T.S.	DWG. NO. 122-2

D. NEW OR RELOCATED, UNDERGROUND WATER MAINS SHALL BE LAID TO PROVIDE A HORIZONTAL DISTANCE OF AT LEAST TEN FEET BETWEEN THE OUTSIDE OF THE WATER MAIN AND ALL PARTS OF ANY EXISTING OR PROPOSED "ON-SITE SEWAGE TREATMENT AND DISPOSAL SYSTEM".

2. VERTICAL SEPARATION

A. NEW OR RELOCATED, UNDERGROUND WATER MAINS CROSSING ANY EXISTING OR PROPOSED GRAVITY-OR VACUUM-TYPE SANITARY SEWER OR STORM SEWER SHALL BE LAID SO THE OUTSIDE OF THE WATER MAIN IS AT LEAST SIX INCHES, AND PREFERABLY 12 INCHES, ABOVE OR AT LEAST 12 INCHES BELOW THE OUTSIDE OF THE OTHER PIPELINE. HOWEVER, IT IS PREFERABLE TO LAY THE WATER MAIN ABOVE THE OTHER PIPELINE.

B. NEW OR RELOCATED, UNDERGROUND WATER MAINS CROSSING ANY EXISTING OR PROPOSED PRESSURE-TYPE SANITARY SEWER, WASTEWATER OR STORM WATER FORCE MAIN, OR PIPELINE CONVEYING REUSE WATER SHALL BE LAID SO THE OUTSIDE OF THE WATER MAIN IS AT LEAST 12 INCHES, ABOVE OR BELOW THE OUTSIDE THE OTHER PIPELINE. HOWEVER, IT IS PREFERABLE TO LAY THE WATER MAIN ABOVE THE OTHER PIPELINE.

C. AT THE UTILITY CROSSINGS DESCRIBED IN PARAGRAPHS (A) AND (B) ABOVE, ONE FULL LENGTH OF WATER MAIN PIPE SHALL BE CENTERED ABOVE OR BELOW THE OTHER PIPELINE SO THE WATER MAIN JOINTS WILL BE AS FAR AS POSSIBLE FROM THE OTHER PIPELINE. ALTERNATIVELY, AT SUCH CROSSINGS, THE PIPES SHALL BE ARRANGED SO THAT ALL WATER MAIN JOINTS ARE AT LEAST THREE FEET FROM ALL JOINTS IN VACUUM-TYPE SANITARY SEWERS, STORM SEWERS, STORM WATER FORCE MAINS, OR PIPELINES CONVEYING REUSE WATER REGULATED UNDER PART III OF CHAPTER 62-610, F.A.C. AND AT LEAST SIX FEET FROM ALL JOINTS IN GRAVITY- OR PRESSURE-TYPE SANITARY SEWERS, WASTEWATER FORCE MAINS, OR PIPELINES CONVEYING REUSE WATER NOT REGULATED UNDER PART III OR CHAPTER 62-610, F.A.C.

WHERE THE HORIZONTAL CAN BEING LOCATED LESS THAT THE REQUIRED MINIMUM DISTANCES FROM JOINTS IN THE OTHER PIPELINE OR THE HORIZONTAL IS LESS THAT THREE FEET FROM ANOTHER PIPELINE OR THE UNDER GROUND WATER MAIN IS CROSSING ANOTHER PIPELINE AND IS LESS THAN THE REQUIRED MINIMUM VERTICAL DISTANCE FROM THE OTHER PIPELINE, THE CONTRACTOR SHALL CONTACT THE ENGINEER IMMEDIATELY FOR RECOMMENDED SOLUTIONS TO MEET THE FLORIDA OF DEPARTMENT OF ENVIRONMENTAL PROTECTION REQUIREMENTS PER CHAPTER 62-555, F.A.C.

PROTECTION OF POTABLE WATER SUPPLY NOTES

ENGINEERING STANDARDS 2022

REVISIONS		ENGINEERING DIVISION CITY OF POMPANO BEACH	POTABLE WATER SUPPLY NOTES
BY	DATE		DATE: JAN. 2022
S.S.	01/12	SCALE: N.T.S.	DWG. NO. 122-3

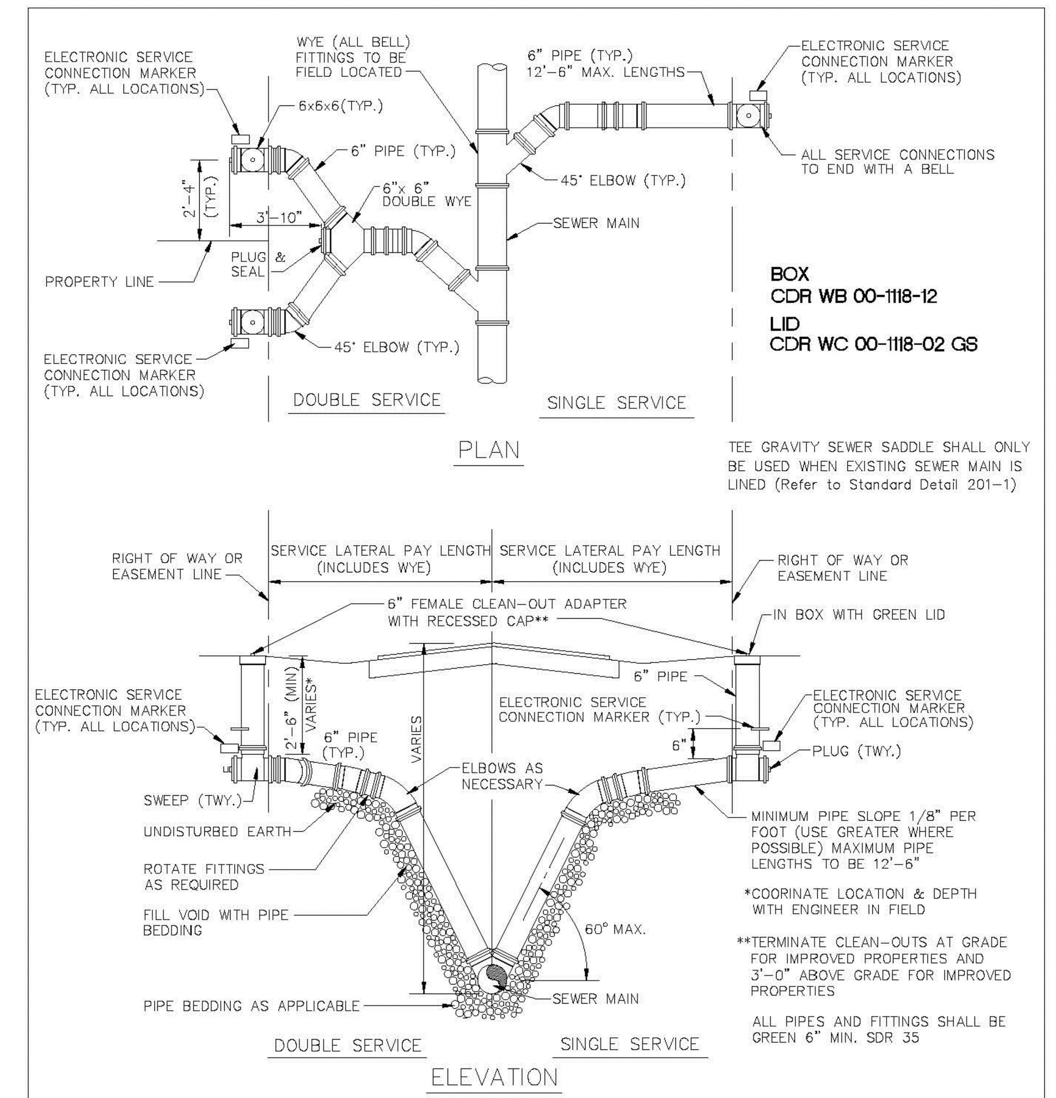

SERVICE LATERALS WITH RISERS

ENGINEERING STANDARDS 2022

REVISIONS		ENGINEERING DIVISION CITY OF POMPANO BEACH	SERVICE LATERALS
BY	DATE		
T.W.	11-2007		DATE: JUNE 2022
S.S.	01/27/12		DWG. NO. 200-1
S.S.	07/10/12	SCALE: N.T.S.	
S.S.	02/05/16		

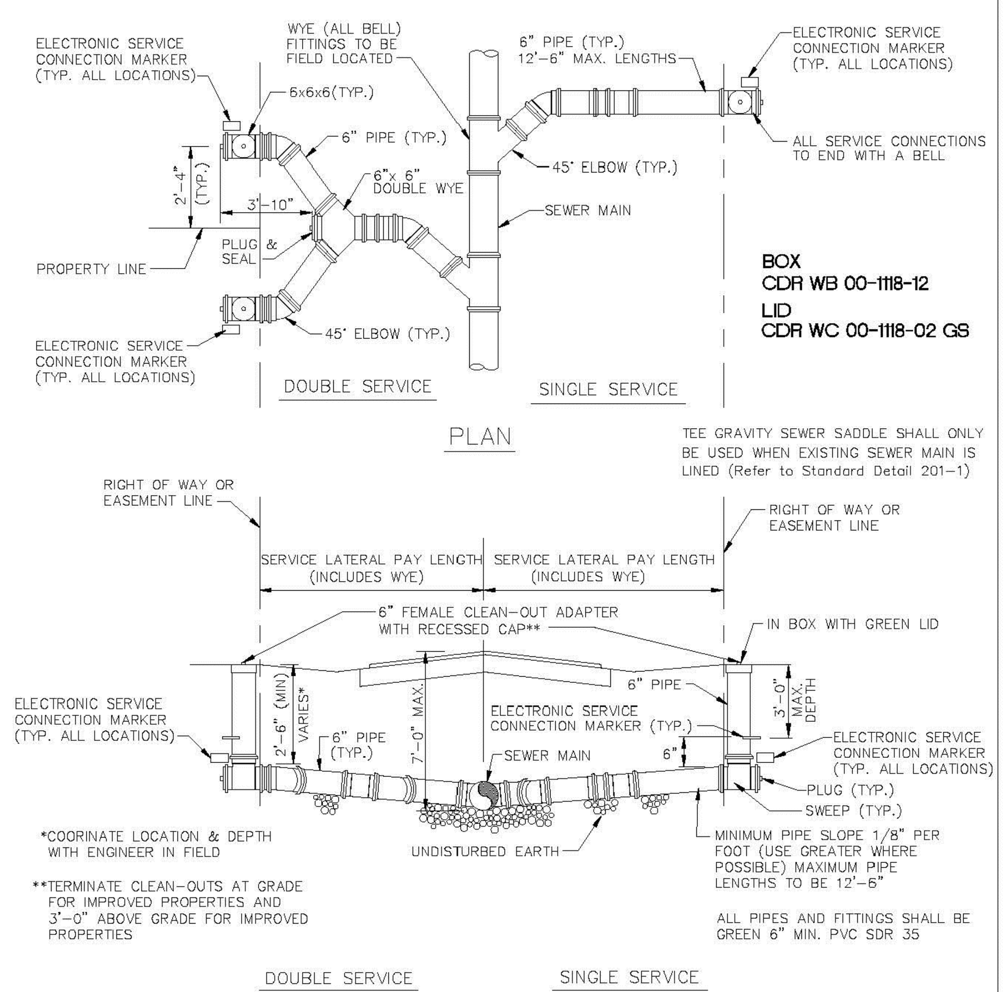

SHALLOW SERVICE LATERALS

ENGINEERING STANDARDS 2022

REVISIONS		ENGINEERING DIVISION CITY OF POMPANO BEACH	SERVICE LATERALS
BY	DATE		
T.W.	11-2007		DATE: JUNE 2022
S.S.	01/27/12		DWG. NO. 200-2
S.S.	07/10/12	SCALE: N.T.S.	
S.S.	02/10/16		

INLET: GASKETED BELL - SDR 35 PVC

Base Casting is ASTM A-48 Class 30 Cast Iron
(Various Contours available to fit 6.275" – 30.00" O.D. Mains)

PVC Adapter is an ASTM D3034, SDR-35 Gasketed Bell

Adapter is cemented permanently in place with two-part urethane adhesive

Base of Saddle is dip-coated in a Waterbased Bituminous Coating

Strap is 24 ga. x 2.5" wide Type 304 Stainless Steel

Strap Pins are .75" dia. Type 303 Stainless Steel

T-Bolts are .375" – 16 Type 304 Stainless Steel

Nuts and Washers are Type 18-8 Stainless Steel

O-Ring is ASTM C-361-77 Tubular Polyisoprene

4" inlet requires a 4" dia. Tap in the Sewer Main

6" inlet requires a 6" dia. Tap in the Sewer Main (Sewer Main must be at least 8" dia.)

Note: This Dwg. supercedes Dwg. No. R-3408-D2

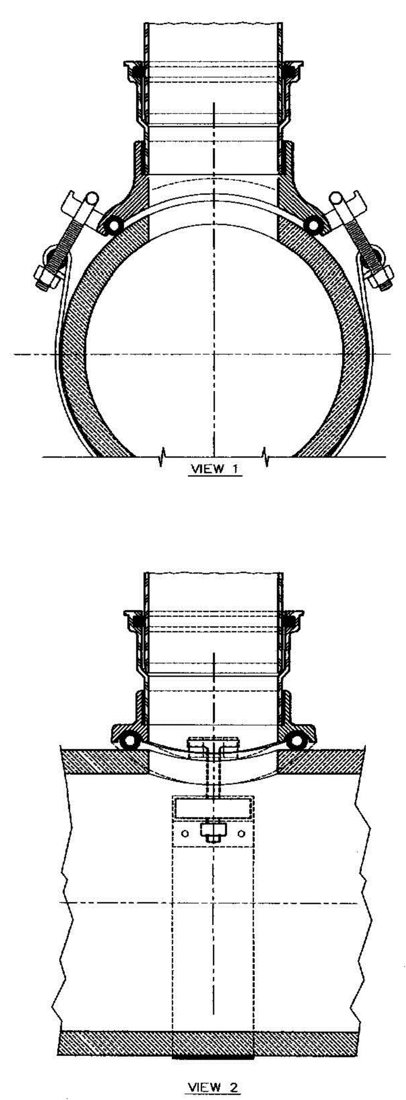

TEE GRAVITY SEWER SADDLE

TO BE USED WHEN A SEWER MAIN HAS BEEN LINED WITH A CURED IN PLACE MATERIAL.

ENGINEERING STANDARDS 2022

REVISIONS		ENGINEERING DIVISION CITY OF POMPANO BEACH	TEE GRAVITY SEWER SADDLE
BY	DATE		DATE: MAY 2022
S.S.	11/23/16	SCALE: N.T.S.	DWG. NO. 201-1

INLET: GASKETED BELL - SDR-35 PVC

Base Casting is ASTM A-48 Class 30 Cast Iron
(Various Contours available to fit 6.275" – 30.00" O.D. Mains)

PVC Adapter is an ASTM D3034, SDR-35 Gasketed Bell

Castings and Adapter cemented permanently in place with two-part urethane adhesive

Base of Saddle dip-coated in Waterbased Bituminous Coating

Strap is 24 ga. X 2.5" wide Type 304 Stainless Steel

Strap Pins are .75" dia. Type 303 Stainless Steel

T-Bolts are .375" – 16 Type 304 Stainless Steel

Nuts and Washers are Type 18-8 Stainless Steel

O-Ring is ASTM C-361-77 Tubular Polyisoprene

4" inlet requires a 4" x 6.50" oval tap in the Sewer Main

6" inlet requires a 6" x 9.25" oval tap in the Sewer Main (Sewer Main must be at least 8" dia.)

Note: This Dwg. supercedes Dwg. No. R-3157-D1

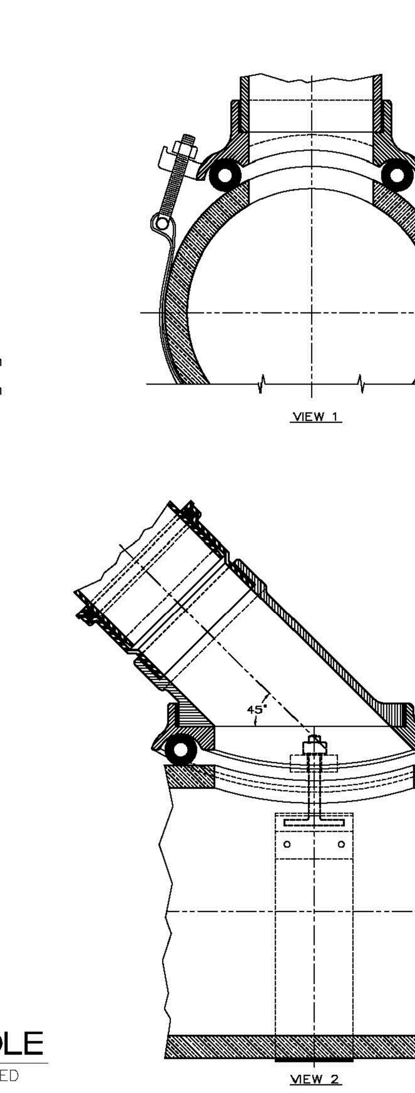

WYE GRAVITY SEWER SADDLE

TO BE USED WHEN A SEWER MAIN HAS BEEN LINED WITH A CURED IN PLACE MATERIAL.

ENGINEERING STANDARDS 2022

REVISIONS		ENGINEERING DIVISION CITY OF POMPANO BEACH	WYE GRAVITY SEWER SADDLE
BY	DATE		DATE: MAY 2022
		SCALE: N.T.S.	DWG. NO. 201-2

Adjustable Repair Coupling

NOTES

- ► Synthetic rubber gasket is strong, durable and resilient to ultraviolet rays, ozone, fungus growth and normal sewer gases. More pliable and easier to install in cold weather applications than an Elastomeric PVC gasket.
- ► Sealing "O" rings under the clamp prevent pipe slippage and create a more positive seal.
- ► More transition couplings for dissimilar pipe types and sizes are comprised of a one-piece transition gasket, eliminating the use of bushings that are difficult to install and easy to lose on the job site.
- ► Surgical Grade 316 stainless steel Nut & Bolt clamps are corrosion resistant, providing outstanding protection in severe environments such as marine applications, poorly aerated or moist soils, contaminated ground conditions (particularly industrial fill sites) and where the ground water contains chloride, sulfates or bicarbonates. Increased band tension of the Nut & Bolt clamp ensures a leak-proof, root-proof seal that is resistant to both infiltration and exfiltration.
- ► Series 300 stainless steel shear band is the heaviest in the industry, over 33% thicker than the competition.
- ► Broadest range of couplings on the market in sizes ranging from 1½" to 96" in diameter. Used for the alteration and rehabilitation of gravity-flow sewage pipes made of clay, cast iron, plastic, concrete, ductile iron, asbestos cement, fiber cement and truss pipe.

Specification:
Furnish and install stainless steel shielded sewer couplings, as manufactured by Mission Rubber Company. Coupling to meet ASTM C 1173. Gasket to meet ASTM C 425 Table 2, to be rubber and be environmentally certified. Series 300 stainless steel shear band with a minimum thickness of .012", surgical grade 316 stainless steel clamps with nut & bolt take up, shear ring and clamps to meet all requirements of ASTM A 240. All stainless steel parts and clamping mechanisms to be **manufactured in the U.S.A.** Transitional sizes to utilize a one piece gasket.

ADJUSTABLE REPAIR COUPLING PVC/CLAY NOTES

ENGINEERING STANDARDS 2022

REVISIONS		ENGINEERING DIVISION CITY OF POMPANO BEACH	ADJUSTABLE REPAIR COUPLING
BY	DATE		DATE: MAY 2022
		SCALE: N.T.S.	DWG. NO. 202-1

AAC

PZ23-12000017

03/05/2025

REVISIONS	DATE	BY

FILE NAME: XXXXXXXXXXXXXXX.DWG

CAULFIELD & WHEELER, INC.
CIVIL ENGINEERING - LAND PLANNING
LANDSCAPE ARCHITECTURE - SURVEYING
7900 GLADES ROAD - SUITE 100
BOCA RATON, FLORIDA 33434
PHONE (561)-392-1991 / FAX (561)-750-1452

OAKS @ PALM AIRE

WATER DISTRIBUTION & SANITARY SEWER DETAILS

POMPANO BEACH, FLORIDA

DATE	06/12/23
DRAWN BY	RHT
F.B./ PG.	N/A
SCALE	n.t.s.

Digitally signed by Ryan Wheeler
Date: 2025.04.02 09:10:56 -04'00'
Adobe Acrobat version: 2024.002.20687

RYAN D. WHEELER
PROFESSIONAL ENGINEER
LICENSE NO. 71477
STATE OF FLORIDA
– FOR THE FIRM –
DATE Apr 02, 2025

JOB #10326

SHT.NO. WS.05

OF 8 SHEETS

Drawing: P:\10326-00-00\drawings\eng\plans\10326WS.dwg\WS.05