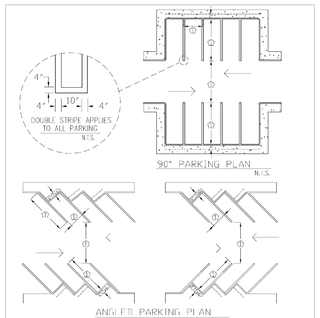

NOTES:

1. INDICATED DIMENSION BY local ZONING ORDINANCE.
2. DURING APPLIES TO ALL PARKING.
3. EACH SPACE SHALL BE DESIGNATED BY FOUR 4 INCH WIDE VISIBLE STRIPING CONSISTING OF WHITE PAINT OR AS APPROVED BY THE CITY.

ENGINEERING STANDARDS 2022

REVISIONS BY	DATE	ENGINEERING DIVISION CITY OF POMPANO BEACH	STANDARD PARKING SPACES
		SCALE: N.T.S.	DATE: MAY 2022 DWG. NO. 300-3

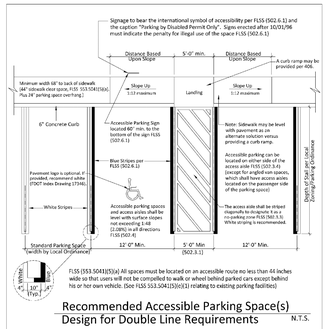

Recommended Accessible Parking Space(s)
Design for Double Line Requirements N.T.S.

THIS TECHNICAL ASSISTANCE DOCUMENT IS INTENDED TO PROVIDE INFORMAL GUIDANCE AND DOES NOT CONSTITUTE A LEGAL INTERPRETATION OF STATUTORY OR REGULATORY CRITERIA.

ENGINEERING STANDARDS 2022

REVISIONS BY	DATE	ENGINEERING DIVISION CITY OF POMPANO BEACH	ACCESSIBLE PARKING SPACES
		SCALE: N.T.S.	DATE: MAY 2022 DWG. NO. 300-4

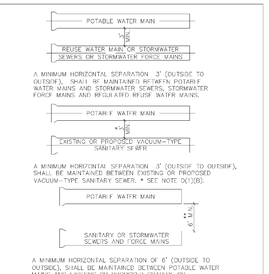

A MINIMUM HORIZONTAL SEPARATION 3' (OUTSIDE TO OUTSIDE), SHALL BE MAINTAINED BETWEEN POTABLE WATER MAINS AND STORMWATER SEWERS, STORMWATER FORCE MAINS AND REGULATED REUSE WATER MAINS.

A MINIMUM HORIZONTAL SEPARATION 3' (OUTSIDE TO OUTSIDE), SHALL BE MAINTAINED BETWEEN POTABLE WATER MAINS AND EXISTING OR PROPOSED GRAVITY-OR PRESSURE TYPE SANITARY SEWER, WASTEWATER FORCE MAIN OR NOT REGULATED REUSE WATER MAIN. ** SEE NOTE D(1)(C).

A MINIMUM HORIZONTAL SEPARATION OF 6' (OUTSIDE TO OUTSIDE), SHALL BE MAINTAINED BETWEEN POTABLE WATER MAINS AND EXISTING OR PROPOSED VACUUM-TYPE SANITARY SEWER. * SEE NOTE D(1)(B).

MINIMUM HORIZONTAL SEPARATION REQUIREMENTS FOR POTABLE WATER, REUSE, STORMWATER AND SEWER LINES

ENGINEERING STANDARDS 2022

REVISIONS BY	DATE	ENGINEERING DIVISION CITY OF POMPANO BEACH	MIN. HORIZONTAL SEPARATION FOR SANITARY SEWER
S.S.	11/20/19	SCALE: N.T.S.	DATE: JUNE 2022 DWG. NO. 209-1

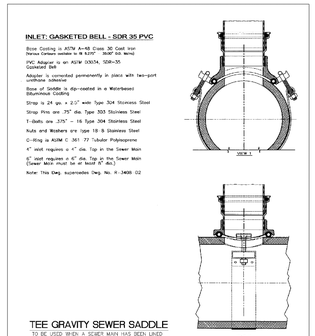

TEE GRAVITY SEWER SADDLE
TO BE USED WHEN A SEWER MAIN HAS BEEN LINED WITH A CURED IN PLACE MATERIAL.

ENGINEERING STANDARDS 2022

REVISIONS BY	DATE	ENGINEERING DIVISION CITY OF POMPANO BEACH	TEE GRAVITY SEWER SADDLE
		SCALE: N.T.S.	DATE: MAY 2022 DWG. NO. 201-1

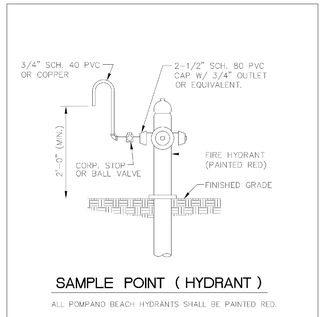

SAMPLE POINT (HYDRANT)

ALL POMPANO BEACH HYDRANTS SHALL BE PAINTED RED.

ALL D.I.P. TO BE PAINTED BLUE ON TOP HALF OF PIPE.

ENGINEERING STANDARDS 2022

REVISIONS BY	DATE	ENGINEERING DIVISION CITY OF POMPANO BEACH	SAMPLE POINT (HYDRANT)
S.S.	04-2006	SCALE: N.T.S.	DATE: MAY 2022 DWG. NO. 101-1

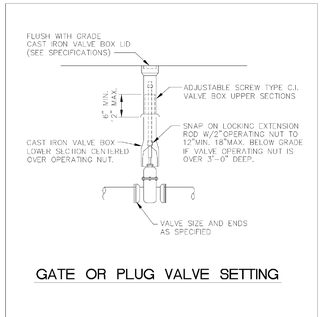

GATE OR PLUG VALVE SETTING

USE MEGALUGS AT ALL PIPE JOINTS

ALL D.I.P. TO BE PAINTED BLUE ON TOP HALF OF PIPE.

ENGINEERING STANDARDS 2022

REVISIONS BY	DATE	ENGINEERING DIVISION CITY OF POMPANO BEACH	GATE OR PLUG VALVE SETTINGS
S.S.	04-2005		
T.R.	11-2007	SCALE: N.T.S.	DATE: MAY 2022 DWG. NO. 103-1

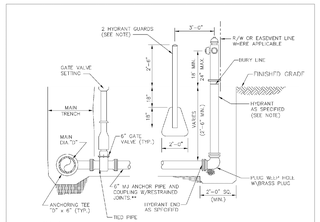

NOTES:

HYDRANT GUARDS TO BE 6" DIAMETER GALVANIZED STEEL PIPE PAINTED YELLOW FILLED WITH CONCRETE. ONLY GUARDS IN LOCATIONS WHERE SIDEWALKS EXIST.

**USE 2-3/4" S.S. TIE RODS WHEN DISTANCE BETWEEN MAIN AND HYDRANT < 10'. TIE RODS WILL BE USED W/RESTRAINED JOINTS OR USE MEGALUGS AT ALL PIPE JOINTS.

HYDRANTS INSTALLED ON EXISTING WATER MAINS MUST USE A MUELLER M/J 90 TAPPING SLEEVE, H-615 OR APPROVED EQUAL.

HYDRANTS CONNECTED TO NEW MAINS SHALL BE CONNECTED USING A HYDRANT TEE.

ALL POMPANO BEACH HYDRANTS SHALL BE PAINTED RED.

TYPICAL FIRE HYDRANT ASSEMBLY

ENGINEERING STANDARDS 2022

REVISIONS BY	DATE	ENGINEERING DIVISION CITY OF POMPANO BEACH	FIRE HYDRANT ASSEMBLY
T.W.	11-2007		
T.R.	10-2012		
S.S.	4-2012	SCALE: N.T.S.	DATE: MAY 2022 DWG. NO. 109-1
S.S.	11-2012		

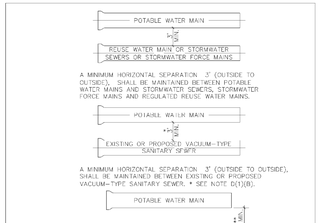

A MINIMUM HORIZONTAL SEPARATION 3' (OUTSIDE TO OUTSIDE), SHALL BE MAINTAINED BETWEEN POTABLE WATER MAINS AND STORMWATER SEWERS, STORMWATER FORCE MAINS AND REGULATED REUSE WATER MAINS.

A MINIMUM HORIZONTAL SEPARATION 3' (OUTSIDE TO OUTSIDE), SHALL BE MAINTAINED BETWEEN POTABLE WATER MAINS AND EXISTING OR PROPOSED GRAVITY-OR PRESSURE TYPE SANITARY SEWER, WASTEWATER FORCE MAIN OR NOT REGULATED REUSE WATER MAIN. ** SEE NOTE D(1)(C).

A MINIMUM HORIZONTAL SEPARATION OF 6' (OUTSIDE TO OUTSIDE), SHALL BE MAINTAINED BETWEEN POTABLE WATER MAINS AND EXISTING OR PROPOSED GRAVITY-OR PRESSURE TYPE SANITARY SEWER, WASTEWATER FORCE MAIN OR NOT REGULATED REUSE WATER MAIN. ** SEE NOTE D(1)(C).

MINIMUM HORIZONTAL SEPARATION REQUIREMENTS FOR POTABLE WATER, REUSE, STORMWATER AND SEWER LINES

ENGINEERING STANDARDS 2022

REVISIONS BY	DATE	ENGINEERING DIVISION CITY OF POMPANO BEACH	MIN. HORIZONTAL SEPARATION FOR POTABLE WATER
S.S.	01/12	SCALE: N.T.S.	DATE: JAN. 2022 DWG. NO. 121-1

PROTECTION OF POTABLE WATER SUPPLY NOTES

A. GENERAL
IN ADDITION TO THOSE REQUIREMENTS, ALL POTABLE WATER MAINS CONSTRUCTED IN THE VICINITY OF STORM SEWERS, SANITARY SEWERS OR FORCE MAINS SHALL COMPLY WITH THE APPLICABLE PROVISIONS OF FLORIDA ADMINISTRATIVE CODE CHAPTER 62-555, GREAT LAKES-UPPER MISSISSIPPI RIVER BOARD OF STATE SANITARY ENGINEERS (GLUMRB) "RECOMMENDED STANDARDS FOR WATER WORKS", AND GLUMRB "RECOMMENDED STANDARDS FOR WASTEWATER FACILITIES".

B. DEFINITIONS
FOR THE PURPOSES OF THIS SPECIFICATION, THE WORDS "OTHER PIPE" OR "OTHER PIPES" SHALL MEAN SANITARY SEWER MAIN, SEWAGE FORCE MAIN, STORMWATER MAIN OR ANY COMBINATION THEREOF.

C. CROSS CONNECTIONS PROHIBITED
THERE SHALL BE NO PHYSICAL CONNECTIONS BETWEEN A PUBLIC OR PRIVATE POTABLE WATER SUPPLY SYSTEM AND ANY OTHER PIPE OR APPURTENANCE THERETO WHICH WOULD PERMIT THE PASSAGE OF ANY WASTEWATER, POLLUTED WATER, OR ANY OTHER WATER INTO THE POTABLE SUPPLY. NO WATER PIPE SHALL PASS THROUGH OR COME INTO CONTACT WITH ANY PART OF A SANITARY SEWER MANHOLE OR STORMWATER MANHOLE.

D. RELATION OF OTHER PIPES TO POTABLE WATER MAINS

1. HORIZONTAL SEPARATION
(A) AND (B) ABOVE, ONE FULL LENGTH OF WATER MAIN PIPE SHALL BE CENTERED ABOVE OR BELOW THE OTHER PIPE SO THAT THE JOINTS IN EITHER PIPE WILL BE AS FAR AS POSSIBLE FROM THE OTHER PIPELINE. AS HORIZONTALLY AT SUCH CROSSINGS, THE PIPES SHALL BE ARRANGED SO THAT ALL WATER MAIN JOINTS ARE AT LEAST THREE FEET FROM ALL JOINTS IN VACUUM-TYPE SANITARY SEWERS, STORM SEWERS, STORM WATER FORCE MAINS, OR PIPELINES CONVEYING REUSE WATER REGULATED UNDER PART III OF CHAPTER 62-610, A.C.
B. NEW OR RELOCATED, UNDERGROUND WATER MAINS SHALL BE LAID TO PROVIDE A HORIZONTAL DISTANCE OF AT LEAST THREE FEET, AND PREFERABLY TEN FEET, BETWEEN THE OUTSIDE OF THE WATER MAIN AND THE OUTSIDE OF ANY EXISTING OR PROPOSED VACUUM-TYPE SANITARY SEWER.
C. NEW OR RELOCATED, UNDERGROUND WATER MAINS SHALL BE LAID TO PROVIDE A HORIZONTAL DISTANCE OF AT LEAST SIX FEET, AND PREFERABLY TEN FEET, BETWEEN THE OUTSIDE OF THE WATER MAIN AND THE OUTSIDE OF ANY EXISTING OR PROPOSED GRAVITY-OR PRESSURE-TYPE SANITARY SEWER, WASTEWATER FORCE MAIN OR PIPELINE CONVEYING REUSE WATER NOT REGULATED UNDER CHAPTER 62-610, F.A.C. THE MINIMUM HORIZONTAL SEPARATION DISTANCE BETWEEN WATER MAINS AND GRAVITY TYPE SEWERS SHALL BE REDUCED TO THREE FEET, PROVIDED THE WATER MAIN IS LAID AT LEAST SIX INCHES ABOVE THE TOP OF THE SEWER.

ENGINEERING STANDARDS 2022

REVISIONS BY	DATE	ENGINEERING DIVISION CITY OF POMPANO BEACH	POTABLE WATER SUPPLY NOTES
S.S.	01/12	SCALE: N.T.S.	DATE: JAN. 2022 DWG. NO. 122-2

D. NEW OR RELOCATED, UNDERGROUND WATER MAINS SHALL BE LAID TO PROVIDE A HORIZONTAL DISTANCE OF AT LEAST TEN FEET BETWEEN THE OUTSIDE OF THE WATER MAIN AND ALL PARTS OF ANY EXISTING OR PROPOSED "ON-SITE SEWAGE TREATMENT AND DISPOSAL SYSTEM".

2. VERTICAL SEPARATION
A. NEW OR RELOCATED, UNDERGROUND WATER MAINS CROSSING ANY EXISTING OR PROPOSED GRAVITY-OR VACUUM-TYPE SANITARY SEWER OR STORM SEWER SHALL BE LAID SO THE OUTSIDE OF THE WATER MAIN IS AT LEAST SIX INCHES, AND PREFERABLY 12 INCHES, ABOVE OR BELOW THE OUTSIDE OF THE OTHER PIPELINE. IT IS PREFERABLE TO LAY THE WATER MAIN ABOVE THE OTHER PIPELINE.
B. NEW OR RELOCATED, UNDERGROUND WATER MAINS CROSSING ANY EXISTING OR PROPOSED PRESSURE-TYPE SANITARY SEWER, WASTEWATER FORCE MAIN OR STORM WATER FORCE MAIN, OR PIPELINE CONVEYING REUSE WATER SHALL BE LAID SO THE OUTSIDE OF THE WATER MAIN IS AT LEAST 12 INCHES, ABOVE OR BELOW THE OUTSIDE THE OTHER PIPELINE. HOWEVER, IT IS PREFERABLE TO LAY THE WATER MAIN ABOVE THE OTHER PIPELINE.
C. AT THE UTILITY CROSSINGS DESCRIBED IN PARAGRAPHS (A) AND (B) ABOVE, ONE FULL LENGTH OF WATER MAIN PIPE SHALL BE CENTERED ABOVE OR BELOW THE OTHER PIPE SO THAT THE JOINTS IN EITHER PIPE WILL BE AS FAR AS POSSIBLE FROM THE OTHER PIPELINE. AS VERTICALLY AT SUCH CROSSINGS, THE PIPES SHALL BE ARRANGED SO THAT ALL WATER MAIN JOINTS ARE AT LEAST THREE FEET FROM ALL JOINTS IN VACUUM-TYPE SANITARY SEWERS, STORM SEWERS, STORM WATER FORCE MAINS, OR PIPELINES CONVEYING REUSE WATER REGULATED UNDER PART III OF CHAPTER 62-610, F.A.C. AND AT LEAST SIX FEET FROM ALL JOINTS IN GRAVITY- OR PRESSURE TYPE SANITARY SEWERS, WASTEWATER FORCE MAINS, OR PIPELINES CONVEYING REUSE WATER NOT REGULATED UNDER PART III OF CHAPTER 62-610, F.A.C.
WHERE THE HORIZONTAL CAN BEING LOCATED LESS THAN THE REQUIRED MINIMUM DISTANCES FOR JOINTS IN THE OTHER PIPELINE OR THE HORIZONTAL IS LESS THAN THREE FEET FROM ANOTHER PIPELINE OR THE PROPOSED GRAVITY-OR PRESSURE-TYPE SANITARY SEWER, WASTEWATER FORCE MAIN OR PIPELINE CONVEYING REUSE WATER NOT REGULATED UNDER CHAPTER 62-610, F.A.C. THE ENGINEER IMMEDIATELY FOR DEPARTMENT OF ENVIRONMENTAL PROTECTION REQUIREMENTS PER CHAPTER 62-555, F.A.C.

PROTECTION OF POTABLE WATER SUPPLY NOTES

ENGINEERING STANDARDS 2022

REVISIONS BY	DATE	ENGINEERING DIVISION CITY OF POMPANO BEACH	POTABLE WATER SUPPLY NOTES
S.S.	01/12	SCALE: N.T.S.	DATE: JAN. 2022 DWG. NO. 122-3

FIRE METERS - OS & Y VALVES, GASKETS & METER

(NEPTUNE MACH 10 Ultrasonic Meter)

SIZE	VALVES (2)	GASKETS (4)	METER w/ Strainer	TOTAL LENGTH
3" w/ 4" X 3" Reducer **	16"	1/2"	30" **	46 1/2"
4"	18"	1/2"	27 1/2"	46"
6"	21"	1/2"	33"	54 1/2"
8"	23"	1/2"	39"	53 1/2"
10"	26"	1/2"	41"	67 1/2"

FIRE &/or Domestic Water SERVICE METERS - TEES, OS & Y VALVES, GASKETS & METERS

(NEPTUNE MACH 10 Ultrasonic Meter)

SIZE	TEES (2)	VALVES (3)	GASKETS (6)	Meter w/ Strainer	TOTAL LENGTH
3" w/ 4" X 3" Reducer **	3" X 3" - 22"	16"	3/4"	30" **	68 3/4"
4"	4" X 3" - 28"	18"	3/4"	27 1/2"	72 1/4"
6"	6" X 4" - 32"	21"	3/4"	33"	80 3/4"
8"	8" X 4" - 36"	23"	3/4"	39"	89 3/4"
10"	10" X 6" - 44"	26"	3/4"	41"	111 3/4"

*All fittings, valves and meters are flanged & all dimensions are from face of flange to face of flange.

NOTE:
PLEASE NOTE THAT WATER METERS 3" AND LARGER ARE SUBJECT TO AN APPROXIMATE ORDER LEAD TIME OF 60 TO 75 BUSINESS DAYS AFTER FULL PAYMENT. PLEASE CONTACT CUSTOMER SERVICE AT 954-786-4637 TO ARRANGE FOR METER PROCUREMENT AND INSTALLATION. LARGE METERS MUST BE AT MINIMUM ORDERED PRIOR TO INITIAL INSPECTIONS.

ENGINEERING STANDARDS 2022

REVISIONS BY	DATE	ENGINEERING DIVISION CITY OF POMPANO BEACH	METER INSTALL DIMENSION LIST
T.R.	02-2006		
S.S.	11-2016		
A.S.	01-2022	SCALE: N.T.S.	DATE: JAN. 2022 DWG. NO. 106-4

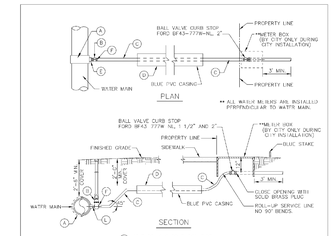

TYPICAL 1 1/2" AND 2" WATER SERVICE

ENGINEERING STANDARDS 2022

REVISIONS BY	DATE	ENGINEERING DIVISION CITY OF POMPANO BEACH	TYPICAL 2" WATER SERVICE
S.S.	03-2011		
S.S.	05-2012		
S.S.	11-2018	SCALE: N.T.S.	DATE: APRIL 2022 DWG. NO. 107-2
A.S.	06-2021		

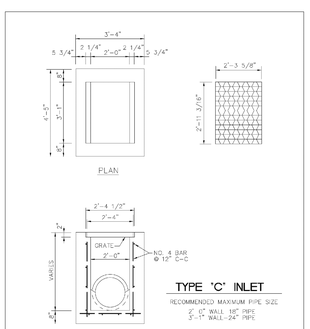

TYPE "C" INLET

RECOMMENDED MAXIMUM PIPE SIZE
2' 0" WALL 18" PIPE
3'-1" WALL-24" PIPE

ENGINEERING STANDARDS 2022

REVISIONS BY	DATE	ENGINEERING DIVISION CITY OF POMPANO BEACH	TYPE "C" INLET
S.S.	09-11	SCALE: N.T.S.	DATE: JUNE 2022 DWG. NO. 400-1

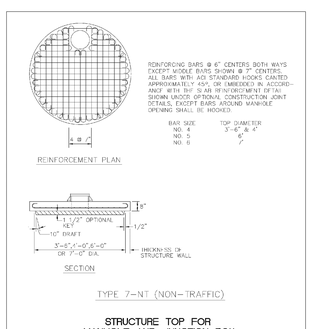

TYPE 7-NT (NON-TRAFFIC)

STRUCTURE TOP FOR MANHOLE AND JUNCTION BOX

ENGINEERING STANDARDS 2022

REVISIONS BY	DATE	ENGINEERING DIVISION CITY OF POMPANO BEACH	STRUCTURE TOP (TYPE 7-NT)
		SCALE: N.T.S.	DATE: JUNE 2022 DWG. NO. 408-1

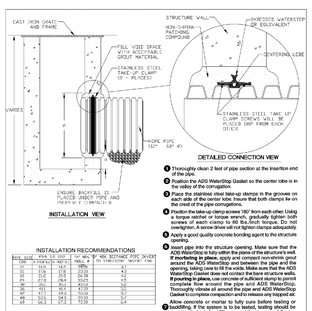

INSTALLATION RECOMMENDATIONS

NOM. SIZE	PIPE OD	PIPE WALL	12" MIN. HOLE	18" MIN. DISTANCE BETWEEN PIPE END & STRUCTURE WALL	24" MIN.
12	13.2	12.2	18"Dia	4.2	
15	16.5	15.5	21"Dia	4.2	
18	19.8	18.8	24"Dia	4.5	
21	23.1	22.1	27"Dia	4.5	
24	26.4	25.4	30"Dia	5.2	
27	29.7	28.7	33"Dia	5.2	
30	33.0	32.0	36"Dia	5.2	
36	39.6	37.6	42"Dia	6.4	

1. Thoroughly clean 2 feet of pipe section at the insertion end of the pipe.
2. Position the ADS WaterStop Gasket so the center lobe is in the pipe end corrugation.
3. Place the stainless steel take-up clamps in the grooves on each side of the center lobe. Ensure that both clamps lie on the crest of the pipe corrugations.
4. Position the take-up clamp screws 180° from each other. Using a torque ratchet or torque wrench, gradually tighten both screws of each clamp to 60 lbs.-inch torque. Do not exceed 60 lbs.-inch torque or damage to the gasket may occur.
5. Apply a good quality concrete bonding agent to the structure opening.
6. Insert pipe into the structure opening. Make sure that the ADS WaterStop is fully within the plane of the structure's wall. Fill the void space with a non-shrink grout or concrete around the ADS WaterStop and between the pipe and the opening, taking care to fill the voids. Make sure that the ADS WaterStop Gasket does not contact the bare structure walls. **If pouring in-place,** use concrete of sufficient slump to permit flowing around the ADS WaterStop. Do not use "dry pack". Thoroughly vibrate all around the pipe and ADS WaterStop Gasket to complete compaction and to release any trapped air.
7. Allow concrete or mortar to fully cure before testing or backfilling. If the system is to be tested, testing should be performed after the concrete has cured. Follow the manufacturer's all recommendations and requirements of the test system manufacturer. Plug any vent holes in the N-12 pipe prior to testing.
8. Backfill the N-12 pipe following recommendations in ADS Product Bulletin 10.10, *Installing N-12 Storm, Sanitary Sewer and Culvert Pipe.*

WATER STOP SEAL

ENGINEERING STANDARDS 2022

REVISIONS BY	DATE	ENGINEERING DIVISION CITY OF POMPANO BEACH	WATER STOP SEAL
TCW	04-06	SCALE: N.T.S.	DATE: MAY 2022 DWG. NO. 414-1

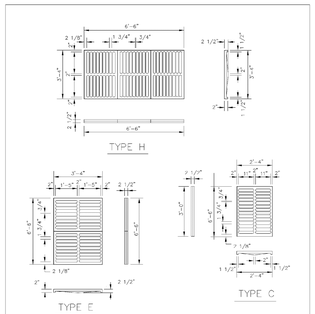

CAST IRON GRATES

ENGINEERING STANDARDS 2022

REVISIONS BY	DATE	ENGINEERING DIVISION CITY OF POMPANO BEACH	CAST IRON GRATES
		SCALE: N.T.S.	DATE: JUNE 2022 DWG. NO. 410-1

BOHLER

SITE CIVIL AND CONSULTING ENGINEERING
LAND SURVEYING
PROGRAM MANAGEMENT
LANDSCAPE ARCHITECTURE
CONSTRUCTION MANAGEMENT
PERMITTING SERVICES
TRANSPORTATION SERVICES

THE INFORMATION, DESIGN AND CONTENT OF THIS PLAN ARE PROPRIETARY AND SHALL NOT BE COPIED OR USED FOR ANY PURPOSE WITHOUT PRIOR WRITTEN AUTHORIZATION FROM BOHLER. ONLY APPROVED, SIGNED AND SEALED PLANS SHALL BE UTILIZED FOR CONSTRUCTION PURPOSES.

REVISIONS

REV	DATE	COMMENT	DRAWN BY / CHECKED BY

Sunshine811

Call 811 or visit sunshine811.com two full business days before digging to have buried facilities located and marked.

Check positive response codes before you dig!

ISSUED FOR MUNICIPAL & AGENCY REVIEW & APPROVAL

THIS DRAWING IS INTENDED FOR MUNICIPAL AND/OR AGENCY REVIEW AND APPROVAL. IT IS NOT INTENDED AS A CONSTRUCTION DOCUMENT UNLESS INDICATED OTHERWISE.

PROJECT No.:	FLB240130.00-0A
DRAWN BY:	JH
CHECKED BY:	AS
DATE:	09/11/2024
CAD I.D.:	P-CIVIL-CNDS

PROJECT:

PROP. SITE PLAN DOCUMENTS

FOR

POMPANO PICKLE, LLC

PROPOSED DEVELOPMENT

210-217 NE 3RD STREET
POMPANO BEACH, FL
BROWARD COUNTY

BOHLER
1900 NW CORPORATE BOULEVARD
SUITE 101E
BOCA RATON, FLORIDA 33431
Phone: (561) 571-0280
Fax: (561) 571-0281
FLORIDA BUSINESS CERT. OF AUTH. No. 30780

REGISTERED PROFESSIONAL ENGINEER No. 82408 STATE OF FLORIDA

Andrew Savage
E=asavage@bohlerengr.com, CN=Andrew Savage, O=Bohler Engineering FL LLC, L=Boca Raton, S=Florida, SERIALNUMBER=MA5202406056935, C=US
2024.09.09 14:40:51-04'00'

THIS ITEM HAS BEEN DIGITALLY SIGNED AND SEALED BY ANDREW RONALD SAVAGE, PE. ON THE DATE ADJACENT TO THE SEAL. PRINTED COPIES OF THIS DOCUMENT ARE NOT CONSIDERED SIGNED AND SEALED AND THE SIGNATURE MUST BE VERIFIED ON ANY ELECTRONIC COPIES.

SHEET TITLE:

CONSTRUCTION DETAILS

SHEET NUMBER:

C-901

DRC
PZ24-12000019
11/06/2024

Sep 09, 2024
H:\2024\FLB240130.00\CAD\DRAWINGS\PLAN SETS\CIVIL SITE PLANS\P-CIVIL-CNDS-FLB240130.00-0A----LAYOUT: C-901 DETL
JH