DRC
PZ24-12000014
09/04/2024

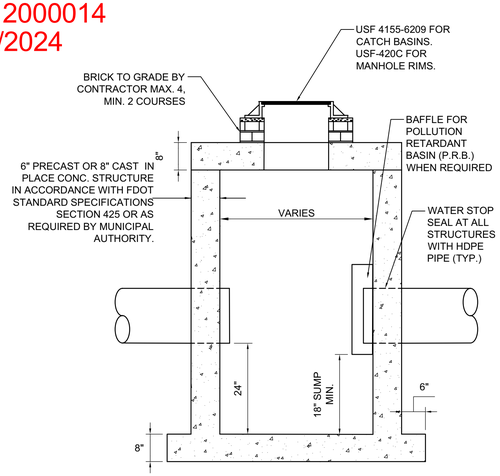

NOTES:
1. STRUCTURE MANUFACTURER AND/OR CONTRACTOR SHALL CONFIRM ALL STEEL REINFORCEMENT MEETS FDOT STANDARDS PER INDEX 425-010, SECTION 415 AND 425 PRIOR TO SUBMITTING ANY SHOP DRAWINGS FOR APPROVAL.
2. LOCKING GRATES TO BE PROVIDED.

11 CATCH BASIN / DRAINAGE MANHOLE DETAIL

NOT TO SCALE

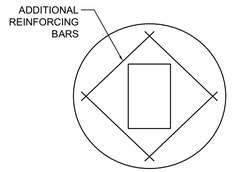

PLAN VIEW
TOP SLAB
FOR CATCH BASINS

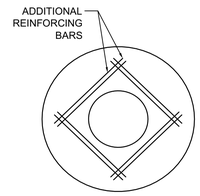

PLAN VIEW
TOP SLAB
FOR MANHOLES

12 CATCH BASIN / MANHOLE FRAME DETAIL

NOT TO SCALE

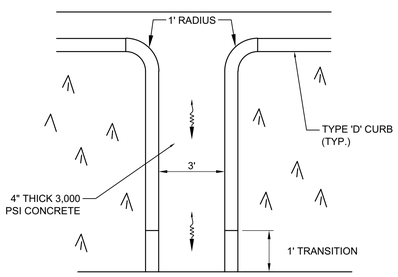

PLAN

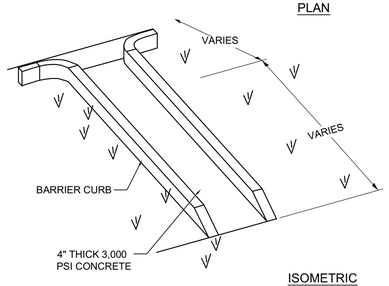

ISOMETRIC

14 CONCRETE FLUME DETAIL

NOT TO SCALE

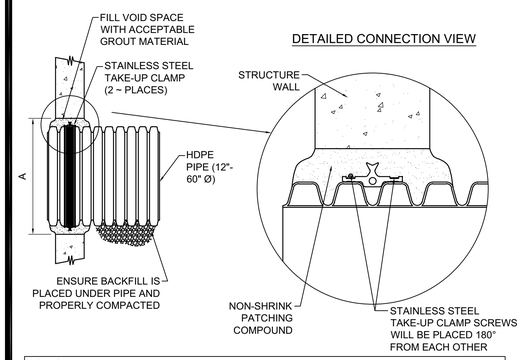

NOTES:
PERFORMANCE HIGHLY DEPENDENT ON INSTALLATION. CONTRACTOR MUST ENSURE MANHOLE GASKET IS UNIFORMLY SEATED AROUND STRUCTURE ADAPTER. EXTRA PRECAUTIONS MUST BE TAKEN TO PREVENT DIFFERENTIAL SETTLEMENT BETWEEN THE PIPE AND MANHOLE.

SEE ADS STANDARD DETAIL STD-201 AND ADS INSTALLATION GUIDE 1.05: WATERSTOP INSTALLATION FOR INSTALLATION RECOMMENDATIONS.

PIPE SIZE	PIPE OD		"A" MIN. HOLE DIA.	MIN. DISTANCE PIPE INVERT TO STRUCTURE INVERT
	A-PROFILE	H-PROFILE		
12"	14.5"	N/A	19.5"	3.7"
15"	17.6"	N/A	23.00"	4.0"
18"	21.2"	N/A	26.50"	4.2"
24"	27.8"	N/A	33.25"	4.5
30"	35.1"	N/A	40.50"	5.2"
36"	41.1"	41.1"	47.00"	5.5"
42"	47.7"	48.0"	53.00"	5.7"
48"	53.6"	54.0"	59.00"	5.7"
60"	66.3"	67.3"	72.00"	6.4"

15 GROUTED MANHOLE CONNECTION (HDPE PIPE) DETAIL

NOT TO SCALE

DRC
PZ24-12000014
10/16/2024

KEITH
301 East Atlantic Blvd.
Pompano Beach, FL 33060
PH: (954) 788-3400
Florida Engineering Business License: CA7928
Florida Surveyor and Mapper Business License: LB6860
Florida Landscape Architecture Business License: LC26000457

REVISIONS

NO.	DESCRIPTION	DATE

RESPONSIBILITY FOR THE USE OF THESE PLANS PRIOR TO OBTAINING PERMITS FROM ALL AGENCIES HAVING JURISDICTION OVER THE PROJECT WILL FALL SOLELY UPON THE USER.

ISSUE DATE: 07/30/24
DESIGNED BY: NW
DRAWN BY: CD
CHECKED BY: NW
BID-CONTRACT:

This item has been digitally signed and sealed by **NILES T. WARRICK, P.E.** on the date adjacent to the seal.

NILES T. WARRICK LICENSE No. 94320 STATE OF FLORIDA PROFESSIONAL ENGINEER

Printed copies of this document are not considered signed and sealed and the signature must be verified on any electronic copies.

2024.07.30 12:13:44-04'00'

NILES T. WARRICK, P.E.
FLORIDA REG. NO. 94320
(FOR THE FIRM)

CLIENT
VINCENTO THROWER, THOMAS GRANER TRUSTEE

PROJECT
2851 DR. MLK JR. BLVD., POMPANO BEACH

SHEET TITLE
PAVING, GRADING, DRAINAGE, AND UTILITY DETAILS

SHEET NUMBER CP-502
PROJECT NUMBER 14232.00

STATUS: PRELIMINARY

Plotted by: cdelanoy On 7/30/2024 11:59 AM
Drawing name: H:\14232.00 - 2851 Dr. MLK Jr. Blvd. - 2851 Dr. MLK Jr. Blvd. Trust\Engineering\Cad\14232.00-CP-5XX.dwg