COPYRIGHT 2017 GALLO HERBERT ARCHITECTS

IT IS A VIOLATION OF THE LAW FOR ANY PERSON, UNLESS ACTING UNDER THE DIRECTION OF A LICENSED ARCHITECT TO ALTER THESE PLANS AND SPECIFICATIONS." THIS DOCUMENT CONTAINS PROPERTY INFORMATION AND SHALL NOT BE USED OR REPRODUCED, OR ITS CONTENTS DISCLOSED, IN WHOLE OR IN PART, WITHOUT THE PRIOR WRITTEN CONSENT OF GALLO HERBERT ARCHITECTS
CONTRACTOR(S) SHALL VERIFY EXISTING CONDITIONS AND CORRELATE DIMENSIONS PRIOR TO PROVIDING THE WORK DETAILED IN THESE DRAWINGS, AND SHALL PROMPTLY NOTIFY THE DESIGNER OF ANY DISCREPANCIES.

Exhibit B
Conceptual Plan

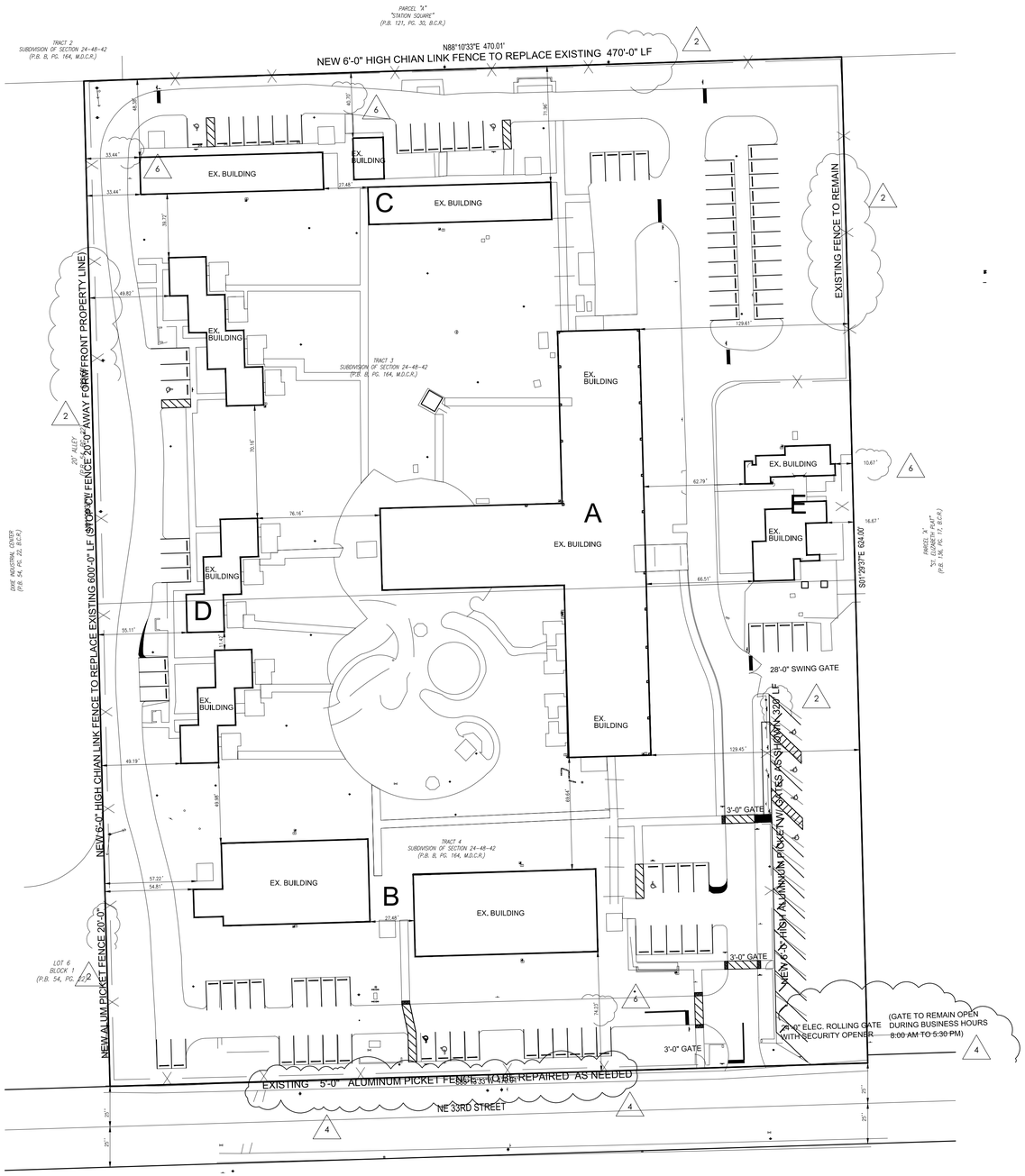

A1 SITE PLAN
1" = 40'-0"

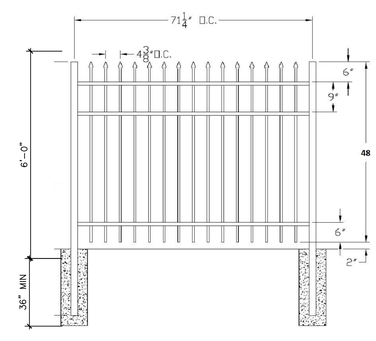

A6 NEW ALUM. PICKET FENCE DETAIL
3/4" = 1'-0"

ZONING CALCULATIONS

LOT AREA NET: ..... 293,184 SF (6.731 ACRES)
LOT AREA GROSS: ..... 304,920 SF (7.000 ACRES)
ZONING DISTRICT: RM-12
LAND USE DESIGNATION..... (LOW-MEDIUM RESIDENTIAL 10)
DENSITY PERMITTED ..... 10 DU PER GROSS ACRE = 70 UNITS
AFFORDABLE HOUSING BONUS DENSITY ..... = 70 UNITS
CURRENT PERMITTED DENSITY (GROSS DENSITY + BONUS) ..... = 140 UNITS
CURRENT DENSITY (LEGAL NON-CONFORMING) ..... = 153 UNITS

PRIMARY USE - MULTIFAMILY RESIDENTIAL (AFFORDABLE SENIOR)
ACCESSORY USES - ADMINISTRATION (LESS THAN 10%)

SETBACKS
FRONT: .....25' + 1'/ADDITIONAL 4' OF HIEGHT ABOVE 20' = 74.23' provided
SIDE : ..... 8' + 1'/ADDITIONAL 4' OF HIEGHT ABOVE 20' = 10.67' provided
REAR: .....10' + 1' / ADDITIONAL 4' OF HEIGHT ABOVE 20' = 40.70' provided

SPACING BETWEEN PRIMARY BUILDINGS - 39.72'

MAXIMUM HEIGHT PERMITTED: ..... 35 FEET (SEE NOTE 1)
EXISTING MAXIMUM BUILDING HEIGHT..... 40'-11" FEET (SEE NOTE 1)

TOTAL LOT COVERAGE: ..... . 44,712 SF 15.25%
IMPERVIOUS AREA HARDSCAPE/PAVING..... 110,239 SF 37.60%
PERVIOUS AREA PROVIDED..... 138,233 SF 47.15%

LOT COVERAGE	TOTAL
BUILDING A	19,251.00
BUILDING B	11,375.00
BUILDING C	6,296.00
BUILDING D	5,420.00
BUILDING E	2,370.00
TOTAL CONSTRUCTION AREA	44,712.00

PARKING CALCULATIONS	SPACES
1 SPACE PER STUDIO + 1.5 SPACE PER 1 BR = REQUIRED	154.50
SPACES PROVIDED (SEE NOTE 2)	130.00
	-24.50

LEVEL	STUDIO 470 SF NOTE 3		1 BEDROOM		2 BEDROOM 800 - 1300 SF		SUBTOTAL	
	DU	PKG	DU	PKG	DU	PKG	DU	PKG
BUILDING A	84	84	-	-	1	1.5	85	
BUILDING B	36	36	-	-	-	-	36	
BUILDING C	20	20	-	-	-	-	20	
BLDGS D	10	10	-	-	-	-	10	
BUILDING E	-	-	-	-	2	3	2	
TOTAL UNITS	150	150	-	-	3	4.5	153	154.5

NOTE 1 – BUILDING HEIGHT WAIVER TO BE APPLIED FOR UPON REZONING
NOTE 2 – PARKING REDUCTION WAIVER TO BE APPLIED FOR UPON REZONING
NOTE 3 – STUDIO SIZE WAIVER TO BE APPLIED FOR UPON REZONING
14.35 % PROVIDED .. (14,792 SF)

WALLS AND VERTICAL CIRCULAT: 1115

CONSTRUCTION AREA	UNITS	AMENITIES/ SERVICE	CIRCULATIONS	TOTAL
FIRST FLOOR	7,949.00	4,603.00	2,240.00	14,792.00
SECOND FLOOR	10,373.00	1,151.00	2,398.00	13,922.00
THIRD FLOOR	10,443.00	906.00	2,398.00	13,747.00
TOTAL CONSTRUCTION AREA	28,765.00	6,660.00	7,036.00	42,461.00

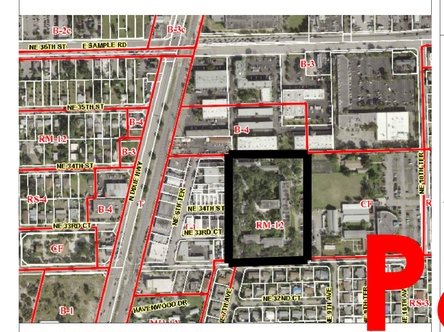

LOCATION MAP
SCALE: NTS

GALLO HERBERT ARCHITECTS
1311 W NEWPORT CENTER DRIVE DEERFIELD BEACH, FLORIDA 33442 PH. 954.794.0300 FX. 954.794.0301
AA226001731

SEAL
☐ WILLIAM J. GALLO FL AR0008440

Electronic Signature Serial Number
3B 67 2A 93 FB 5D 29 E6 9E 7D
☐ BRIAN P. HERBERT FL AR0015474

PROJECT
CHMS
St. ELIZABETH GARDENS APARTMENTS

801 NE 33rd St.
Pompano Beach, Florida 33064

OWNER

REVISIONS

No.	Description	Date
	PERMIT SET	12-15-17
	PERMIT / GC COMM	2-16-18
	PRICING REVIEW COM	2/26/18
	2ND RND PERMIT REV	7/5/18
	LA REVIEW COM	9/1/18
	DRC COMMENTS	2/21/19

PROJECT STATUS
C.D.
DATE
12-15-2017
PROJECT NUMBER
60-2017
SCALE
AS SHOWN
DRAWN BY H3D
CHECKED BY BPH
DRAWING TITLE
SITE PLAN
DRAWING NUMBER
AS-101

P&Z
PZ19-05000001
3/27/2019