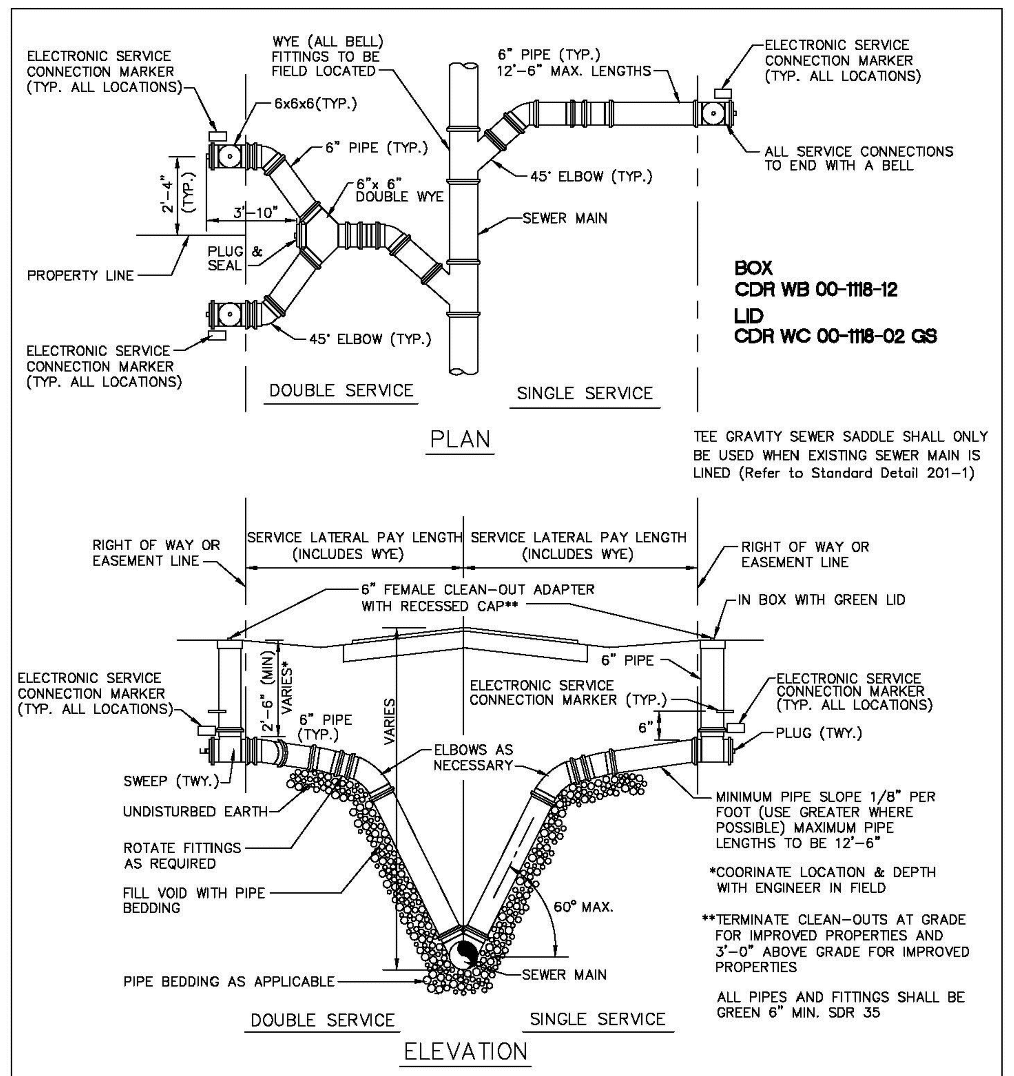

SERVICE LATERALS WITH RISERS

ENGINEERING STANDARDS 2025

REVISIONS		ENGINEERING DIVISION CITY OF POMPANO BEACH	SERVICE LATERALS
BY	DATE		DATE: JUNE 2022
T.W.	11-2007		DWG. NO. 200-1
S.S.	01/27/12		
S.S.	07/10/12	SCALE: N.T.S.	
S.S.	02/05/16		

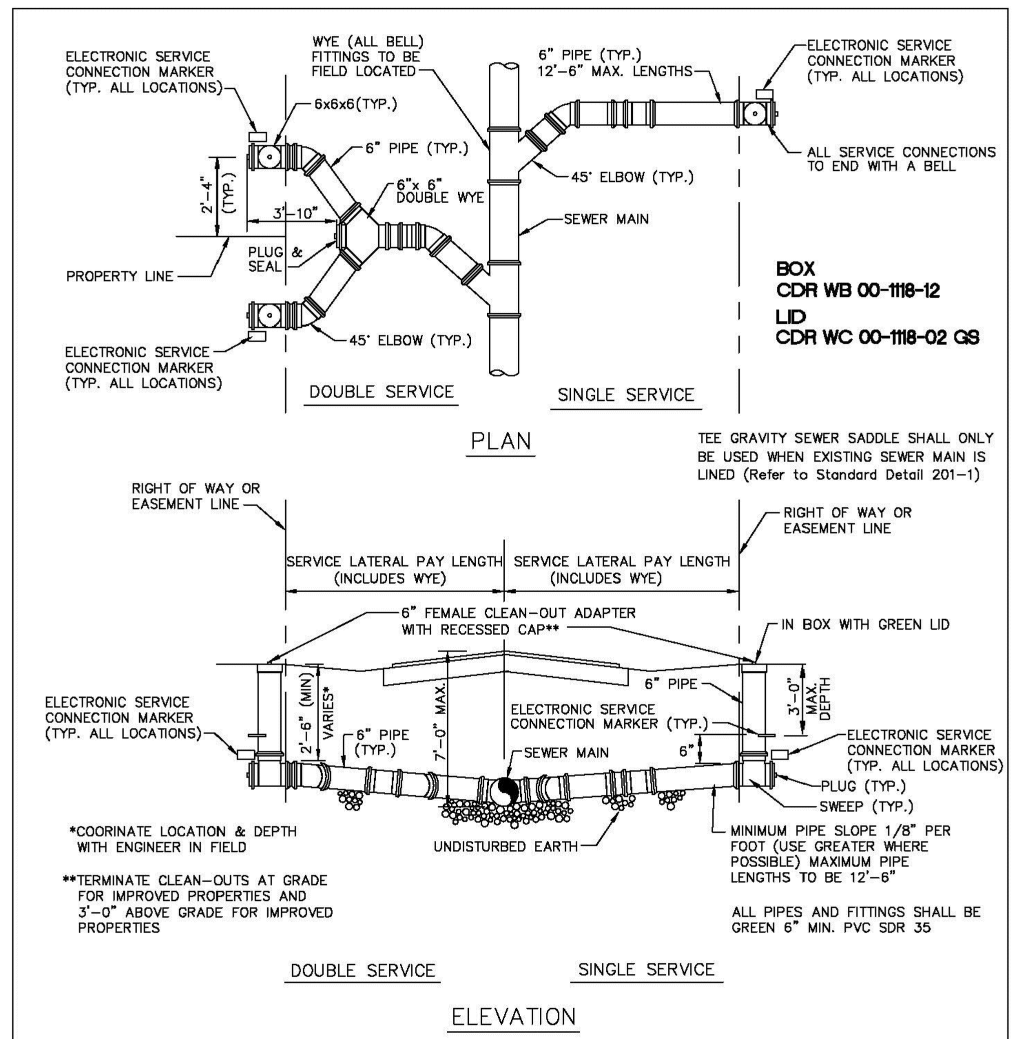

SHALLOW SERVICE LATERALS

ENGINEERING STANDARDS 2025

REVISIONS		ENGINEERING DIVISION CITY OF POMPANO BEACH	SERVICE LATERALS
BY	DATE		DATE: JUNE 2022
T.W.	11-2007		DWG. NO. 200-2
S.S.	01/27/12		
S.S.	07/10/12	SCALE: N.T.S.	
S.S.	02/10/16		

INLET: GASKETED BELL - SDR 35 PVC

Base Casting is ASTM A-48 Class 30 Cast Iron (Various Contours available to fit 6.275" – 30.00" O.D. Mains)

PVC Adapter is an ASTM D3034, SDR-35 Gasketed Bell

Adapter is cemented permanently in place with two-part urethane adhesive

Base of Saddle is dip-coated in a Waterbased Bituminous Coating

Strap is 24 ga. x 2.5" wide Type 304 Stainless Steel

Strap Pins are .75" dia. Type 303 Stainless Steel

T-Bolts are .375" – 16 Type 304 Stainless Steel

Nuts and Washers are Type 18-8 Stainless Steel

O-Ring is ASTM C-361-77 Tubular Polyisoprene

4" inlet requires a 4" dia. Tap in the Sewer Main

6" inlet requires a 6" dia. Tap in the Sewer Main (Sewer Main must be at least 8" dia.)

Note: This Dwg. supercedes Dwg. No. R-3408-D2

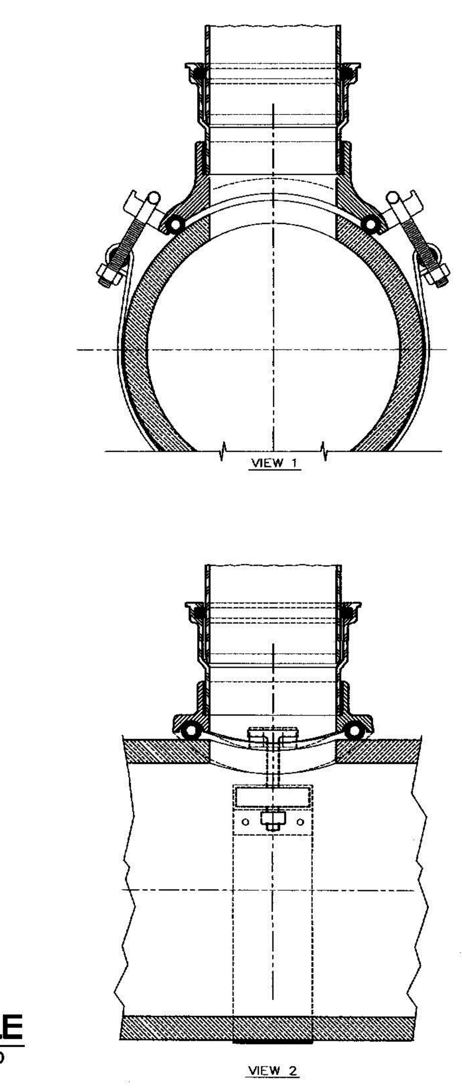

TEE GRAVITY SEWER SADDLE

TO BE USED WHEN A SEWER MAIN HAS BEEN LINED WITH A CURED IN PLACE MATERIAL.

ENGINEERING STANDARDS 2025

REVISIONS		ENGINEERING DIVISION CITY OF POMPANO BEACH	TEE GRAVITY SEWER SADDLE
BY	DATE		DATE: MAY 2022
S.S.	11/23/16		DWG. NO. 201-1
		SCALE: N.T.S.	

INLET: GASKETED BELL - SDR-35 PVC

Base Casting is ASTM A-48 Class 30 Cast Iron (Various Contours available to fit 6.275" – 30.00" O.D. Mains)

PVC Adapter is an ASTM D3034, SDR-35 Gasketed Bell

Castings and Adapter cemented permanently in place with two-part urethane adhesive

Base of Saddle dip-coated in Waterbased Bituminous Coating

Strap is 24 ga. X 2.5" wide Type 304 Stainless Steel

Strap Pins are .75" dia. Type 303 Stainless Steel

T-Bolts are .375" – 16 Type 304 Stainless Steel

Nuts and Washers are Type 18-8 Stainless Steel

O-Ring is ASTM C-361-77 Tubular Polyisoprene

4" inlet requires a 4" x 6.50" oval tap in the Sewer Main

6" inlet requires a 6" x 9.25" oval tap in the Sewer Main (Sewer Main must be at least 8" dia.)

Note: This Dwg. supercedes Dwg. No. R-3157-D1

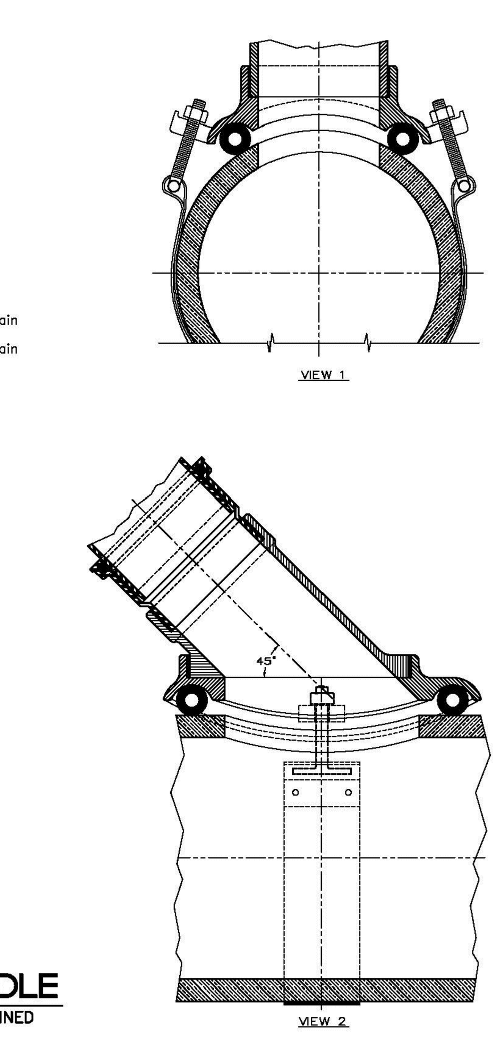

WYE GRAVITY SEWER SADDLE

TO BE USED WHEN A SEWER MAIN HAS BEEN LINED WITH A CURED IN PLACE MATERIAL.

ENGINEERING STANDARDS 2025

REVISIONS		ENGINEERING DIVISION CITY OF POMPANO BEACH	WYE GRAVITY SEWER SADDLE
BY	DATE		DATE: MAY 2022
			DWG. NO. 201-2
		SCALE: N.T.S.	

Adjustable Repair Coupling

NOTES

- Synthetic rubber gasket is strong, durable and resilient to ultraviolet rays, ozone, fungus growth and normal sewer gases. More pliable and easier to install in cold weather applications than an Elastomeric PVC gasket.
- Sealing "O" rings under the clamp prevent pipe slippage and create a more positive seal.
- More transition couplings for dissimilar pipe types and sizes are comprised of a one-piece transition gasket, eliminating the use of bushings that are difficult to install and easy to lose on the job site.
- Surgical Grade 316 stainless steel Nut & Bolt clamps are corrosion resistant, providing outstanding protection in severe environments such as marine applications, poorly aerated or moist soils, contaminated ground conditions (particularly industrial fill sites) and where the ground water contains chloride, sulfates or bicarbonates. Increased band tension of the Nut & Bolt clamp ensures a leak-proof, root-proof seal that is resistant to both infiltration and exfiltration.
- Series 300 stainless steel shear band is the heaviest in the industry, over 33% thicker than the competition.
- Broadest range of couplings on the market in sizes ranging from 1½" to 96" in diameter. Used for the alteration and rehabilitation of gravity-flow sewage pipes made of clay, cast iron, plastic, concrete, ductile iron, asbestos cement, fiber cement and truss pipe.

Specification:
Furnish and install stainless steel shielded sewer couplings, as manufactured by Mission Rubber Company. Coupling to meet ASTM C 1173. Gasket to meet ASTM C 425 Table 2, to be rubber and be environmentally certified. Series 300 stainless steel shear band with a minimum thickness of .012", surgical grade 316 stainless steel clamps with nut & bolt take up, shear ring and clamps to meet all requirements of ASTM A 240. All stainless steel parts and clamping mechanisms to be **manufactured in the U.S.A.** Transitional sizes to utilize a one piece gasket.

ADJUSTABLE REPAIR COUPLING PVC/CLAY NOTES

ENGINEERING STANDARDS 2025

REVISIONS		ENGINEERING DIVISION CITY OF POMPANO BEACH	ADJUSTABLE REPAIR COUPLING
BY	DATE		DATE: MAY 2022
			DWG. NO. 202-1
		SCALE: N.T.S.	

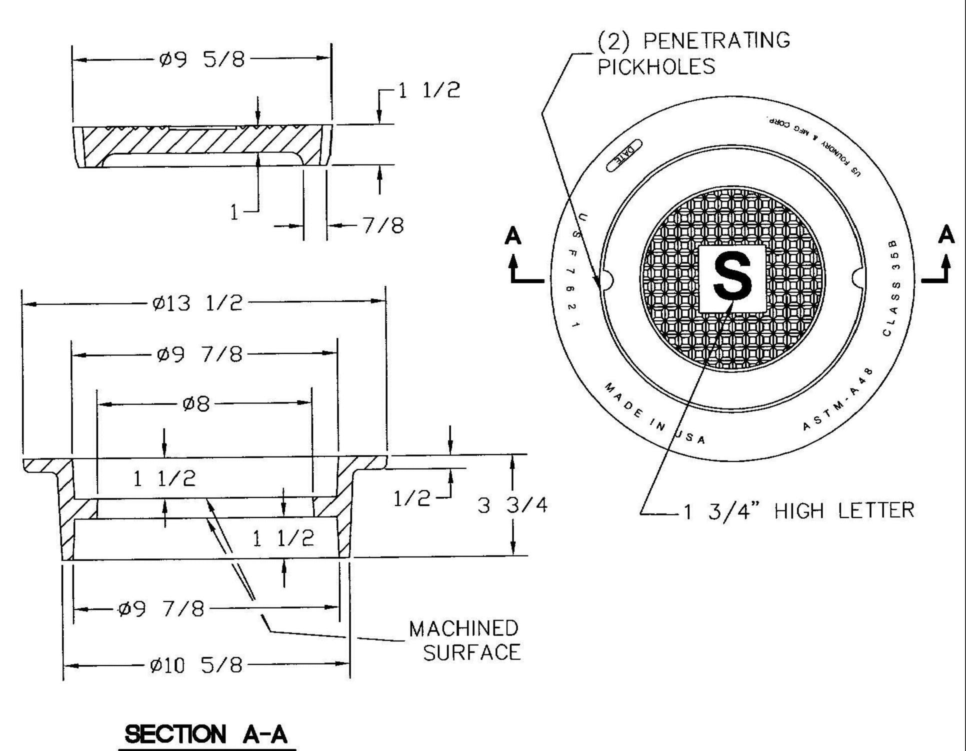

NOTE
MATERIAL: Gray Cast Iron
ASTM-A48 Class 35B

SEWER BOX AND COVER - HEAVY TRAFFIC

ENGINEERING STANDARDS 2025

REVISIONS		ENGINEERING DIVISION CITY OF POMPANO BEACH	SEWER BOX AND COVER HEAVY TRAFFIC
BY	DATE		DATE: JUNE 2022
S.S.	12/06/18		DWG. NO. 210-3
		SCALE: N.T.S.	

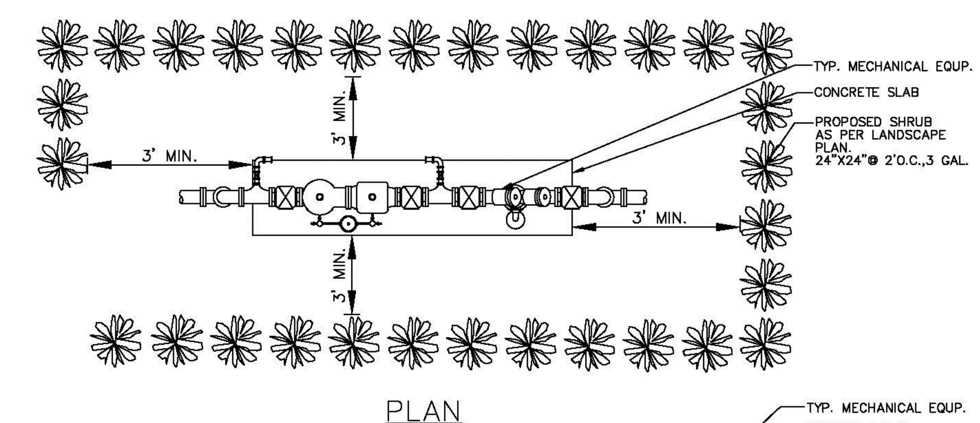

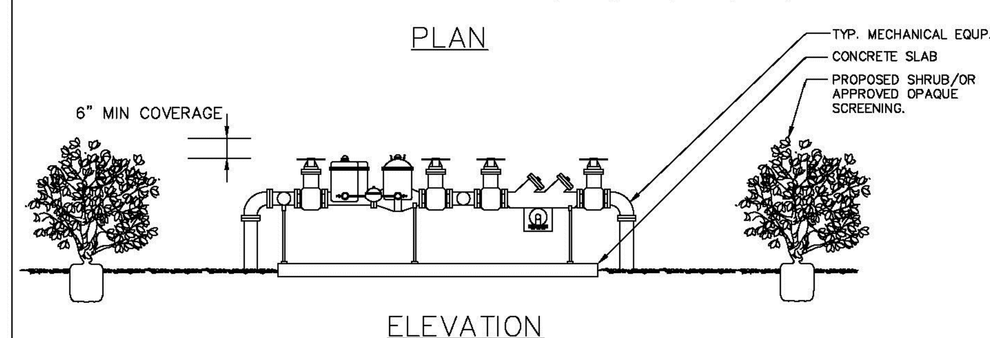

TYPICAL SCREEN FOR UTILITIES

NOTES
PLEASE NOTE THAT AS PER CITY ORDINANCE(S) 50.02(A) (4) AND 100.35(E), STREET TREES SHALL NOT BE PLACED ON TOP OF OR 5' OF EITHER SIDE OF ANY CITY OWNED UTILITY INFRASTRUCTURE. ALSO, PLEASE NOTE THAT NO TREES SHRUBBERY OR OBSTRUCTION SHALL BE PLACED WITHIN A 3' RADIUS OF A CITY OWNED LATERAL CLEANOUT OR WATER & OR REUSE METER.

ENGINEERING STANDARDS 2025

REVISIONS		ENGINEERING DIVISION CITY OF POMPANO BEACH	TYPICAL SCREEN FOR UTILITIES
BY	DATE		APPROVED BY: / DATE: MAY 2022
TCW	APRIL 2010		DWG. NO. 315-1
		SCALE: N.T.S.	

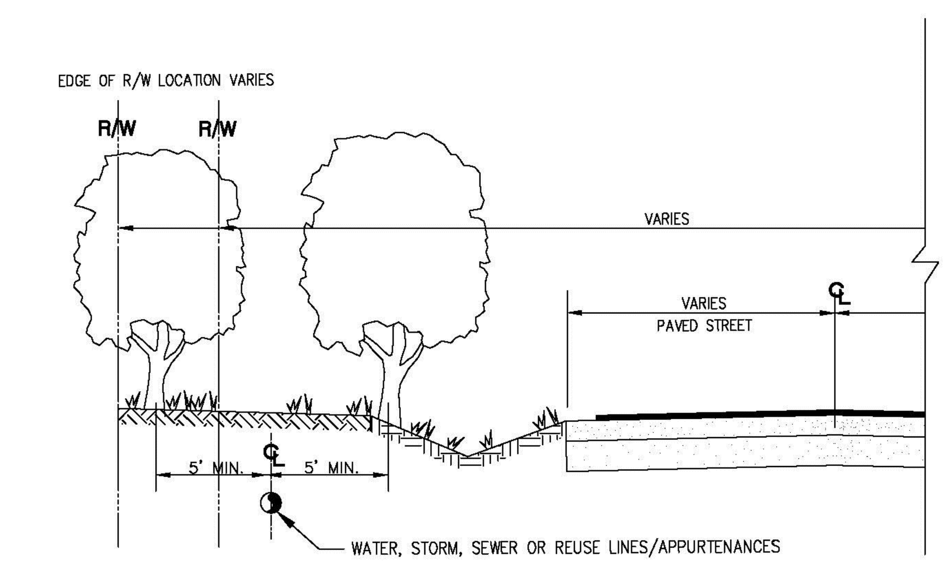

TREE LOCATIONS REQUIRED IN PUBLIC R/W ON UTILITY EASEMENTS

NOTES
PLEASE NOTE THAT AS PER CITY ORDINANCE(S) 50.02(A) (4) AND 100.35(E), STREET TREES SHALL NOT BE PLACED ON TOP OF OR 5' OF EITHER SIDE OF ANY CITY OWNED UTILITY INFRASTRUCTURE. ALSO, PLEASE NOTE THAT NO TREES SHRUBBERY OR OBSTRUCTION SHALL BE PLACED WITHIN A 3' RADIUS OF A CITY OWNED LATERAL CLEANOUT OR WATER & OR REUSE METER.

ENGINEERING STANDARDS 2025

REVISIONS		ENGINEERING DIVISION CITY OF POMPANO BEACH	REQUIRED TREE LOCATIONS
BY	DATE		APPROVED BY: / DATE: MAY 2022
			DWG. NO. 316-1
		SCALE: N.T.S.	

AAC
PZ21-12000052
4/1/25

FOR REVIEW ONLY

NO.	REVISION	DATE

FIBERBUILT UMBRELLA

2201 WEST ATLANTIC BOULEVARD, POMPANO BEACH, FL, 33069
FOR: FIBERBUILT UMBRELLA

ROSANA D. CORDOVA
LICENSE No. 41864
STATE OF FLORIDA
PROFESSIONAL ENGINEER

THIS DOCUMENT HAS BEEN DIGITALLY SIGNED AND SEALED BY ROSANA D. CORDOVA, P.E. ON THE DATE ADJACENT TO THE SEAL. PRINTED COPIES OF THIS DOCUMENT ARE NOT CONSIDERED SIGNED AND SEALED AND THE SIGNATURE MUST BE VERIFIED ON ANY ELECTRONIC COPIES.

AUTHORIZATION No. 8459
CORDOVA RODRIGUEZ & ASSOCIATES, INC.
6941 SW 196TH AVENUE, SUITE 28
PEMBROKE PINES, FLORIDA 33332
TEL: (954) 880-0180
FAX: (954) 880-0181
WWW.CRAENGINEERING.COM

WATER AND SEWER DETAILS 02

DESIGN: OG	CHECKED: RDC
SCALE: AS NOTED	
DATE: 07/30/2024	
PROJECT NO. 23.236-01	
SHT 10 OF 13	
DWG NO. C332	

PLOTTED ON 04/08/2025 1:46:38 PM
SAVED ON 1/6/2025 11:17:26 AM
A:\Projects\MIA_Projects05\W\23-236.01-Fiberbuilt-ENG\DWG\SHEETS\2323601-C331-C332-C333-WS-DTL.dwg

C332