Finance and Administration Services Department
PURCHASING DIVISION
115 S. Andrews Avenue, Room 212, Fort Lauderdale, Florida 33301 | 954-357-6066 | FAX 954-357-8535 | broward.org/Purchasing
Hours of Operation: Monday through Friday 8:30 a.m. to 5:00 p.m.

AWARD MEMORANDUM CHECKLIST

Date: February 25, 2019

Agent: Netanya Hogu NETANYA F. HOGU Digitally signed by NETANYA F. HOGU DN: dc=cty, dc=broward, dc=bc, ou=Organization, ou=BCC, ou=PU, ou=Users, cn=NETANYA F. HOGU Date: 2019.02.25 17:35:42 -05'00' CONSTANCE S. MANGAN Digitally signed by CONSTANCE S. MANGAN DN: dc=cty, dc=broward, dc=bc, ou=Organization, ou=BCC, ou=PU, ou=Users, cn=CONSTANCE S. MANGAN Date: 2019.03.01 16:58:13 -05'00'

Solicitation No. and Title: PNC2117271B1, General Roadway and Miscellaneous Construction

1. AWARD INFORMATION:

☐ Fixed ☒ Open End ☐ Split Award ☐ Multiple Award

Vendor: DP Development of Treasure Coast, LLC
Vendor Number: VS00003992
Award: $11,458,070
Master Agreement Total Three (3) Year Potential Estimated Contract Amount: $34,374,210
MA No.: PNC2117271B1_1

2. CONTRACT PERIODS:

Initial Term:	Date of Award	to	One Year from Date of Award
Renewal No.1:	One Year from Date of Award	to	Two Years from Date of Award
Renewal No.2:	Two Years from Date of Award	to	Three Years from Date of Award

3. BASIS FOR AWARD: ☒ Low ☐ Single ☐ Responsive ☐ Responsible

☒ Price Analysis/Justification:

The estimated amount for this solicitation was $12,000,000 per year. Previous contract, Contract No. C1347414B1, was utilized for price comparison. This solicitation included additional line items that were not included in the previous contract. Due diligence was performed by seeking procurements for the same or similar services. Florida Department of Transportation, Baker County and Palm Beach County were contacted to provide contracts related to these services for price a comparison. Due to the specific items solicited, comparable pricing was not found. An internet search was executed and due to the specific items solicited, other comparable pricing was not found (Exhibit 1).

4. SOLICITATION INFORMATION:

RQM No.: HWB0001003
Folder No.: 2117271
Client Agency: Highway and Bridge Maintenance Division

☒ Unclassified/Not Assigned (Open Market)
☒ Addenda: One (1)

The solicitation posted on October 25, 2018 and opened on November 30, 2018 with three (3) responses received and zero (0) declinations.

A Service of the Broward County Board of County Commissioners
Excellence in Public Procurement – Our Best. Nothing Less.

5. Office of Economic and Small Business Development (OESBD):

☒ OESBD reviewed this solicitation and determined it should be solicited to non-Sheltered Market with assigned goals.

6. ATTACHMENTS:

☒ PAR ☒ Bid Tab ☒ OESBD Memo ☒ Local Business Tax Receipt

☒ Using Agency Concurrence

☒ Exhibits

Exhibit 1 – Price Analysis
Exhibit 2 – Approved Bid Bond Surety
Exhibit 3 – Performance Evaluations

7. ADDITIONAL INFORMATION AND/OR SUMMARY:

The Office of Economic and Small Business Development (OESBD) established a County Business Enterprise (CBE) goal of thirty percent (30%) for this contract. DP Development of the Treasure Coast, LLC (DP Development) committed to thirty point two percent (30.2%) CBE participation which the OESBD reviewed and approved.

In accordance with the Broward County Workforce Investment Program, Broward County Administrative Code, Section 19.211, these services are subject to the Workforce Investment Program. DP Development has agreed to be bound to the contractual obligations of the Workforce Investment Program.

The purpose of this contract is to provide general roadway and miscellaneous construction for the Highway and Bridge Maintenance Division, which include roadway milling, resurfacing, pavement marking, miscellaneous pavement repair activities, drainage repair work, traffic control and signalization, landscaping, signing and pavement marking, guardrail, maintenance of traffic and miscellaneous maintenance activities.

This procurement carries one hundred percent (100%) performance and payment guaranty. The Purchasing Division confirmed with the surety company that DP Development has the capacity to obtain the required guaranty.

The allowances incorporated into this contract in the amount of $700,000 include: $80,000 for irrigation system; $200,000 for unforeseen conditions; $200,000 for parts and materials; $200,000 for specialized construction activities; $10,000 for permit fees for non-Broward County Agencies; $10,000 for security services. Expenditures under these allowance items must be approved by the Contract Administrator and will be reimbursed at the contractor's actual cost without mark-up.

add this to the bid notice

The apparent low bidder, DP Development, is a local business and not locally-headquartered business. The second low bidder, Weekly Asphalt Paving, Inc. submitted a bid within five percent (5%) of DP Development's bid. Therefore, to be in accordance with the Local Preference Ordinance, the Best and Final Offer (BAFO) process was extended to DP Development and Weekly Asphalt Paving, Inc. The BAFO posted on January 24, 2019 and opened on January 31, 2019. A response was received from DP Development and no response was received from Weekly Asphalt Paving, Inc.

The annual estimated amount of $11,458,070 is based upon the BAFO unit prices submitted by DP Development.

A Service of the Broward County Board of County Commissioners
Excellence in Public Procurement – Our Best. Nothing Less.

Highway and Bridge Maintenance Division reviewed the bid submitted by DP Development and concurs with the recommendation for award.

Seventeen (17) evaluations were completed for DP Development; the firm has an overall rating of 3.93 out of a possible 5.

Previous Contract Information

Contract Number: C1347414B1	Contract Title: General Roadway and Miscellaneous Construction
Incumbent Vendor: DP Development	Contract Term: December 7, 2015 to December 8, 2018
Annual Award Amount: $9,476,010	Three-Year Potential Amount: $28,428,030
Expenditures to Date: $28,328,607	

The previous contract, Contract No. C1347414B1, was awarded by the Board on December 8, 2015 (Item No. 30). The contract term started on December 8, 2015 and was due to end on December 7, 2018. The County then invoked the 90-day contract extension from December 8, 2018 to March 7, 2019, as allowed by the solicitation document.

8. APPROVE:

1. ☐ In accordance with the Broward County Procurement Code Section 21.14.d, the Director of Purchasing shall approve purchases $400,000, and under, and up to $500,000 jointly with the County Administrator.

2. ☒ In accordance with the Broward County Procurement Code Section 21.14.d, award bids up to $500,000, provided that more than one bidder has submitted a response; and award bids in **any** amount over $500,000, provided that no bidder has been determined to be nonresponsive or nonresponsible.

3. ☐ In accordance with Broward County Procurement Code Section 21.30.f.3 (b), Rejection After Bid Opening. After any vendor offer is opened, any or all offers may be rejected by the Purchasing Director or designee, includes those bids in which there is only one responsive vendor, except when a Selection Committee has been established, the responsiveness of vendor offers shall be determined as stated in Subsection 21.83.e of the Broward County Procurement Code.

4. ☐ In accordance with the Broward County Procurement Code Section 21.30.F.1(c), a minor or non-substantive lack of conformity may be considered a technicality or irregularity and may be waived by the appropriate award authority. Refer to 8. Additional Information and/or Summary (above).

5. ☐ In accordance with the Internal Control Handbook, chapter 10.G: Repairs, if a firm fixed price is not available for equipment repair, a unit must be taken to a repair shop for disassembly and determination of repair costs, and repair.

9. ALL AWARDS will be contingent upon no protests, no Board pull, receipt of bonds, and receipt of insurance as applicable.

APPROVAL AUTHORITY FOR LOW BID AWARDS

Per Requirements of 9.2

☑ APPROVE ☐ DISAPPROVE

Reason/suggested action (if disapproved):

Comments

Brenda J. Billingsley

Director of Purchasing

3/19/19

Date

A Service of the Broward County Board of County Commissioners

Excellence in Public Procurement – Our Best. Nothing Less.

Finance and Administration Services Department
PURCHASING DIVISION
115 S. Andrews Avenue, Room 212, Fort Lauderdale, Florida 33301 | 954-357-6066 | FAX 954-357-8535 | broward.org/Purchasing
Hours of Operation: Monday through Friday 8:30 a.m. to 5:00 p.m.

PURCHASING AGENT'S REPORT

DATE: August 31, 2018

TO: Brenda J. Billingsley, Director, Purchasing Division

THRU: Martha Perez-Garviso, Purchasing Manager MARTHA PEREZ-GARVISO Digitally signed by MARTHA PEREZ-GARVISO DN: dc=cty, dc=broward, dc=bc, ou=Organization, ou=BCC, ou=PU, ou=Users, cn=MARTHA PEREZ-GARVISO Date: 2018.09.10 16:24:07 -04'00'

FROM: Danea Cohen-Ebanks, Purchasing Agent, Purchasing Division Danea K. Cohen-Ebanks Digitally signed by Danea Cohen-Ebanks DN: dc=cty, dc=broward, dc=bc, ou=Organization, ou=BCC, ou=PU, ou=Users, cn=Danea Cohen-Ebanks Date: 2018.09.06 16:22:08 -04'00'

SUBJECT: Request for Approval Use of Pass-thru Line and Reduced Bonding
Bid No. PNC2117271B1, General Roadway and Miscellaneous Construction

AGENT ANALYSIS:

Highway Bridge and Maintenance Division (HBMD) is requesting approval for use of pass-thru/allowance line items and reduced bonding requirements for Bid No. PNC2117271B1, General Roadway and Miscellaneous Construction per memoranda dated June 19, 2018 (Exhibit 1 and 2).

This solicitation is for an open-end contract is to provide general roadway and miscellaneous construction services, which consists of roadway milling, resurfacing, pavement marking, miscellaneous pavement repair activities, drainage repair work, traffic control and signalization, landscaping, signing and pavement marking, guardrail, maintenance of traffic and miscellaneous maintenance activities in a competent and professional manner in compliance with all applicable building, safety, technical and related codes and laws.

The estimated annual value of the contract is $12,000,000, a three year potential estimated amount of $36,000,000.

The Office of Economic and Small Business Development established County Business Enterprise (CBE) goal of 30% for this solicitation.

1. **Pass-thru Allowance Request:**

   The total three year estimated value for below pass-thru items is $3,000,000; $1,000,000 annually which represents 8.33% of the total estimated annual contract value of $12,000,000. If approved, the solicitation will reflect the estimated pass thru amount as an allowance item. The verbiage in the solicitation will state that the allowance is an estimate only and that the Contractor will be paid at actual, verifiable costs with no mark-up, and must provide documentation to verify cost.

   A. Irrigation System Estimated Annual Amount: $80,000

   This allowance will allow the Contractor to be reimbursed for actual cost of installations or modifications to site-specific irrigation systems in compliance with municipal or county ordinances. Irrigation work is typically required for newly installed landscaping. The Contract Administrator will approve use of this line item and no mark-up shall be allowed on parts and materials at the time of request for payment.

B. Unforeseen Conditions Estimated Annual Amount: $200,000

This allowance will allow the contractor to be reimbursed for actual cost of unanticipated construction activities not specified in the contract related to soil, utility, or other conditions that are discovered after the start of construction and affect construction costs. The Contract Administrator will approve use of this line and no mark-up shall be allowed at the time of request for payment.

C. Parts and Materials Estimated Annual Amount: $200,000

This allowance will allow the Contractor to be reimbursed for actual cost of required parts and material items not specified in the contract commodity lines such as structures, equipment, traffic control devices, etc. The Contract Administrator will approve use of this line item and no mark-up shall be allowed on parts and materials at the time of request for payment.

D. Specialized Construction Activities Estimated Annual Amount: $500,000

This allowance will allow the Contractor to be reimbursed for actual cost of construction activities not specified in the contract related to earthwork, sidewalk repairs, concrete pavement repairs, etc. The Contract Administrator will approve use of this line item and no mark-up shall be allowed on parts and materials at the time of request for payment.

E. Permit Fees for non-Broward County Agencies Estimated Annual Amount: $10,000

This allowance is for non-Broward County agency permit fees. Municipalities and utilities affected by construction often charge fees for work within their jurisdiction. The amounts vary, but are generally based on the total cost of construction. The Contractor shall be required to provide proof of payment with no mark-up at the time of request for payment. The Contract Administrator will approve use of this line item.

F. Security Services Estimated Annual Amount: $10,000

This allowance will allow the Contractor to be reimbursed for actual cost of security services. The Contract Administrator will approve use of this line item and no mark-up shall be allowed on parts and materials at the time of request for payment.

2. Bonding Requirements:

HBMD requests that the requirement for a 5% bid bond and a 50% payment and performance guaranty (reduced from 100%) be included in the solicitation.

HBMD is requesting a reduction of the bonding amount from 100% of the total estimated annual contract amount of $12,000,000 to 50% ($6,000,000). HBMD estimates that the total value of all outstanding projects, upcoming projects and/or a combination of projects at any one time will not exceed the requested bond amount of $6,000,000. However, should any active work orders exceed the requested bond amount of $6,000,000, the contract terms shall state, “For any work in excess of fifty percent (50%) of the Contract amount, an additional bond shall be provided by the Contractor at the request of the Contract Administrator”. Consequently, the proposed Performance and Payment Bond will provide adequate surety to cover the County's financial interests.

In addition, historically the reduction in the payment and performance bond with the added terms of the contract, has adequately protected the County. The bond reduction has also attracted more bidders to the project which resulted in more competition and better pricing for the County.

In accordance with Numbered Memorandum 12-01 – Reduction/Waiver of Bid Bonds and/or Performance Bonds or Guarantee, for open-end construction contracts, the Director of Purchasing may approve a, performance and payment guarantee in an amount less than the total award. Accordingly, the Purchasing Agent recommends the approval to include the requirement of a 5% bid bond and 50% payment and performance guaranty. The contract will include a requirement for an increased performance and payment guarantee in the amount of 100% of current and future orders, if the spend meets the threshold of 50%.

RECOMMENDATION AND REASONS: I recommend approval of the pass-thru allowances and reduced bonding amount. .

Exhibit 1: Pass-thru Request dated June 19, 2018

Exhibit 2: Bond Reduction Request dated June 19, 2018

APPROVAL AUTHORITY

			Comments
Irrigation System	☑ APPROVE	☐ DISAPPROVE	
Unforeseen Conditions	☑ APPROVE	☐ DISAPPROVE	
Parts and Materials	☑ APPROVE	☐ DISAPPROVE	
Specialized Construction Activities	☑ APPROVE	☐ DISAPPROVE	Bond requirements in the event that any single construction project exceeds $200K.
Permit Fees	☑ APPROVE	☐ DISAPPROVE	
Security Services	☑ APPROVE	☐ DISAPPROVE	prices for security services must be compared to any contract the County has for same services to ensure fair and reasonable pricing.
Bonding Requirements	☑ APPROVE	☐ DISAPPROVE	

Reason/suggested action (if disapproved): _____

BRENDA BILLINGSLEY

Digitally signed by BRENDA BILLINGSLEY
DN: dc=cty, dc=broward, dc=bc, ou=Organization, ou=BCC, ou=PU, ou=Users, cn=BRENDA BILLINGSLEY
Date: 2018.10.01 11:23:31 -04'00'

Signature/Title

Bid #PNC2117271B1 General Roadway and Miscellaneous Construction
Lot: General Roadway

				DP Development		Weekley Ashphalt Paving		FG Construction LLC	
Item #	Item	Qty	Unit	Price	Total	Price	Total	Price	Total
PNC2117271B1--01-01	MOBILIZATION - NIGHT WORK PER PROJECT	10	each	$2,500.00	$25,000.00	$1,900.00	$19,000.00	$3,000.00	$30,000.00
PNC2117271B1--01-02	MOBILIZATION - MOBILIZE WITHIN 24 HR PER PROJECT	5	each	$500.00	$2,500.00	$1,100.00	$5,500.00	$1,000.00	$5,000.00
PNC2117271B1--01-03	MOBILIZATION - MOBILIZE WITHIN 4 HR PER PROJECT	5	each	$500.00	$2,500.00	$9,800.00	$49,000.00	$2,000.00	$10,000.00
PNC2117271B1--01-04	COMMERCIAL MATERIAL FOR TEMPORARY DRIVEWAY MAINTENANCE	10	cubic yard	$25.00	$250.00	$39.00	$390.00	$28.00	$280.00
PNC2117271B1--01-05	TRAFFIC CONTROL OFFICER	500	hour	$80.00	$40,000.00	$68.00	$34,000.00	$75.00	$37,500.00
PNC2117271B1--01-06	WORK ZONE SIGN	8000	day	$7.00	$56,000.00	$0.50	$4,000.00	$7.00	$56,000.00
PNC2117271B1--01-07	BUSINESS SIGN	5	day	$7.00	$35.00	$75.00	$375.00	$100.00	$500.00
PNC2117271B1--01-08	BARRIER WALL TEMPORARY CONCRETE UP TO 30 DAYS	500	linear foot	$25.00	$12,500.00	$33.00	$16,500.00	$30.00	$15,000.00
PNC2117271B1--01-09	BARRIER WALL TEMPORARY WATERFILLED UP TO 30 DAYS	2500	linear foot	$60.00	$150,000.00	$29.50	$73,750.00	$50.00	$125,000.00
PNC2117271B1--01-10	BARRIER WALL TEMPORARY LOW PROFILE CONCRETE UP TO 30 DAYS	50	linear foot	$10.00	$500.00	$39.00	$1,950.00	$15.00	$750.00
PNC2117271B1--01-11	BARRIER WALL TEMPORARY TYPE K UP TO 30 DAYS	50	linear foot	$10.00	$500.00	$49.00	$2,450.00	$15.00	$750.00
PNC2117271B1--01-12	BARRIER WALL TEMPORARY RELOCATE CONCRETE	2000	linear foot	$7.50	$15,000.00	$19.00	$38,000.00	$25.00	$50,000.00
PNC2117271B1--01-13	BARRIER WALL TEMPORARY RELOCATE WATERFILLED	7000	linear foot	$35.00	$245,000.00	$18.00	$126,000.00	$35.00	$245,000.00
PNC2117271B1--01-14	BARRIER WALL TEMPORARY RELOCATE LOW PROFILE CONCRETE	50	linear foot	$7.50	$375.00	$28.00	$1,400.00	$7.50	$375.00
PNC2117271B1--01-15	BARRIER WALL TEMPORARY RELOCATE TYPE K	50	linear foot	$7.50	$375.00	$28.00	$1,400.00	$7.50	$375.00
PNC2117271B1--01-16	CHANNELIZING DEVICE TYPES I II DI VP DRUM OR LCD	25000	day	$7.00	$175,000.00	$0.35	$8,750.00	$7.00	$175,000.00
PNC2117271B1--01-17	CHANNELIZING DEVICE TYPE III 6	10	day	$7.00	$70.00	$0.90	$9.00	$10.00	$100.00
PNC2117271B1--01-18	CHANNELIZING DEVICE-PEDESTRIAN LCD (LONGITUDINAL CHANNELIZING D	1500	day	$5.00	$7,500.00	$3.50	$5,250.00	$6.00	$9,000.00
PNC2117271B1--01-19	TRAFFIC CONES	15000	day	$7.00	$105,000.00	$0.10	$1,500.00	$7.00	$105,000.00
PNC2117271B1--01-20	TUBULAR MARKER	5	day	$1.00	$5.00	$3.00	$15.00	$7.00	$35.00
PNC2117271B1--01-21	ARROW BOARD / ADVANCE WARNING ARROW PANEL	500	day	$85.00	$42,500.00	$12.00	$6,000.00	$75.00	$37,500.00
PNC2117271B1--01-22	TEMPORARY RETROREFLECTIVE PAVEMENT MARKER	10	each	$5.00	$50.00	$6.00	$60.00	$5.00	$50.00
PNC2117271B1--01-23	TEMPORARY CRASH CUSHION REDIRECTIVE OPTION UP TO 30 DAYS	5	lot	$250.00	$1,250.00	$3,000.00	$15,000.00	$1,500.00	$7,500.00
PNC2117271B1--01-24	BARRICADE TYPE III -TO REMAIN 6	500	each	$25.00	$12,500.00	$2.00	$1,000.00	$200.00	$100,000.00
PNC2117271B1--01-25	PORTABLE CHANGEABLE MESSAGE SIGN TEMPORARY	200	day	$120.00	$24,000.00	$25.00	$5,000.00	$100.00	$20,000.00
PNC2117271B1--01-26	PORTABLE REGULATORY SIGN	5	day	$2.50	$12.50	$0.55	$2.75	$12.00	$60.00
PNC2117271B1--01-27	PAVEMENT MARKING REMOVABLE TAPE WHITE-BLACK SKIP	100	linear foot	$0.50	$50.00	$4.00	$400.00	$1.00	$100.00
PNC2117271B1--01-28	PAVEMENT MARKING REMOVABLE TAPE WHITE-BLACK SOLID	100	linear foot	$0.50	$50.00	$11.00	$1,100.00	$1.00	$100.00
PNC2117271B1--01-29	PAVEMENT MARKING REMOVABLE TAPE WHITE-BLACK OTHER	100	square foo	$0.50	$50.00	$4.00	$400.00	$1.00	$100.00
PNC2117271B1--01-30	PAVEMENT MARKING REMOVABLE TAPE YELLOW SOLID	100	linear foot	$0.50	$50.00	$4.00	$400.00	$1.00	$100.00
PNC2117271B1--01-31	LIGHT TOWER AMIDA / TEREX AL4000 OR EQUIVALENT	100	day	$300.00	$30,000.00	$90.00	$9,000.00	$250.00	$25,000.00
PNC2117271B1--01-32	FDOT CERTIFIED FLAG PERSON	3000	hour	$60.00	$180,000.00	$45.00	$135,000.00	$60.00	$180,000.00
PNC2117271B1--01-33	ORANGE PLASTIC MESH AND POST UP TO 30 DAYS	500	linear foot	$5.00	$2,500.00	$2.75	$1,375.00	$5.00	$2,500.00
PNC2117271B1--01-34	ARTIFICIAL COVERINGS /ROLLED EROSION CONTROL PRODUCTS	50	square yar	$6.00	$300.00	$8.00	$400.00	$10.00	$500.00
PNC2117271B1--01-35	SEDIMENT BARRIER	5000	linear foot	$3.50	$17,500.00	$1.60	$8,000.00	$4.00	$20,000.00
PNC2117271B1--01-36	FLOATING TURBIDITY BARRIER	200	linear foot	$11.00	$2,200.00	$19.00	$3,800.00	$15.00	$3,000.00
PNC2117271B1--01-37	STAKED TURBIDITY BARRIER - NYLON REINFORCED PVC	100	linear foot	$4.00	$400.00	$2.00	$200.00	$6.00	$600.00
PNC2117271B1--01-38	SOIL TRACKING PREVENTION DEVICE	5	each	$75.00	$375.00	$1,250.00	$6,250.00	$2,500.00	$12,500.00
PNC2117271B1--01-39	INLET PROTECTION SYSTEM	300	each	$300.00	$90,000.00	$115.00	$34,500.00	$300.00	$90,000.00
PNC2117271B1--01-40	LITTER REMOVAL AND DISPOSAL	5	acre	$100.00	$500.00	$100.00	$500.00	$200.00	$1,000.00
PNC2117271B1--01-41	MOWING LESS THAN 24 INCHES TALL 1 ACRES MINIMUM CHARGE	5	acre	$100.00	$500.00	$100.00	$500.00	$200.00	$1,000.00
PNC2117271B1--01-42	MOWING TALLER THAN 24 INCHES 1 ACRES MINIMUM CHARGE	5	acre	$150.00	$750.00	$170.00	$850.00	$200.00	$1,000.00
PNC2117271B1--01-43	MOWING TRIMMING EDGING WEEDING AND TRASH PICK-UP	10000	square yar	$1.00	$10,000.00	$0.15	$1,500.00	$1.00	$10,000.00
PNC2117271B1--01-44	SURVEY WORK SIGNED & SEALED DRAWINGS	150	hour	$180.00	$27,000.00	$155.00	$23,250.00	$120.00	$18,000.00
PNC2117271B1--01-45	SURVEY FIELD WORK 3-PERSON CREW	200	hour	$180.00	$36,000.00	$172.00	$34,400.00	$160.00	$32,000.00
PNC2117271B1--01-46	UTILITY LOCATING AND EXCAVATION TEST HOLE 0-4 DEPTH	5	each	$850.00	$4,250.00	$210.00	$1,050.00	$750.00	$3,750.00
PNC2117271B1--01-47	UTILITY LOCATING AND EXCAVATION TEST HOLE 4-8 DEPTH	5	each	$850.00	$4,250.00	$290.00	$1,450.00	$800.00	$4,000.00
PNC2117271B1--01-48	CURB OR CURB AND GUTTER REMOVAL	4000	linear foot	$24.00	$96,000.00	$8.00	$32,000.00	$30.00	$120,000.00
PNC2117271B1--01-49	CONCRETE SIDEWALK AND PAVEMENT REMOVAL	12000	square yar	$30.00	$360,000.00	$13.00	$156,000.00	$30.00	$360,000.00
PNC2117271B1--01-50	REMOVAL OF EXISTING CONCRETE PAVEMENT	1000	square yar	$10.00	$10,000.00	$19.00	$19,000.00	$20.00	$20,000.00
PNC2117271B1--01-51	REMOVAL AND DISPOSAL OF UNSUITABLE NON-CONTAMINATED MATERIA	150	cubic yard	$20.00	$3,000.00	$29.00	$4,350.00	$28.00	$4,200.00
PNC2117271B1--01-52	REGULAR EXCAVATION	15000	cubic yard	$25.00	$375,000.00	$25.00	$375,000.00	$30.00	$450,000.00
PNC2117271B1--01-53	LATERAL DITCH EXCAVATION	100	cubic yard	$4.00	$400.00	$40.00	$4,000.00	$30.00	$3,000.00
PNC2117271B1--01-54	SUBSOIL EXCAVATION	100	cubic yard	$8.00	$800.00	$30.00	$3,000.00	$30.00	$3,000.00
PNC2117271B1--01-55	CHANNEL EXCAVATION	50	cubic yard	$35.00	$1,750.00	$45.00	$2,250.00	$30.00	$1,500.00
PNC2117271B1--01-56	EMBANKMENT	3000	cubic yard	$23.00	$69,000.00	$36.00	$108,000.00	$25.00	$75,000.00
PNC2117271B1--01-57	GRAVEL FILL	50	cubic yard	$17.00	$850.00	$42.00	$2,100.00	$20.00	$1,000.00
PNC2117271B1--01-58	2" BROWN RIVER ROCK	20	cubic yard	$40.00	$800.00	$80.00	$1,600.00	$75.00	$1,500.00
PNC2117271B1--01-59	FLOWABLE FILL	1500	cubic yard	$215.00	$322,500.00	$130.00	$195,000.00	$200.00	$300,000.00
PNC2117271B1--01-60	FLOWABLE FINE GROUT 3000 PSI	20	cubic yard	$215.00	$4,300.00	$160.00	$3,200.00	$225.00	$4,500.00
PNC2117271B1--01-61	FILL SAND	50	cubic yard	$20.00	$1,000.00	$45.00	$2,250.00	$23.00	$1,150.00
PNC2117271B1--01-62	GEOSYNTHETIC REINFORCED SOIL SLOPE	50	square foo	$14.00	$700.00	$1.50	$75.00	$20.00	$1,000.00
PNC2117271B1--01-63	TYPE B STABILIZATION	5000	square yar	$15.00	$75,000.00	$6.00	$30,000.00	$16.00	$80,000.00
PNC2117271B1--01-64	PREPARE SOIL LAYER FINISH SOIL LAYER 6"	100	square yar	$4.00	$400.00	$5.00	$500.00	$8.00	$800.00
PNC2117271B1--01-65	PREPARED SOIL LAYER ORGANIC SOIL LAYER 6	100	square yar	$5.00	$500.00	$5.00	$500.00	$12.00	$1,200.00
PNC2117271B1--01-66	REWORKING LIMEROCK BASE 6	30	square yar	$5.00	$150.00	$14.00	$420.00	$6.00	$180.00
PNC2117271B1--01-67	REWORKING LIMEROCK BASE 4	20	square yar	$5.00	$100.00	$16.00	$320.00	$6.00	$120.00
PNC2117271B1--01-68	REWORKING LIMEROCK BASE 3	20	square yar	$5.00	$100.00	$18.00	$360.00	$6.00	$120.00
PNC2117271B1--01-69	LIMEROCK NEW MATERIAL FOR REWORKING BASE	20	cubic yard	$35.00	$700.00	$63.00	$1,260.00	$50.00	$1,000.00
PNC2117271B1--01-70	OPTIONAL BASE BASE GROUP 03	2000	square yar	$3.00	$6,000.00	$25.00	$50,000.00	$11.00	$22,000.00
PNC2117271B1--01-71	OPTIONAL BASE BASE GROUP 04	2000	square yar	$3.50	$7,000.00	$29.00	$58,000.00	$12.00	$24,000.00
PNC2117271B1--01-72	OPTIONAL BASE BASE GROUP 05	2000	square yar	$4.00	$8,000.00	$35.00	$70,000.00	$13.00	$26,000.00
PNC2117271B1--01-73	OPTIONAL BASE BASE GROUP 06	2000	square yar	$20.00	$40,000.00	$39.00	$78,000.00	$14.00	$28,000.00
PNC2117271B1--01-74	OPTIONAL BASE BASE GROUP 07	2000	square yar	$4.75	$9,500.00	$40.00	$80,000.00	$15.00	$30,000.00
PNC2117271B1--01-75	OPTIONAL BASE BASE GROUP 08	2000	square yar	$6.00	$12,000.00	$41.00	$82,000.00	$16.00	$32,000.00
PNC2117271B1--01-76	OPTIONAL BASE BASE GROUP 09	2000	square yar	$14.00	$28,000.00	$43.00	$86,000.00	$17.00	$34,000.00
PNC2117271B1--01-77	OPTIONAL BASE BASE GROUP 10	2000	square yar	$11.00	$22,000.00	$45.00	$90,000.00	$18.00	$36,000.00
PNC2117271B1--01-78	OPTIONAL BASE BASE GROUP 11	8000	square yar	$25.00	$200,000.00	$46.00	$368,000.00	$19.00	$152,000.00
PNC2117271B1--01-79	OPTIONAL BASE BASE GROUP 12	2000	square yar	$15.00	$30,000.00	$47.00	$94,000.00	$20.00	$40,000.00
PNC2117271B1--01-80	OPTIONAL BASE BASE GROUP 13	2000	square yar	$17.00	$34,000.00	$47.50	$95,000.00	$21.00	$42,000.00
PNC2117271B1--01-81	OPTIONAL BASE BASE GROUP 14	2000	square yar	$19.00	$38,000.00	$48.00	$96,000.00	$60.00	$120,000.00
PNC2117271B1--01-82	OPTIONAL BASE BASE GROUP 15	2000	square yar	$21.00	$42,000.00	$48.50	$97,000.00	$65.00	$130,000.00
PNC2117271B1--01-83	OPTIONAL BASE BASE GROUP 15 ASPHALT BASE OPTION ONLY	2000	square yar	$23.00	$46,000.00	$67.00	$134,000.00	$75.00	$150,000.00
PNC2117271B1--01-84	TURNOUT CONSTRUCTION	200	square yar	$10.00	$2,000.00	$48.00	$9,600.00	$25.00	$5,000.00
PNC2117271B1--01-85	CEMENT TREATED PERMEABLE BASE	20	cubic yard	$21.00	$420.00	$550.00	$11,000.00	$100.00	$2,000.00
PNC2117271B1--01-86	MILLING EXIST ASPH PAVT 1 AVG DEPTH AREA	12000	square yar	$4.00	$48,000.00	$2.55	$30,600.00	$7.00	$84,000.00
PNC2117271B1--01-87	MILLING EXIST ASPH PAVT 3 AVG DEPTH	1200	square yar	$5.00	$6,000.00	$3.60	$4,320.00	$7.00	$8,400.00
PNC2117271B1--01-88	MILLING EXIST ASPH PAVT 2 AVG DEPTH AREA	1000	square yar	$5.00	$5,000.00	$3.15	$3,150.00	$7.00	$7,000.00
PNC2117271B1--01-89	MILLING EXIST ASPH PAVT 1 1/2 AVG DEPTH AREA	1000	square yar	$5.00	$5,000.00	$3.15	$3,150.00	$7.00	$7,000.00
PNC2117271B1--01-90	MILLING EXIST ASPH PAVT 2 1/2 AVG DEPTH	1000	square yar	$5.00	$5,000.00	$3.25	$3,250.00	$7.00	$7,000.00
PNC2117271B1--01-91	MILLING EXIST ASPH PAVT 1/2 AVG DEPTH	500	square yar	$5.00	$2,500.00	$5.00	$2,500.00	$7.00	$3,500.00
PNC2117271B1--01-92	MILLING EXIST ASPH PAVT 3/4 AVG DEPTH	500	square yar	$5.00	$2,500.00	$5.00	$2,500.00	$7.00	$3,500.00
PNC2117271B1--01-93	TYPE S ASPHALTIC CONCRETE	50	ton	$180.00	$9,000.00	$180.00	$9,000.00	$250.00	$12,500.00
PNC2117271B1--01-94	TEMPORARY PATCH USING COLD ASPHALTIC MIX	50	cubic foot	$50.00	$2,500.00	$20.00	$1,000.00	$65.00	$3,250.00
PNC2117271B1--01-95	SUPERPAVE ASPHALTIC CONCRETE TRAFFIC A B C D OR E LESS THAN 100 TO	1500	ton	$190.00	$285,000.00	$155.00	$232,500.00	$250.00	$375,000.00
PNC2117271B1--01-96	SUPERPAVE ASPHALTIC CONCRETE TRAFFIC A B C D OR E 101 to 500 TON	1500	ton	$190.00	$285,000.00	$135.00	$202,500.00	$220.00	$330,000.00
PNC2117271B1--01-97	SUPERPAVE ASPHALTIC CONCRETE TRAFFIC A B C D OR E GREATER THAN O	1500	ton	$190.00	$285,000.00	$130.00	$195,000.00	$200.00	$300,000.00
PNC2117271B1--01-98	SUPERPAVE ASPHALTIC CONCRETE TRAFFIC B C D OR E PG76-22 PMA	50	ton	$150.00	$7,500.00	$170.00	$8,500.00	$250.00	$12,500.00
PNC2117271B1--01-99	ASPHALT CONCRETE FRICTION COURSE TRAFFIC B C OR D FC-9.5 OR 12.5 P	50	ton	$200.00	$10,000.00	$170.00	$8,500.00	$250.00	$12,500.00
PNC2117271B1--01-100	ASPHALT CONCRETE FRICTION COURSE TRAFFIC B OR C FC-9.5 OR 12.5 PG	50	ton	$250.00	$12,500.00	$170.00	$8,500.00	$250.00	$12,500.00
PNC2117271B1--01-101	MISCELLANEOUS ASPHALT PAVEMENT	100	ton	$160.00	$16,000.00	$250.00	$25,000.00	$250.00	$25,000.00
PNC2117271B1--01-102	CLEANING AND SEALING JOINTS- CONCRETE PAVEMENT	100	linear foot	$1.50	$150.00	$58.00	$5,800.00	$10.00	$1,000.00
PNC2117271B1--01-103	CLEANING AND SEALING RANDOM CRACKS-EXISTING CONCRETE PAVEMEN	100	linear foot	$3.00	$300.00	$28.00	$2,800.00	$10.00	$1,000.00
PNC2117271B1--01-104	GRINDING CONCRETE PAVEMENT	100	square yar	$3.00	$300.00	$20.00	$2,000.00	$5.00	$500.00
PNC2117271B1--01-105	CONCRETE CLASS NS GRAVITY WALL	150	cubic yard	$65.00	$9,750.00	$1,150.00	$172,500.00	$75.00	$11,250.00
PNC2117271B1--01-106	CONCRETE CLASS I ENDWALLS	100	cubic yard	$65.00	$6,500.00	$950.00	$95,000.00	$75.00	$7,500.00
PNC2117271B1--01-107	CONCRETE CLASS I RETAINING WALLS	120	cubic yard	$65.00	$7,800.00	$1,100.00	$132,000.00	$75.00	$9,000.00
PNC2117271B1--01-108	CONCRETE CLASS I MASS SUBSTRUCTURE	150	cubic yard	$65.00	$9,750.00	$1,390.00	$208,500.00	$75.00	$11,250.00
PNC2117271B1--01-109	CONCRETE CLASS I	50	cubic yard	$65.00	$3,250.00	$490.00	$24,500.00	$75.00	$3,750.00
PNC2117271B1--01-110	CONCRETE CLASS II CULVERTS	120	cubic yard	$65.00	$7,800.00	$1,300.00	$156,000.00	$75.00	$9,000.00
PNC2117271B1--01-111	CONCRETE CLASS II ENDWALLS	120	cubic yard	$65.00	$7,800.00	$1,300.00	$156,000.00	$75.00	$9,000.00
PNC2117271B1--01-112	CONCRETE CLASS II SUPERSTRUCTURE SUBSTRUCTURE BULKHEAD APPROA	110	cubic yard	$65.00	$7,150.00	$250.00	$27,500.00	$75.00	$8,250.00
PNC2117271B1--01-113	CONCRETE CLASS II RETAINING WALLS	120	cubic yard	$65.00	$7,800.00	$250.00	$30,000.00	$75.00	$9,000.00
PNC2117271B1--01-114	CONCRETE CLASS II	120	cubic yard	$65.00	$7,800.00	$250.00	$30,000.00	$75.00	$9,000.00
PNC2117271B1--01-115	CONCRETE CLASS III	120	cubic yard	$65.00	$7,800.00	$250.00	$30,000.00	$75.00	$9,000.00
PNC2117271B1--01-116	CONCRETE CLASS IV	120	cubic yard	$65.00	$7,800.00	$250.00	$30,000.00	$75.00	$9,000.00
PNC2117271B1--01-117	CONCRETE CLASS IV BULKHEAD	120	cubic yard	$65.00	$7,800.00	$250.00	$30,000.00	$75.00	$9,000.00
PNC2117271B1--01-118	CONCRETE CLASS V	120	cubic yard	$65.00	$7,800.00	$250.00	$30,000.00	$75.00	$9,000.00
PNC2117271B1--01-119	CONCRETE CLASS VI	120	cubic yard	$65.00	$7,800.00	$250.00	$30,000.00	$75.00	$9,000.00
PNC2117271B1--01-120	CONCRETE FOR JOINT REPAIRS	5	cubic yard	$65.00	$325.00	$900.00	$4,500.00	$75.00	$375.00
PNC2117271B1--01-121	EPOXY CONCRETE OVERLAY- STRUCTURES REHAB	5	square yar	$100.00	$500.00	$140.00	$700.00	$100.00	$500.00

				DP Development		Weekley Ashphalt Paving		FG Construction LLC	
Item #	Item	Qty	Unit	Price	Total	Price	Total	Price	Total
PNC2117271B1--01-122	RESTORE SPALLED AREAS EPOXY	5	cubic foot	$100.00	$500.00	$290.00	$1,450.00	$300.00	$1,500.00
PNC2117271B1--01-123	EPOXY MATERIAL FOR CRACK INJECTION- STRUCTURES REHAB	5	gallon	$150.00	$750.00	$190.00	$950.00	$150.00	$750.00
PNC2117271B1--01-124	CRACKS INJECT AND SEAL- STRUCTURES REHAB	100	linear foot	$50.00	$5,000.00	$60.00	$6,000.00	$60.00	$6,000.00
PNC2117271B1--01-125	CONCRETE SEAWALL SURFACES CLEANING (PRESSURE WASH) BELOW WAT	10	hour	$50.00	$500.00	$260.00	$2,600.00	$200.00	$2,000.00
PNC2117271B1--01-126	CONCRETE (SIDEWALK CURB GUTTER) SURFACES CLEANING (PRESSURE WA	500	square yar	$1.00	$500.00	$3.00	$1,500.00	$2.50	$1,250.00
PNC2117271B1--01-127	REINFORCING STEEL	2000	pound	$5.00	$10,000.00	$1.90	$3,800.00	$3.00	$6,000.00
PNC2117271B1--01-128	REINFORCING STEEL SUPERSTRUCTURE AND SUBSTRUCTURE	100	pound	$5.00	$500.00	$1.90	$190.00	$3.00	$300.00
PNC2117271B1--01-129	INLETS CURB TYPE 9 <10	5	each	$750.00	$3,750.00	$7,800.00	$39,000.00	$1,100.00	$5,500.00
PNC2117271B1--01-130	INLETS CURB TYPE 9 PARTIAL	5	each	$500.00	$2,500.00	$4,300.00	$21,500.00	$1,100.00	$5,500.00
PNC2117271B1--01-131	INLETS CURB TYPE 10 <10	5	each	$750.00	$3,750.00	$7,800.00	$39,000.00	$1,100.00	$5,500.00
PNC2117271B1--01-132	INLETS CURB TYPE 10 PARTIAL	5	each	$500.00	$2,500.00	$4,300.00	$21,500.00	$1,100.00	$5,500.00
PNC2117271B1--01-133	INLETS CURB TYPE P-1 <10	5	each	$750.00	$3,750.00	$7,900.00	$39,500.00	$1,100.00	$5,500.00
PNC2117271B1--01-134	INLETS CURB TYPE P-1 PARTIAL	5	each	$500.00	$2,500.00	$5,100.00	$25,500.00	$1,100.00	$5,500.00
PNC2117271B1--01-135	INLETS CURB TYPE P-2 <10	5	each	$750.00	$3,750.00	$8,200.00	$41,000.00	$1,100.00	$5,500.00
PNC2117271B1--01-136	INLETS CURB TYPE P-2 >10	5	each	$750.00	$3,750.00	$9,100.00	$45,500.00	$1,100.00	$5,500.00
PNC2117271B1--01-137	INLETS CURB TYPE P-2 PARTIAL	5	each	$500.00	$2,500.00	$5,400.00	$27,000.00	$1,100.00	$5,500.00
PNC2117271B1--01-138	INLETS CURB TYPE P-3 <10	5	each	$750.00	$3,750.00	$8,300.00	$41,500.00	$1,100.00	$5,500.00
PNC2117271B1--01-139	INLETS CURB TYPE P-3 PARTIAL	5	each	$500.00	$2,500.00	$5,800.00	$29,000.00	$1,100.00	$5,500.00
PNC2117271B1--01-140	INLETS CURB TYPE P-4 <10	5	each	$750.00	$3,750.00	$7,400.00	$37,000.00	$1,100.00	$5,500.00
PNC2117271B1--01-141	INLETS CURB TYPE P-4 PARTIAL	5	each	$500.00	$2,500.00	$5,800.00	$29,000.00	$1,100.00	$5,500.00
PNC2117271B1--01-142	INLETS CURB TYPE P-5 <10	5	each	$750.00	$3,750.00	$6,500.00	$32,500.00	$1,100.00	$5,500.00
PNC2117271B1--01-143	INLETS CURB TYPE P-5 >10	5	each	$750.00	$3,750.00	$7,000.00	$35,000.00	$1,100.00	$5,500.00
PNC2117271B1--01-144	INLETS CURB TYPE P-5 PARTIAL	5	each	$750.00	$3,750.00	$4,400.00	$22,000.00	$1,100.00	$5,500.00
PNC2117271B1--01-145	INLETS CURB TYPE P-6 <10	5	each	$750.00	$3,750.00	$7,200.00	$36,000.00	$1,100.00	$5,500.00
PNC2117271B1--01-146	INLETS CURB TYPE P-6 >10	5	each	$750.00	$3,750.00	$8,100.00	$40,500.00	$1,100.00	$5,500.00
PNC2117271B1--01-147	INLETS CURB TYPE P-6 PARTIAL	5	each	$750.00	$3,750.00	$5,300.00	$26,500.00	$1,100.00	$5,500.00
PNC2117271B1--01-148	INLETS CURB TYPE 7 <10	5	each	$750.00	$3,750.00	$7,200.00	$36,000.00	$1,100.00	$5,500.00
PNC2117271B1--01-149	INLETS CURB TYPE 7 PARTIAL	5	each	$500.00	$2,500.00	$4,200.00	$21,000.00	$1,100.00	$5,500.00
PNC2117271B1--01-150	INLETS CURB TYPE 8 <10	5	each	$750.00	$3,750.00	$7,600.00	$38,000.00	$1,100.00	$5,500.00
PNC2117271B1--01-151	INLETS CURB TYPE 8 PARTIAL	5	each	$500.00	$2,500.00	$4,200.00	$21,000.00	$1,100.00	$5,500.00
PNC2117271B1--01-152	INLETS DITCH BOTTOM TYPE A <10	5	each	$750.00	$3,750.00	$3,800.00	$19,000.00	$1,100.00	$5,500.00
PNC2117271B1--01-153	INLETS DITCH BOTTOM TYPE B <10	5	each	$750.00	$3,750.00	$4,200.00	$21,000.00	$1,100.00	$5,500.00
PNC2117271B1--01-154	INLETS DITCH BOTTOM TYPE B >10	5	each	$750.00	$3,750.00	$5,800.00	$29,000.00	$1,100.00	$5,500.00
PNC2117271B1--01-155	INLETS DITCH BOTTOM TYPE B J BOT <10	5	each	$750.00	$3,750.00	$6,400.00	$32,000.00	$1,100.00	$5,500.00
PNC2117271B1--01-156	INLETS DITCH BOTTOM TYPE B PARTIAL	5	each	$500.00	$2,500.00	$3,900.00	$19,500.00	$1,100.00	$5,500.00
PNC2117271B1--01-157	INLETS DITCH BOTTOM TYPE C <10	5	each	$750.00	$3,750.00	$3,850.00	$19,250.00	$1,100.00	$5,500.00
PNC2117271B1--01-158	INLETS DITCH BOTTOM TYPE C >10	5	each	$750.00	$3,750.00	$4,100.00	$20,500.00	$1,100.00	$5,500.00
PNC2117271B1--01-159	INLETS DITCH BOTTOM TYPE C PARTIAL	5	each	$500.00	$2,500.00	$2,800.00	$14,000.00	$1,100.00	$5,500.00
PNC2117271B1--01-160	INLETS DITCH BOTTOM TYPE C MODIFIED- BACK OF SIDEWALK <10	5	each	$750.00	$3,750.00	$3,300.00	$16,500.00	$1,100.00	$5,500.00
PNC2117271B1--01-161	INLETS DITCH BOTTOM TYPE D <10	5	each	$750.00	$3,750.00	$5,100.00	$25,500.00	$1,100.00	$5,500.00
PNC2117271B1--01-162	INLETS DITCH BOTTOM TYPE E <10	5	each	$750.00	$3,750.00	$5,000.00	$25,000.00	$1,100.00	$5,500.00
PNC2117271B1--01-163	INLETS DITCH BOTTOM TYPE H <10	5	each	$750.00	$3,750.00	$6,300.00	$31,500.00	$1,100.00	$5,500.00
PNC2117271B1--01-164	INLETS GUTTER TYPE S <10	5	each	$750.00	$3,750.00	$6,300.00	$31,500.00	$1,100.00	$5,500.00
PNC2117271B1--01-165	INLETS GUTTER TYPE S J BOTTOM <10	5	each	$750.00	$3,750.00	$5,400.00	$27,000.00	$1,100.00	$5,500.00
PNC2117271B1--01-166	INLETS GUTTER TYPE S PARTIAL	5	each	$750.00	$3,750.00	$3,200.00	$16,000.00	$1,100.00	$5,500.00
PNC2117271B1--01-167	INLETS GUTTER TYPE V <10	5	each	$750.00	$3,750.00	$4,900.00	$24,500.00	$1,100.00	$5,500.00
PNC2117271B1--01-168	INLETS GUTTER TYPE V PARTIAL	5	each	$750.00	$3,750.00	$3,200.00	$16,000.00	$1,100.00	$5,500.00
PNC2117271B1--01-169	INLETS MEDIAN BARRIER TYPE 2 J BOTTOM <10	5	each	$750.00	$3,750.00	$6,900.00	$34,500.00	$1,100.00	$5,500.00
PNC2117271B1--01-170	INLETS MEDIAN BARRIER TYPE 3 J BOTTOM <10	5	each	$750.00	$3,750.00	$6,900.00	$34,500.00	$1,100.00	$5,500.00
PNC2117271B1--01-171	INLETS SPECIAL <10	5	each	$500.00	$2,500.00	$5,400.00	$27,000.00	$1,100.00	$5,500.00
PNC2117271B1--01-172	INLETS CLOSED FLUME	5	each	$750.00	$3,750.00	$4,200.00	$21,000.00	$1,100.00	$5,500.00
PNC2117271B1--01-173	MANHOLES P-7 <10	5	each	$750.00	$3,750.00	$5,900.00	$29,500.00	$1,100.00	$5,500.00
PNC2117271B1--01-174	MANHOLES P-7 PARTIAL	5	each	$100.00	$500.00	$3,200.00	$16,000.00	$1,100.00	$5,500.00
PNC2117271B1--01-175	MANHOLES P-8 <10	5	each	$750.00	$3,750.00	$6,200.00	$31,000.00	$1,100.00	$5,500.00
PNC2117271B1--01-176	MANHOLES P-8 PARTIAL	5	each	$500.00	$2,500.00	$3,400.00	$17,000.00	$1,100.00	$5,500.00
PNC2117271B1--01-177	MANHOLES J-7 <10	5	each	$750.00	$3,750.00	$6,400.00	$32,000.00	$1,100.00	$5,500.00
PNC2117271B1--01-178	MANHOLES J-7 PARTIAL	5	each	$500.00	$2,500.00	$3,900.00	$19,500.00	$1,100.00	$5,500.00
PNC2117271B1--01-179	MANHOLES REPAIR	5	each	$750.00	$3,750.00	$1,900.00	$9,500.00	$1,100.00	$5,500.00
PNC2117271B1--01-180	JUNCTION BOX DRAINAGE P-7 <10	5	each	$750.00	$3,750.00	$6,100.00	$30,500.00	$1,100.00	$5,500.00
PNC2117271B1--01-181	JUNCTION BOX DRAINAGE P-7 PARTIAL	5	each	$500.00	$2,500.00	$3,900.00	$19,500.00	$1,100.00	$5,500.00
PNC2117271B1--01-182	JUNCTION BOXES J-7 <10	5	each	$750.00	$3,750.00	$6,000.00	$30,000.00	$1,100.00	$5,500.00
PNC2117271B1--01-183	JUNCTION BOXES DRAINAGE J-7 PARTIAL	5	each	$500.00	$2,500.00	$3,800.00	$19,000.00	$1,100.00	$5,500.00
PNC2117271B1--01-184	INLETS ADJUST	5	each	$2,500.00	$12,500.00	$3,000.00	$15,000.00	$1,500.00	$7,500.00
PNC2117271B1--01-185	MANHOLE ADJUST	10	each	$2,600.00	$26,000.00	$660.00	$6,600.00	$1,500.00	$15,000.00
PNC2117271B1--01-186	MANHOLE ADJUST UTILITIES	5	each	$2,000.00	$10,000.00	$750.00	$3,750.00	$1,500.00	$7,500.00
PNC2117271B1--01-187	VALVE BOXES ADJUST	50	each	$1,250.00	$62,500.00	$425.00	$21,250.00	$1,500.00	$75,000.00
PNC2117271B1--01-188	DRAINAGE STRUCTURES MISCELLANEOUS ADJUST	5	each	$1,700.00	$8,500.00	$1,900.00	$9,500.00	$1,500.00	$7,500.00
PNC2117271B1--01-189	YARD DRAIN	5	each	$200.00	$1,000.00	$1,400.00	$7,000.00	$1,000.00	$5,000.00
PNC2117271B1--01-190	DRAINAGE STRUCTURE MODIFY	50	each	$2,000.00	$100,000.00	$4,300.00	$215,000.00	$1,000.00	$50,000.00
PNC2117271B1--01-191	INLETS RELOCATING	5	each	$200.00	$1,000.00	$3,900.00	$19,500.00	$1,000.00	$5,000.00
PNC2117271B1--01-192	MANHOLES AND INLETS CLEANING AND SEALING <10	50	each	$1,900.00	$95,000.00	$1,000.00	$50,000.00	$1,000.00	$50,000.00
PNC2117271B1--01-193	MANHOLES AND INLETS CLEANING AND SEALING >10	5	each	$1,900.00	$9,500.00	$1,250.00	$6,250.00	$1,000.00	$5,000.00
PNC2117271B1--01-194	REPLACE GRATE	10	each	$2,600.00	$26,000.00	$1,500.00	$15,000.00	$2,000.00	$20,000.00
PNC2117271B1--01-195	REPLACEMENT OF AIRCRAFT RATED CATCH BASIN TOP	5	each	$5,000.00	$25,000.00	$3,300.00	$16,500.00	$7,500.00	$37,500.00
PNC2117271B1--01-196	PIPE CULVERT OPTIONAL MATERIAL ROUND 12 15 18 24 GUTTER DRAIN	50	linear foot	$20.00	$1,000.00	$78.00	$3,900.00	$200.00	$10,000.00
PNC2117271B1--01-197	PIPE CULVERT RCP MATERIAL ONLY ROUND 12 15 18 24 GUTTER DRAIN	50	linear foot	$30.00	$1,500.00	$78.00	$3,900.00	$200.00	$10,000.00
PNC2117271B1--01-198	PIPE CULVERT OPTIONAL MATERIAL ROUND 3036 GUTTER DRAIN	50	linear foot	$45.00	$2,250.00	$120.00	$6,000.00	$200.00	$10,000.00
PNC2117271B1--01-199	PIPE CULVERT RCP MATERIAL ONLY ROUND 3036 GUTTER DRAIN	50	linear foot	$50.00	$2,500.00	$140.00	$7,000.00	$200.00	$10,000.00
PNC2117271B1--01-200	PIPE CULVERT OPTIONAL MATERIAL ROUND 4248 GUTTER DRAIN	50	linear foot	$75.00	$3,750.00	$165.00	$8,250.00	$200.00	$10,000.00
PNC2117271B1--01-201	PIPE CULVERT RCP MATERIAL ONLY ROUND 4248 GUTTER DRAIN	50	linear foot	$80.00	$4,000.00	$185.00	$9,250.00	$200.00	$10,000.00
PNC2117271B1--01-202	PIPE CULVERT OPTIONAL MATERIAL ROUND 12 15 18 24 SD	50	linear foot	$135.00	$6,750.00	$90.00	$4,500.00	$200.00	$10,000.00
PNC2117271B1--01-203	PIPE CULVERT RCP MATERIAL ONLY ROUND 12 15 18 24 SD	2000	linear foot	$170.00	$340,000.00	$88.00	$176,000.00	$200.00	$400,000.00
PNC2117271B1--01-204	PIPE CULVERT OPTIONAL MATERIAL ROUND 3036 SD	200	linear foot	$120.00	$24,000.00	$138.00	$27,600.00	$150.00	$30,000.00
PNC2117271B1--01-205	PIPE CULVERT RCP MATERIAL ONLY ROUND 3036 SD	20	linear foot	$200.00	$4,000.00	$168.00	$3,360.00	$200.00	$4,000.00
PNC2117271B1--01-206	PIPE CULVERT OPTIONAL MATERIAL ROUND 4248 SD	10	linear foot	$145.00	$1,450.00	$185.00	$1,850.00	$200.00	$2,000.00
PNC2117271B1--01-207	PIPE CULVERT RCP MATERIAL ONLY ROUND 4248 SD	20	linear foot	$235.00	$4,700.00	$185.00	$3,700.00	$200.00	$4,000.00
PNC2117271B1--01-208	PIPE CULVERT OPTIONAL MATERIAL ROUND 5460 SD	20	linear foot	$160.00	$3,200.00	$240.00	$4,800.00	$200.00	$4,000.00
PNC2117271B1--01-209	PIPE CULVERT RCP MATERIAL ONLY ROUND 5460 SD	20	linear foot	$245.00	$4,900.00	$255.00	$5,100.00	$200.00	$4,000.00
PNC2117271B1--01-210	PIPE CULVERT OPTIONAL MATERIAL OTHER SHAPE - ELLIP/ARCH 15 18 SD	20	linear foot	$10.00	$200.00	$128.00	$2,560.00	$200.00	$4,000.00
PNC2117271B1--01-211	PIPE CULVERT RCP MATERIAL ONLY OTHER SHAPE - ELLIP/ARCH 15 18 SD	100	linear foot	$100.00	$10,000.00	$128.00	$12,800.00	$200.00	$20,000.00
PNC2117271B1--01-212	PIPE CULVERT OPTIONAL MATERIAL OTHER SHAPE - ELLIP/ARCH 24 SD	100	linear foot	$20.00	$2,000.00	$140.00	$14,000.00	$200.00	$20,000.00
PNC2117271B1--01-213	PIPE CULVERT RCP MATERIAL ONLY OTHER SHAPE - ELLIP/ARCH 24 SD	50	linear foot	$115.00	$5,750.00	$140.00	$7,000.00	$200.00	$10,000.00
PNC2117271B1--01-214	PIPE CULVERT OPTIONAL MATERIAL OTHER SHAPE - ELLIP/ARCH 30 36 SD	50	linear foot	$40.00	$2,000.00	$160.00	$8,000.00	$200.00	$10,000.00
PNC2117271B1--01-215	PIPE CULVERT RCP MATERIAL ONLY OTHER SHAPE - ELLIP/ARCH 30 36 SD	50	linear foot	$75.00	$3,750.00	$175.00	$8,750.00	$200.00	$10,000.00
PNC2117271B1--01-216	PIPE CULVERT OPTIONAL MATERIAL ROUND 15 18 24 S/CD	50	linear foot	$100.00	$5,000.00	$115.00	$5,750.00	$200.00	$10,000.00
PNC2117271B1--01-217	PIPE CULVERT RCP CLASS IV ONLY 15 18 24 S/CD	20	linear foot	$180.00	$3,600.00	$135.00	$2,700.00	$200.00	$4,000.00
PNC2117271B1--01-218	PIPE CULVERT OPT MATERIAL ROUND 30S/CD	20	linear foot	$85.00	$1,700.00	$180.00	$3,600.00	$200.00	$4,000.00
PNC2117271B1--01-219	PIPE CULVERT RCP CLASS IV ONLY 30S/CD	20	linear foot	$175.00	$3,500.00	$180.00	$3,600.00	$200.00	$4,000.00
PNC2117271B1--01-220	PIPE CULVERT OPT MATERIAL ROUND 36S/CD	20	linear foot	$175.00	$3,500.00	$220.00	$4,400.00	$200.00	$4,000.00
PNC2117271B1--01-221	PIPE CULVERT RCP CLASS IV ONLY 36S/CD	20	linear foot	$160.00	$3,200.00	$310.00	$6,200.00	$200.00	$4,000.00
PNC2117271B1--01-222	CLEANING & SEALING EXISTING PIPE JOINT 15 18 24 STORM SEWER	10	each	$2,200.00	$22,000.00	$345.00	$3,450.00	$3,000.00	$30,000.00
PNC2117271B1--01-223	CLEANING & SEALING EXISTING PIPE JOINT 30 36 STORM SEWER	2	each	$2,250.00	$4,500.00	$460.00	$920.00	$3,500.00	$7,000.00
PNC2117271B1--01-224	CLEANING & SEALING EXISTING PIPE JOINT 42 48 STORM SEWER	2	each	$2,265.00	$4,530.00	$575.00	$1,150.00	$4,000.00	$8,000.00
PNC2117271B1--01-225	CLEANING & SEALING EXISTING PIPE JOINT 54 60 STORM SEWER	2	each	$2,280.00	$4,560.00	$1,150.00	$2,300.00	$4,500.00	$9,000.00
PNC2117271B1--01-226	CLEANING & SEALING EXISTING PIPE JOINT >60 STORM SEWER	2	each	$2,295.00	$4,590.00	$1,150.00	$2,300.00	$5,000.00	$10,000.00
PNC2117271B1--01-227	CLEANING & SEALING EXISTING PIPE JOINT 15 18 24 CROSS DRAIN	2	each	$1,500.00	$3,000.00	$345.00	$690.00	$3,000.00	$6,000.00
PNC2117271B1--01-228	CLEANING & SEALING EXISTING PIPE JOINT 30 36 CROSS DRAIN	2	each	$1,550.00	$3,100.00	$460.00	$920.00	$3,500.00	$7,000.00
PNC2117271B1--01-229	CLEANING & SEALING EXISTING PIPE JOINT 42 48 CROSS DRAIN	2	each	$1,575.00	$3,150.00	$575.00	$1,150.00	$4,000.00	$8,000.00
PNC2117271B1--01-230	CLEANING & SEALING EXISTING PIPE JOINT 5460 CROSS DRAIN	2	each	$1,600.00	$3,200.00	$1,150.00	$2,300.00	$4,500.00	$9,000.00
PNC2117271B1--01-231	CLEANING & SEALING EXISTING PIPE JOINT >60 CROSS DRAIN	2	each	$1,625.00	$3,250.00	$1,150.00	$2,300.00	$5,000.00	$10,000.00
PNC2117271B1--01-232	PIPE FILLING AND PLUGGING- PLACE OUT OF SERVICE	30	cubic yard	$500.00	$15,000.00	$245.00	$7,350.00	$500.00	$15,000.00
PNC2117271B1--01-233	DESILTING CONCRETE BOX CULVERT	5	cubic yard	$500.00	$2,500.00	$350.00	$1,750.00	$500.00	$2,500.00
PNC2117271B1--01-234	PVC PIPE FOR BACK OF SIDEWALK 4	100	linear foot	$5.00	$500.00	$19.00	$1,900.00	$20.00	$2,000.00
PNC2117271B1--01-235	PVC PIPE FOR BACK OF SIDEWALK NON-STANDARD DIAMETER	100	linear foot	$5.00	$500.00	$35.00	$3,500.00	$20.00	$2,000.00
PNC2117271B1--01-236	MITERED END SECTION OPTIONAL ROUND 12 1518 CD	5	each	$360.00	$1,800.00	$1,200.00	$6,000.00	$1,500.00	$7,500.00
PNC2117271B1--01-237	MITERED END SECTION OPTIONAL ROUND 24 CD	5	each	$375.00	$1,875.00	$1,900.00	$9,500.00	$1,700.00	$8,500.00
PNC2117271B1--01-238	MITERED END SECTION OPTIONAL ROUND 3036 CD	5	each	$400.00	$2,000.00	$2,950.00	$14,750.00	$1,900.00	$9,500.00
PNC2117271B1--01-239	MITERED END SECTION OPTIONAL ROUND 42 48 CD	5	each	$500.00	$2,500.00	$5,300.00	$26,500.00	$2,100.00	$10,500.00
PNC2117271B1--01-240	PIPE LINER OPTIONAL MATERIAL 0-24	1500	linear foot	$250.00	$375,000.00	$140.00	$210,000.00	$300.00	$450,000.00
PNC2117271B1--01-241	PIPE LINER OPTIONAL MATERIAL 25-36	500	linear foot	$300.00	$150,000.00	$180.00	$90,000.00	$500.00	$250,000.00
PNC2117271B1--01-242	PIPE LINER OPTIONAL MATERIAL 37-48	20	linear foot	$700.00	$14,000.00	$280.00	$5,600.00	$700.00	$14,000.00
PNC2117271B1--01-243	STORM SEWER INSPECTION (VIDEO CAMERA)	100	linear foot	$20.00	$2,000.00	$5.00	$500.00	$10.00	$1,000.00
PNC2117271B1--01-244	TRENCH DRAIN STANDARD	100	linear foot	$25.00	$2,500.00	$100.00	$10,000.00	$100.00	$10,000.00
PNC2117271B1--01-245	TRENCH DRAIN CLEANING	100	linear foot	$100.00	$10,000.00	$10.00	$1,000.00	$100.00	$10,000.00
PNC2117271B1--01-246	UNDERDRAIN TYPE II	100	linear foot	$15.00	$1,500.00	$40.00	$4,000.00	$30.00	$3,000.00

				DP Development		Weekley Ashphalt Paving		FG Construction LLC	
Item #	Item	Qty	Unit	Price	Total	Price	Total	Price	Total
PNC2117271B1--01-247	FRENCH DRAIN 18	200	linear foot	$265.00	$53,000.00	$160.00	$32,000.00	$250.00	$50,000.00
PNC2117271B1--01-248	FRENCH DRAIN 24	50	linear foot	$275.00	$13,750.00	$240.00	$12,000.00	$275.00	$13,750.00
PNC2117271B1--01-249	FRENCH DRAIN 30	50	linear foot	$275.00	$13,750.00	$260.00	$13,000.00	$300.00	$15,000.00
PNC2117271B1--01-250	FRENCH DRAIN 36	2000	linear foot	$150.00	$300,000.00	$195.00	$390,000.00	$325.00	$650,000.00
PNC2117271B1--01-251	BALLAST ROCK FRENCH DRAIN AGGREGATE	20	cubic yard	$75.00	$1,500.00	$48.00	$960.00	$80.00	$1,600.00
PNC2117271B1--01-252	SHEET PILING STEEL TEMPORARY-CRITICAL	100	square foo	$25.00	$2,500.00	$49.00	$4,900.00	$40.00	$4,000.00
PNC2117271B1--01-253	STORM DRAINAGE DESILTING VIDEO & FINISHED CD OR DVD 0-24 PIPE	7000	linear foot	$15.00	$105,000.00	$7.00	$49,000.00	$20.00	$140,000.00
PNC2117271B1--01-254	STORM DRAINAGE DESILTING VIDEO & FINISHED CD OR DVD 25-36 PIPE	1000	linear foot	$26.00	$26,000.00	$7.50	$7,500.00	$25.00	$25,000.00
PNC2117271B1--01-255	STORM DRAINAGE DESILTING VIDEO & FINISHED CD OR DVD 37-48 PIPE	100	linear foot	$40.00	$4,000.00	$8.00	$800.00	$30.00	$3,000.00
PNC2117271B1--01-256	STORM DRAINAGE DESILTING VIDEO & FINISHED CD OR DVD 49-60 PIPE	100	linear foot	$50.00	$5,000.00	$12.00	$1,200.00	$50.00	$5,000.00
PNC2117271B1--01-257	STORM DRAINAGE DESILTING VIDEO & FINISHED CD OR DVD 61 OR GRATE	100	linear foot	$75.00	$7,500.00	$24.00	$2,400.00	$65.00	$6,500.00
PNC2117271B1--01-258	VIDEO STORM DRAINAGE & FINISH CD 4 HR MINIMUM CHARGE	10	hour	$310.00	$3,100.00	$230.00	$2,300.00	$280.00	$2,800.00
PNC2117271B1--01-259	WELL POINT SYSTEM COMPLETE 4 PUMP	5	day	$300.00	$1,500.00	$200.00	$1,000.00	$350.00	$1,750.00
PNC2117271B1--01-260	WELL POINT SYSTEM COMPLETE 6 PUMP	5	day	$400.00	$2,000.00	$220.00	$1,100.00	$550.00	$2,750.00
PNC2117271B1--01-261	WELL POINT SYSTEM COMPLETE 8 PUMP	100	day	$800.00	$80,000.00	$230.00	$23,000.00	$750.00	$75,000.00
PNC2117271B1--01-262	LASER PROFILE STORM DRAINAGE WITH DVD VIDEO & REPORT	100	linear foot	$5.00	$500.00	$8.00	$800.00	$10.00	$1,000.00
PNC2117271B1--01-263	PIPE/CULVERT DIVING INSPECTION 3-PERSON CREW 4 HR MINIMUM CHAR	10	hour	$900.00	$9,000.00	$900.00	$9,000.00	$600.00	$6,000.00
PNC2117271B1--01-264	BY-PASS PUMP 4	30	day	$750.00	$22,500.00	$200.00	$6,000.00	$800.00	$24,000.00
PNC2117271B1--01-265	BY-PASS PUMP 6	20	day	$850.00	$17,000.00	$250.00	$5,000.00	$1,000.00	$20,000.00
PNC2117271B1--01-266	BY-PASS PUMP 8	5	day	$900.00	$4,500.00	$300.00	$1,500.00	$1,200.00	$6,000.00
PNC2117271B1--01-267	12 PLUG FOR BLOCKING DRAINAGE LINE WITHIN WATERTABLE - INCLUDES	5	each	$200.00	$1,000.00	$500.00	$2,500.00	$300.00	$1,500.00
PNC2117271B1--01-268	15 PLUG FOR BLOCKING DRAINAGE LINE WITHIN WATERTABLE - INCLUDES	5	each	$250.00	$1,250.00	$600.00	$3,000.00	$400.00	$2,000.00
PNC2117271B1--01-269	18 PLUG FOR BLOCKING DRAINAGE LINE WITHIN WATERTABLE - INCLUDES	5	each	$300.00	$1,500.00	$700.00	$3,500.00	$500.00	$2,500.00
PNC2117271B1--01-270	24 PLUG FOR BLOCKING DRAINAGE LINE WITHIN WATERTABLE - INCLUDES	5	each	$350.00	$1,750.00	$850.00	$4,250.00	$600.00	$3,000.00
PNC2117271B1--01-271	30 PLUG FOR BLOCKING DRAINAGE LINE WITHIN WATERTABLE - INCLUDES	5	each	$570.00	$2,850.00	$1,200.00	$6,000.00	$700.00	$3,500.00
PNC2117271B1--01-272	36 PLUG FOR BLOCKING DRAINAGE LINE WITHIN WATERTABLE - INCLUDES	5	each	$580.00	$2,900.00	$1,400.00	$7,000.00	$800.00	$4,000.00
PNC2117271B1--01-273	42 PLUG FOR BLOCKING DRAINAGE LINE WITHIN WATERTABLE - INCLUDES	5	each	$600.00	$3,000.00	$1,600.00	$8,000.00	$900.00	$4,500.00
PNC2117271B1--01-274	48 PLUG FOR BLOCKING DRAINAGE LINE WITHIN WATERTABLE - INCLUDES	5	each	$700.00	$3,500.00	$1,700.00	$8,500.00	$1,000.00	$5,000.00
PNC2117271B1--01-275	54 PLUG FOR BLOCKING DRAINAGE LINE WITHIN WATERTABLE - INCLUDES	5	each	$800.00	$4,000.00	$1,900.00	$9,500.00	$1,100.00	$5,500.00
PNC2117271B1--01-276	60 PLUG FOR BLOCKING DRAINAGE LINE WITHIN WATERTABLE - INCLUDES	5	each	$900.00	$4,500.00	$2,200.00	$11,000.00	$1,200.00	$6,000.00
PNC2117271B1--01-277	66 PLUG FOR BLOCKING DRAINAGE LINE WITHIN WATERTABLE - INCLUDES	5	each	$1,050.00	$5,250.00	$2,300.00	$11,500.00	$1,300.00	$6,500.00
PNC2117271B1--01-278	72 PLUG FOR BLOCKING DRAINAGE LINE WITHIN WATERTABLE - INCLUDES	5	each	$1,150.00	$5,750.00	$2,400.00	$12,000.00	$1,400.00	$7,000.00
PNC2117271B1--01-279	78 PLUG FOR BLOCKING DRAINAGE LINE WITHIN WATERTABLE - INCLUDES	5	each	$1,250.00	$6,250.00	$2,500.00	$12,500.00	$1,500.00	$7,500.00
PNC2117271B1--01-280	84 PLUG FOR BLOCKING DRAINAGE LINE WITHIN WATERTABLE - INCLUDES	5	each	$1,300.00	$6,500.00	$3,300.00	$16,500.00	$1,600.00	$8,000.00
PNC2117271B1--01-281	STEEL ROAD PLATE UP TO 30 DAYS F&I	1000	square foo	$30.00	$30,000.00	$6.50	$6,500.00	$25.00	$25,000.00
PNC2117271B1--01-282	MINOR INLET-TOP REPAIR (NO REINFORCEMENT REPAIR)	5	each	$750.00	$3,750.00	$1,200.00	$6,000.00	$750.00	$3,750.00
PNC2117271B1--01-283	MAJOR INLET-TOP REPAIR (REINFORCEMENT REPAIR)	5	each	$800.00	$4,000.00	$1,600.00	$8,000.00	$900.00	$4,500.00
PNC2117271B1--01-284	PLASTIC FILTER FABRIC SUBSURFACE	5000	square yar	$5.00	$25,000.00	$4.00	$20,000.00	$20.00	$100,000.00
PNC2117271B1--01-285	PIPE HANDRAIL- GUIDERAIL STEEL	10	linear foot	$65.00	$650.00	$59.00	$590.00	$100.00	$1,000.00
PNC2117271B1--01-286	PIPE HANDRAIL- GUIDERAIL ALUMINUM	50	linear foot	$85.00	$4,250.00	$54.00	$2,700.00	$120.00	$6,000.00
PNC2117271B1--01-287	PEDESTRIAN / BICYCLE RAILING STEEL 42 TYPE 1	10	linear foot	$125.00	$1,250.00	$124.00	$1,240.00	$120.00	$1,200.00
PNC2117271B1--01-288	PEDESTRIAN / BICYCLE RAILING STEEL ONLY 54 TYPE 1	10	linear foot	$125.00	$1,250.00	$145.00	$1,450.00	$150.00	$1,500.00
PNC2117271B1--01-289	PEDESTRIAN / BICYCLE RAILING ALUMINUM ONLY 42 TYPE 1	50	linear foot	$125.00	$6,250.00	$98.00	$4,900.00	$150.00	$7,500.00
PNC2117271B1--01-290	PEDESTRIAN / BICYCLE RAILING ALUMINUM ONLY 54 TYPE 1	50	linear foot	$125.00	$6,250.00	$115.00	$5,750.00	$175.00	$8,750.00
PNC2117271B1--01-291	ALUMINUM BULLET RAILINGS SINGLE RAIL	50	linear foot	$60.00	$3,000.00	$55.00	$2,750.00	$50.00	$2,500.00
PNC2117271B1--01-292	ALUMINUM BULLET RAILINGS DOUBLE RAIL	50	linear foot	$90.00	$4,500.00	$70.00	$3,500.00	$60.00	$3,000.00
PNC2117271B1--01-293	BULLET RAIL RELOCATE- DOUBLE RAIL	50	linear foot	$30.00	$1,500.00	$39.00	$1,950.00	$30.00	$1,500.00
PNC2117271B1--01-294	CONCRETE CURB & GUTTER TYPE E	100	linear foot	$15.00	$1,500.00	$39.00	$3,900.00	$30.00	$3,000.00
PNC2117271B1--01-295	CONCRETE CURB & GUTTER TYPE F	5000	linear foot	$45.00	$225,000.00	$29.00	$145,000.00	$40.00	$200,000.00
PNC2117271B1--01-296	CONCRETE CURB TYPE D	1000	linear foot	$30.00	$30,000.00	$29.00	$29,000.00	$35.00	$35,000.00
PNC2117271B1--01-297	VALLEY GUTTER- CONCRETE	4000	linear foot	$40.00	$160,000.00	$31.00	$124,000.00	$40.00	$160,000.00
PNC2117271B1--01-298	TRAFFIC SEPARATOR CONCRETE - TYPE IV 4 WIDE	20	linear foot	$140.00	$2,800.00	$48.00	$960.00	$100.00	$2,000.00
PNC2117271B1--01-299	SHOULDER GUTTER- CONCRETE	100	linear foot	$10.00	$1,000.00	$41.00	$4,100.00	$30.00	$3,000.00
PNC2117271B1--01-300	CONCRETE TRAFFIC SEPARATOR SPECIAL-VARIABLE WIDTH	200	square yar	$15.00	$3,000.00	$55.00	$11,000.00	$100.00	$20,000.00
PNC2117271B1--01-301	MEDIAN CONCRETE BARRIER WALL	500	linear foot	$75.00	$37,500.00	$140.00	$70,000.00	$250.00	$125,000.00
PNC2117271B1--01-302	MEDIAN BARRIER WALL CONCRETE PRECAST	20	linear foot	$175.00	$3,500.00	$65.00	$1,300.00	$250.00	$5,000.00
PNC2117271B1--01-303	CONCRETE SIDEWALK AND DRIVEWAYS 6 THICK	15000	square yar	$100.00	$1,500,000.00	$42.00	$630,000.00	$90.00	$1,350,000.00
PNC2117271B1--01-304	CONCRETE SIDEWALK 8 THICK	100	square yar	$100.00	$10,000.00	$73.00	$7,300.00	$100.00	$10,000.00
PNC2117271B1--01-305	CONCRETE SIDEWALK 10 THICK	150	square yar	$140.00	$21,000.00	$95.00	$14,250.00	$110.00	$16,500.00
PNC2117271B1--01-306	PERVIOUS CONCRETE PAVEMENT - SIDEWALK 6 THICK	50	square yar	$55.00	$2,750.00	$85.00	$4,250.00	$100.00	$5,000.00
PNC2117271B1--01-307	PERVIOUS CONCRETE PAVEMENT - TRAFFIC RATED 8 THICK	50	square yar	$50.00	$2,500.00	$50.00	$2,500.00	$120.00	$6,000.00
PNC2117271B1--01-308	PATTERNED PAVEMENT VEHICULAR AREAS FDOT APL 523-000-009 TRAFFIC	200	square yar	$135.00	$27,000.00	$128.00	$25,600.00	$150.00	$30,000.00
PNC2117271B1--01-309	PATTERNED PAVEMENT NON-VEHICULAR AREAS	50	square yar	$40.00	$2,000.00	$115.00	$5,750.00	$100.00	$5,000.00
PNC2117271B1--01-310	CONCRETE DITCH PAVEMENT NON REINFORCED 6	50	square yar	$50.00	$2,500.00	$80.00	$4,000.00	$75.00	$3,750.00
PNC2117271B1--01-311	CONCRETE SLOPE PAVEMENT 6 REINFORCED	50	square yar	$80.00	$4,000.00	$90.00	$4,500.00	$75.00	$3,750.00
PNC2117271B1--01-312	PAVERS ARCHITECTURAL ROADWAY	50	square yar	$25.00	$1,250.00	$185.00	$9,250.00	$60.00	$3,000.00
PNC2117271B1--01-313	PAVERS ARCHITECTURAL SIDEWALK	20	square yar	$95.00	$1,900.00	$140.00	$2,800.00	$60.00	$1,200.00
PNC2117271B1--01-314	DETECTABLE WARNING ON EXISTING WALKING SURFACE RETROFIT	50	square foo	$35.00	$1,750.00	$45.00	$2,250.00	$50.00	$2,500.00
PNC2117271B1--01-315	DETECTABLE WARNING ON EXISTING WALKING SURFACE RETROFIT FDOT A	50	square foo	$35.00	$1,750.00	$48.00	$2,400.00	$50.00	$2,500.00
PNC2117271B1--01-316	DETECTABLE WARNING ON EXISTING WALKING SURFACE CAST-IN-PLACE	100	square foo	$250.00	$25,000.00	$150.00	$15,000.00	$200.00	$20,000.00
PNC2117271B1--01-317	ADA COMPLIANT CURB RAMP SINGLE DIRECTION	150	each	$3,100.00	$465,000.00	$1,300.00	$195,000.00	$2,500.00	$375,000.00
PNC2117271B1--01-318	ADA COMPLIANT CURB RAMP TWO-DIRECTION	30	each	$3,200.00	$96,000.00	$2,000.00	$60,000.00	$3,000.00	$90,000.00
PNC2117271B1--01-319	6 PVC BOLLARD WITH REFLECTIVE TAPE	5	each	$1,200.00	$6,000.00	$290.00	$1,450.00	$1,000.00	$5,000.00
PNC2117271B1--01-320	6 REMOVABLE AND LOCKABLE BOLLARD RPL6 BY TRAFFIC GUARD OR APPR	5	each	$2,200.00	$11,000.00	$450.00	$2,250.00	$500.00	$2,500.00
PNC2117271B1--01-321	RIPRAP SAND-CEMENT	10	cubic yard	$500.00	$5,000.00	$650.00	$6,500.00	$500.00	$5,000.00
PNC2117271B1--01-322	RIPRAP- RUBBLE BANK AND SHORE	10	ton	$500.00	$5,000.00	$95.00	$950.00	$500.00	$5,000.00
PNC2117271B1--01-323	RIPRAP RUBBLE DITCH LINING	10	ton	$500.00	$5,000.00	$95.00	$950.00	$500.00	$5,000.00
PNC2117271B1--01-324	BEDDING STONE	1000	ton	$20.00	$20,000.00	$49.00	$49,000.00	$90.00	$90,000.00
PNC2117271B1--01-325	SOUND/NOISE BARRIER-INC FOUNDATION PERMANENT	100	square foo	$30.00	$3,000.00	$40.00	$4,000.00	$50.00	$5,000.00
PNC2117271B1--01-326	PERIMETER WALL	100	square foo	$35.00	$3,500.00	$22.00	$2,200.00	$50.00	$5,000.00
PNC2117271B1--01-327	GUARDRAIL ROADWAY GENERAL TL-2	2500	linear foot	$15.00	$37,500.00	$29.00	$72,500.00	$20.00	$50,000.00
PNC2117271B1--01-328	GUARDRAIL ROADWAY GENERAL TL-3	2500	linear foot	$25.00	$62,500.00	$30.00	$75,000.00	$20.00	$50,000.00
PNC2117271B1--01-329	GUARDRAIL-SHOP BENT PANELS	50	linear foot	$12.00	$600.00	$34.00	$1,700.00	$40.00	$2,000.00
PNC2117271B1--01-330	GUARDRAIL-RUB RAIL SINGLE SIDED	50	linear foot	$10.00	$500.00	$40.00	$2,000.00	$20.00	$1,000.00
PNC2117271B1--01-331	PIPE RAIL FOR GUARDRAIL	50	linear foot	$15.00	$750.00	$14.00	$700.00	$25.00	$1,250.00
PNC2117271B1--01-332	RETROFIT EXIST GUARDRAIL-PEDESTRIAN/CYCLE PIPE RAIL	50	linear foot	$100.00	$5,000.00	$29.00	$1,450.00	$100.00	$5,000.00
PNC2117271B1--01-333	SPECIAL GUARDRAIL POST	5	each	$400.00	$2,000.00	$240.00	$1,200.00	$300.00	$1,500.00
PNC2117271B1--01-334	GUARDRAIL-BRIDGE ANCHORAGE ASSEMBLY	5	each	$250.00	$1,250.00	$4,100.00	$20,500.00	$1,500.00	$7,500.00
PNC2117271B1--01-335	GUARDRAIL-BRIDGE ANCHORAGE ASSEMBLY RELOCATE	5	each	$250.00	$1,250.00	$2,500.00	$12,500.00	$200.00	$1,000.00
PNC2117271B1--01-336	GUARDRAIL-BRIDGE ANCHORAGE ASSEMBLY REMOVE	5	each	$25.00	$125.00	$750.00	$3,750.00	$50.00	$250.00
PNC2117271B1--01-337	GUARDRAIL REMOVAL	1000	linear foot	$5.00	$5,000.00	$3.00	$3,000.00	$8.00	$8,000.00
PNC2117271B1--01-338	GUARDRAIL END ANCHORAGE ASSEMBLY/END TREATMENT-FLARED	5	each	$750.00	$3,750.00	$2,250.00	$11,250.00	$1,500.00	$7,500.00
PNC2117271B1--01-339	GUARDRAIL END ANCHORAGE ASSEMBLY/END TREATMENT-PARALLEL	5	each	$750.00	$3,750.00	$2,600.00	$13,000.00	$1,500.00	$7,500.00
PNC2117271B1--01-340	GUARDRAIL END ANCHORAGE ASSEMBLY/END TREATMENT-TYPE II	5	each	$750.00	$3,750.00	$1,500.00	$7,500.00	$1,500.00	$7,500.00
PNC2117271B1--01-341	GUARDRAIL END ANCHORAGE ASSEMBLY/END TREATMENT-TYPE CRT	5	each	$750.00	$3,750.00	$3,000.00	$15,000.00	$1,500.00	$7,500.00
PNC2117271B1--01-342	GUARDRAIL PANELS-INSTALL 0 - 50 FEET	100	linear foot	$2.00	$200.00	$7.00	$700.00	$20.00	$2,000.00
PNC2117271B1--01-343	GUARDRAIL PANELS-SHOP BENT	100	linear foot	$10.00	$1,000.00	$31.00	$3,100.00	$30.00	$3,000.00
PNC2117271B1--01-344	GUARDRAIL PANELS-0-50 FEET	100	linear foot	$10.00	$1,000.00	$26.00	$2,600.00	$30.00	$3,000.00
PNC2117271B1--01-345	GUARDRAIL THRIE BEAM-REPLACE	100	linear foot	$10.00	$1,000.00	$35.00	$3,500.00	$50.00	$5,000.00
PNC2117271B1--01-346	GUARDRAIL-RESET	100	linear foot	$8.00	$800.00	$10.50	$1,050.00	$15.00	$1,500.00
PNC2117271B1--01-347	BARRIERS DELINEATORS	30	each	$12.00	$360.00	$30.00	$900.00	$13.00	$390.00
PNC2117271B1--01-348	RETAINING WALL SYSTEM PERMANENT EXCLUDING BARRIER	100	square foo	$60.00	$6,000.00	$55.00	$5,500.00	$50.00	$5,000.00
PNC2117271B1--01-349	RETAINING WALL SYSTEM PERMANENT-WIDENING ATTACHED TO EXISTING	100	square foo	$30.00	$3,000.00	$60.00	$6,000.00	$50.00	$5,000.00
PNC2117271B1--01-350	FENCING TYPE B 0.0-6.0 STANDARD	1000	linear foot	$40.00	$40,000.00	$29.00	$29,000.00	$35.00	$35,000.00
PNC2117271B1--01-351	FENCING TYPE B 6.1-8.0 STANDARD	100	linear foot	$41.00	$4,100.00	$33.00	$3,300.00	$40.00	$4,000.00
PNC2117271B1--01-352	FENCING TYPE B 8.1-10.0 STANDARD	50	linear foot	$42.00	$2,100.00	$36.00	$1,800.00	$45.00	$2,250.00
PNC2117271B1--01-353	FENCING TYPE B 0.5-6.0 W/ VINYL COATING	50	linear foot	$60.00	$3,000.00	$28.00	$1,400.00	$40.00	$2,000.00
PNC2117271B1--01-354	FENCING TYPE B 6.1-8.0 W/ VINYL COATING	50	linear foot	$65.00	$3,250.00	$30.00	$1,500.00	$45.00	$2,250.00
PNC2117271B1--01-355	FENCING TYPE B 8.1-10.0 W/ VINYL COATING	50	linear foot	$80.00	$4,000.00	$36.00	$1,800.00	$50.00	$2,500.00
PNC2117271B1--01-356	FENCING TYPE B 5.1-6.0 W/BARBED WIRE ATTACHMENT	20	linear foot	$12.50	$250.00	$29.00	$580.00	$25.00	$500.00
PNC2117271B1--01-357	FENCING TYPE B 6.1-7.0 W/BARBED WIRE ATTACHMENT	20	linear foot	$13.00	$260.00	$33.00	$660.00	$30.00	$600.00
PNC2117271B1--01-358	FENCING TYPE B 8.1-10.0 W/BARBED WIRE ATTACHMENT	20	linear foot	$13.00	$260.00	$38.00	$760.00	$35.00	$700.00
PNC2117271B1--01-359	FENCING TYPE B 0.0-6.0 RESET EXISTING	50	linear foot	$5.00	$250.00	$14.00	$700.00	$30.00	$1,500.00
PNC2117271B1--01-360	FENCING TYPE B 6.1-8.0 RESET EXISTING	50	linear foot	$5.00	$250.00	$18.00	$900.00	$35.00	$1,750.00
PNC2117271B1--01-361	FENCING TYPE B 0.0-10.0 RELOCATE	50	linear foot	$5.00	$250.00	$22.00	$1,100.00	$50.00	$2,500.00
PNC2117271B1--01-362	FENCING TYPE B TOP RAIL	100	linear foot	$6.00	$600.00	$10.00	$1,000.00	$5.00	$500.00
PNC2117271B1--01-363	FENCE GATE TYPE B SINGLE 0-6.0 OPENING	1	each	$600.00	$600.00	$700.00	$700.00	$500.00	$500.00
PNC2117271B1--01-364	FENCE GATE TYPE B SINGLE 6.1-20.0 OPENING	2	each	$900.00	$1,800.00	$1,900.00	$3,800.00	$1,000.00	$2,000.00
PNC2117271B1--01-365	FENCE GATE TYPE B DOUBLE 6.1-18.0 OPENING	1	each	$650.00	$650.00	$3,000.00	$3,000.00	$700.00	$700.00
PNC2117271B1--01-366	FENCE GATE TYPE B DOUBLE 18.1-24 OPENING	1	each	$900.00	$900.00	$3,300.00	$3,300.00	$1,000.00	$1,000.00
PNC2117271B1--01-367	FENCE GATE TYPE B DOUBLE 24.1-30.0 OPENING	1	each	$1,200.00	$1,200.00	$3,900.00	$3,900.00	$2,000.00	$2,000.00
PNC2117271B1--01-368	FENCE GATE TYPE B DOUBLE GREATER THAN 30 OPENING	1	each	$1,400.00	$1,400.00	$5,300.00	$5,300.00	$2,500.00	$2,500.00
PNC2117271B1--01-369	FENCE GATE TYPE B SLIDING/CANTILEVER 6.1-12 OPENING	1	each	$1,150.00	$1,150.00	$3,300.00	$3,300.00	$2,000.00	$2,000.00
PNC2117271B1--01-370	FENCE GATE TYPE B SLIDING/CANTILEVER 12.1-18 OPENING	1	each	$1,150.00	$1,150.00	$3,600.00	$3,600.00	$2,200.00	$2,200.00
PNC2117271B1--01-371	FENCE GATE TYPE B SLIDING/CANTILEVER 18.1-20 OPENING	1	each	$1,400.00	$1,400.00	$4,000.00	$4,000.00	$2,400.00	$2,400.00

				DP Development		Weekley Ashphalt Paving		FG Construction LLC	
Item #	Item	Qty	Unit	Price	Total	Price	Total	Price	Total
PNC2117271B1--01-372	FENCE GATE TYPE B SLIDING/CANTILEVER 20.1-24 OPENING	1	each	$1,500.00	$1,500.00	$4,300.00	$4,300.00	$2,600.00	$2,600.00
PNC2117271B1--01-373	FENCE GATE TYPE B SLIDING/CANTILEVER 24.1-30 OPENING	1	each	$1,800.00	$1,800.00	$5,000.00	$5,000.00	$2,800.00	$2,800.00
PNC2117271B1--01-374	FENCE GATE TYPE B SLIDING/CANTILEVER GREATER THAN 30 OPENING	1	each	$2,900.00	$2,900.00	$5,400.00	$5,400.00	$3,000.00	$3,000.00
PNC2117271B1--01-375	PERFORMANCE TURF HYDROSEED ONLY	1000	square yar	$0.75	$750.00	$1.00	$1,000.00	$1.00	$1,000.00
PNC2117271B1--01-376	PERFORMANCE TURF BONDED FIBER MATRIX ONLY	200	square yar	$0.50	$100.00	$3.50	$700.00	$1.00	$200.00
PNC2117271B1--01-377	PERFORMANCE TURF SEED AND MULCH ONLY	200	square yar	$1.50	$300.00	$1.00	$200.00	$1.00	$200.00
PNC2117271B1--01-378	PERFORMANCE TURF SOD	30000	square yar	$7.25	$217,500.00	$2.99	$89,700.00	$8.00	$240,000.00
PNC2117271B1--01-379	MULCH REPLACEMENT	50	cubic yard	$75.00	$3,750.00	$50.00	$2,500.00	$60.00	$3,000.00
PNC2117271B1--01-380	PLASTIC EROSION MAT TURF REINFORCED MAT TYPE 1	100	square yar	$7.00	$700.00	$5.50	$550.00	$6.00	$600.00
PNC2117271B1--01-381	PLASTIC EROSION MAT TURF REINFORCED MAT TYPE 2	100	square yar	$9.00	$900.00	$5.50	$550.00	$8.00	$800.00
PNC2117271B1--01-382	PLASTIC EROSION MAT TURF REINFORCED MAT TYPE 3	100	square yar	$12.00	$1,200.00	$5.50	$550.00	$12.00	$1,200.00
PNC2117271B1--01-383	MISCELLANEOUS GROUND COVER/SHRUBS INSTALLATION (1-GALLON CON	200	each	$10.00	$2,000.00	$7.50	$1,500.00	$7.00	$1,400.00
PNC2117271B1--01-384	MISCELLANEOUS GROUND COVER/SHRUBS INSTALLATION (3-GALLON CON	200	each	$18.00	$3,600.00	$12.50	$2,500.00	$15.00	$3,000.00
PNC2117271B1--01-385	MISCELLANEOUS GROUND COVER/SHRUBS INSTALLATION (7-GALLON CON	200	each	$50.00	$10,000.00	$57.00	$11,400.00	$20.00	$4,000.00
PNC2117271B1--01-386	MISCELLANEOUS SMALL TREES - UP TO 10 OVERALL HEIGHT	50	each	$325.00	$16,250.00	$300.00	$15,000.00	$300.00	$15,000.00
PNC2117271B1--01-387	MISCELLANEOUS LARGE TREES 10-12 OVERALL HEIGHT	50	each	$450.00	$22,500.00	$450.00	$22,500.00	$350.00	$17,500.00
PNC2117271B1--01-388	MISCELLANEOUS LARGE TREES 13-18 OVERALL HEIGHT	1000	linear foot	$60.00	$60,000.00	$30.00	$30,000.00	$50.00	$50,000.00
PNC2117271B1--01-389	FLORIDA THATCH PALM - UP TO 12 OVERALL HEIGHT	100	linear foot	$30.00	$3,000.00	$50.00	$5,000.00	$40.00	$4,000.00
PNC2117271B1--01-390	ROYSTONEA SPP. (ROYAL PALM) PLANT UP TO 12 OVERALL HEIGHT	100	linear foot	$35.00	$3,500.00	$32.00	$3,200.00	$50.00	$5,000.00
PNC2117271B1--01-391	ROYSTONEA SPP. (ROYAL PALM) PLANT 13-20 OVERALL HEIGHT	200	linear foot	$45.00	$9,000.00	$35.00	$7,000.00	$60.00	$12,000.00
PNC2117271B1--01-392	SABAL PALMETTO (CABBAGE PALM) UP TO 12 OVERALL HEIGHT	200	linear foot	$27.00	$5,400.00	$25.00	$5,000.00	$35.00	$7,000.00
PNC2117271B1--01-393	SABAL PALMETTO (CABBAGE PALM) 13-20 OVERALL HEIGHT	400	linear foot	$21.00	$8,400.00	$25.00	$10,000.00	$25.00	$10,000.00
PNC2117271B1--01-394	DELONIX REGIA (ROYAL POINCIANA) PLANT UP TO 12 OVERALL HEIGHT	100	feet	$45.00	$4,500.00	$30.00	$3,000.00	$50.00	$5,000.00
PNC2117271B1--01-395	DELONIX REGIA (ROYAL POINCIANA) PLANT 13-20 OVERALL HEIGHT	100	feet	$57.00	$5,700.00	$30.00	$3,000.00	$50.00	$5,000.00
PNC2117271B1--01-396	LARGERSTROEMIA INDICA (CRAPE MYRTLE) PLANT UP TO 12 OVERALL HEI	200	feet	$45.00	$9,000.00	$30.00	$6,000.00	$50.00	$10,000.00
PNC2117271B1--01-397	BURSERA SIMARUBA (GUMBO LIMBO) PLANT UP TO 12 OVERALL HEIGHT	200	feet	$45.00	$9,000.00	$27.00	$5,400.00	$50.00	$10,000.00
PNC2117271B1--01-398	BURSERA SIMARUBA (GUMBO LIMBO) PLANT 13-20 OVERALL HEIGHT	200	feet	$57.00	$11,400.00	$27.00	$5,400.00	$50.00	$10,000.00
PNC2117271B1--01-399	QUERCUS VIRGINIANA (LIVE OAK) PLANT UP TO 12 OVERALL HEIGHT	200	feet	$45.00	$9,000.00	$35.00	$7,000.00	$50.00	$10,000.00
PNC2117271B1--01-400	QUERCUS VIRGINIANA (LIVE OAK) PLANT 13-20 OVERALL HEIGHT	500	feet	$57.00	$28,500.00	$45.00	$22,500.00	$50.00	$25,000.00
PNC2117271B1--01-401	TAXODIUM SPP. (CYPRESS BALD OR POND) PLANT UP TO 12 OVERALL HEIG	200	feet	$45.00	$9,000.00	$27.00	$5,400.00	$50.00	$10,000.00
PNC2117271B1--01-402	TAXODIUM SPP. (CYPRESS BALD OR POND) PLANT 13-20 OVERALL HEIGHT	500	feet	$57.00	$28,500.00	$27.00	$13,500.00	$50.00	$25,000.00
PNC2117271B1--01-403	BULNESIA ARBOREA (VERA WOOD) PLANT UP TO 12 OVERALL HEIGHT	500	feet	$15.00	$7,500.00	$35.00	$17,500.00	$30.00	$15,000.00
PNC2117271B1--01-404	TOPSOIL 50% PLANTING SOIL AND 50% SAND	500	cubic yard	$25.00	$12,500.00	$35.00	$17,500.00	$50.00	$25,000.00
PNC2117271B1--01-405	FERTILIZER 50 LB. BAG	5	each	$50.00	$250.00	$55.00	$275.00	$50.00	$250.00
PNC2117271B1--01-406	WATERING (per KGAL)	200	each	$80.00	$16,000.00	$25.00	$5,000.00	$200.00	$40,000.00
PNC2117271B1--01-407	ROOT BARRIER	2000	linear foot	$40.00	$80,000.00	$12.50	$25,000.00	$30.00	$60,000.00
PNC2117271B1--01-408	SPRINKLER HEADS POP-UP ROTATING	300	each	$80.00	$24,000.00	$70.00	$21,000.00	$60.00	$18,000.00
PNC2117271B1--01-409	4 PVC PIPE SCH. 40	500	linear foot	$9.25	$4,625.00	$18.00	$9,000.00	$10.00	$5,000.00
PNC2117271B1--01-410	3 PVC PIPE SCH. 40	500	linear foot	$9.20	$4,600.00	$14.00	$7,000.00	$9.00	$4,500.00
PNC2117271B1--01-411	2 PVC PIPE SCH. 40	500	linear foot	$9.15	$4,575.00	$13.00	$6,500.00	$8.00	$4,000.00
PNC2117271B1--01-412	1 PVC PIPE SCH. 40	1500	linear foot	$9.50	$14,250.00	$10.00	$15,000.00	$7.00	$10,500.00
PNC2117271B1--01-413	3/4 PVC PIPE SCH. 40	500	linear foot	$10.00	$5,000.00	$9.00	$4,500.00	$6.00	$3,000.00
PNC2117271B1--01-414	ROOT PRUNING/TREE TRIMMING CREW 3-PERSON CREW 4 HR MINIMUM	100	hour	$200.00	$20,000.00	$350.00	$35,000.00	$250.00	$25,000.00
PNC2117271B1--01-415	TREE REMOVAL CREW 3-PERSON CREW 4 HR MINIMUM CHARGE	10	hour	$200.00	$2,000.00	$400.00	$4,000.00	$250.00	$2,500.00
PNC2117271B1--01-416	STUMP GRINDER 2-PERSON CREW 4 HR MINIMUM CHARGE	10	hour	$200.00	$2,000.00	$150.00	$1,500.00	$200.00	$2,000.00
PNC2117271B1--01-417	GRAFFITI REMOVAL 100 SF MINIMUM CHARGE	5000	square foo	$0.25	$1,250.00	$2.00	$10,000.00	$0.30	$1,500.00
PNC2117271B1--01-418	CERTIFIED ARBORIST	20	hour	$175.00	$3,500.00	$125.00	$2,500.00	$150.00	$3,000.00
PNC2117271B1--01-419	ADDITIONAL LABORER	2000	hour	$55.00	$110,000.00	$45.00	$90,000.00	$45.00	$90,000.00
PNC2117271B1--01-420	SKILLED LABORER	100	hour	$60.00	$6,000.00	$45.00	$4,500.00	$75.00	$7,500.00
PNC2117271B1--01-421	MASTER ELECTRICIAN	10	hour	$250.00	$2,500.00	$125.00	$1,250.00	$200.00	$2,000.00
PNC2117271B1--01-422	FDOT CERTIFIED SIGNAL TECHNICIAN 2-PERSON CREW	10	hour	$350.00	$3,500.00	$160.00	$1,600.00	$350.00	$3,500.00
PNC2117271B1--01-423	DIVER (REGULAR TIME) 4 HOUR MINIMUM CHARGE	10	hour	$300.00	$3,000.00	$110.00	$1,100.00	$200.00	$2,000.00
PNC2117271B1--01-424	QUALIFIED CONSTRUCTION TRAINING QUALIFICATION PROGRAM (CTQP) A	100	hour	$130.00	$13,000.00	$75.00	$7,500.00	$200.00	$20,000.00
PNC2117271B1--01-425	TRENCH BOX UP TO 10	20	day	$500.00	$10,000.00	$300.00	$6,000.00	$400.00	$8,000.00
PNC2117271B1--01-426	TRUCK MOUNTED ATTENUATOR (TMA) HOURS MINIMUM CHARGE	20	hour	$220.00	$4,400.00	$90.00	$1,800.00	$150.00	$3,000.00
PNC2117271B1--01-427	SERVICE TRUCK & OPERATOR PERSONNEL LIFT TO 35 FT HIGH ACCESS 4 HR	10	hour	$100.00	$1,000.00	$150.00	$1,500.00	$150.00	$1,500.00
PNC2117271B1--01-428	BUCKET TRUCK & OPERATOR 50 FT REACH 4 HR MINIMUM CHARGE	10	hour	$125.00	$1,250.00	$260.00	$2,600.00	$150.00	$1,500.00
PNC2117271B1--01-429	D3 OR D5 BACKHOE & OPERATOR	30	hour	$175.00	$5,250.00	$108.00	$3,240.00	$150.00	$4,500.00
PNC2117271B1--01-430	CRANE & OPERATOR INSTALLATIONS LESS THAN 85 FT HIGH AND 22 TON 4	5	hour	$125.00	$625.00	$350.00	$1,750.00	$150.00	$750.00
PNC2117271B1--01-431	VAC TRUCK 3-PERSON CREW 4 HR MINIMUM CHARGE	100	hour	$300.00	$30,000.00	$300.00	$30,000.00	$300.00	$30,000.00
PNC2117271B1--01-432	SMALL ALL WHEEL DRIVE OUTDOOR VACUUM SWEEPER AND OPERATOR F	500	hour	$35.00	$17,500.00	$170.00	$85,000.00	$75.00	$37,500.00
PNC2117271B1--01-433	MECHANICAL ROADWAY SWEEPER AND OPERATOR (4 HR MINIMUM CHAR	100	hour	$55.00	$5,500.00	$69.00	$6,900.00	$75.00	$7,500.00
PNC2117271B1--01-434	HYDRO MOWER AND OPERATOR UP TO 20 LF DECK (4 HRS MINIMUM CHA	50	hour	$125.00	$6,250.00	$84.00	$4,200.00	$75.00	$3,750.00
PNC2117271B1--01-435	SKID STEER LOADER & OPERATOR 1850 LB MINIMUM 4 HR MINIMUM CHA	200	hour	$155.00	$31,000.00	$94.00	$18,800.00	$75.00	$15,000.00
PNC2117271B1--01-436	GRAPPLE TRUCK/SELF LOADER AND OPERATOR SINGLE AXLE 16 CUBIC YAR	50	hour	$150.00	$7,500.00	$120.00	$6,000.00	$150.00	$7,500.00
PNC2117271B1--01-437	DOZER D3 & OPERATOR 4 HR MINIMUM CHARGE	20	hour	$80.00	$1,600.00	$115.00	$2,300.00	$150.00	$3,000.00
PNC2117271B1--01-438	DOZER D4 & OPERATOR 4 HR MINIMUM CHARGE	20	hour	$110.00	$2,200.00	$125.00	$2,500.00	$150.00	$3,000.00
PNC2117271B1--01-439	DOZER D5 & OPERATOR 4 HR MINIMUM CHARGE	20	hour	$115.00	$2,300.00	$140.00	$2,800.00	$150.00	$3,000.00
PNC2117271B1--01-440	EXCAVATOR 30000 LB & OPERATOR 4 HR MINIMUM CHARGE	20	hour	$140.00	$2,800.00	$128.00	$2,560.00	$150.00	$3,000.00
PNC2117271B1--01-441	EXCAVATOR 75000 LB & OPERATOR 4 HR MINIMUM CHARGE	20	hour	$145.00	$2,900.00	$150.00	$3,000.00	$150.00	$3,000.00
PNC2117271B1--01-442	VIBRATORY ROLLER 5 TON & OPERATOR 4 HR MINIMUM CHARGE	20	hour	$55.00	$1,100.00	$69.00	$1,380.00	$150.00	$3,000.00
PNC2117271B1--01-443	VIBRATORY ROLLER 10 TON & OPERATOR 4 HR MINIMUM CHARGE	20	hour	$65.00	$1,300.00	$93.00	$1,860.00	$150.00	$3,000.00
PNC2117271B1--01-444	BARGE & OPERATOR 31 FT LENGTH MINIMUM 4 HR MINIMUM CHARGE	20	hour	$300.00	$6,000.00	$270.00	$5,400.00	$300.00	$6,000.00
PNC2117271B1--01-445	BARGE WITH CRANE & OPERATOR 20 TON RATED 4 HR MINIMUM CHARGE	20	hour	$400.00	$8,000.00	$420.00	$8,400.00	$500.00	$10,000.00
PNC2117271B1--01-446	BOAT/WATER CRAFT WITH MOTOR 30 FT LENGTH MAXIMUM 4 HR MINIM	100	hour	$225.00	$22,500.00	$175.00	$17,500.00	$175.00	$17,500.00
PNC2117271B1--01-447	DUMP TRUCK & OPERATOR SINGLE-AXLE 5 CY MINIMUM CAPACITY 4 HR M	20	hour	$50.00	$1,000.00	$60.00	$1,200.00	$75.00	$1,500.00
PNC2117271B1--01-448	DUMP TRUCK & OPERATOR TRI-AXLE 16 CY MINIMUM CAPACITY 4 HR MIN	50	hour	$80.00	$4,000.00	$69.00	$3,450.00	$80.00	$4,000.00
PNC2117271B1--01-449	TRASH TRUCK RENTAL & OPERATOR 16 YD MINIMUM VOLUME 4 HR MINIM	20	hour	$40.00	$800.00	$90.00	$1,800.00	$80.00	$1,600.00
PNC2117271B1--01-450	PORTABLE TOILET SINGLE STALL	200	week	$200.00	$40,000.00	$100.00	$20,000.00	$100.00	$20,000.00
PNC2117271B1--01-451	CONDUIT FURNISH & INSTALL OPEN TRENCH	150	linear foot	$25.00	$3,750.00	$5.50	$825.00	$15.00	$2,250.00
PNC2117271B1--01-452	CONDUIT FURNISH & INSTALL DIRECTIONAL BORE 6 TO < 12	50	linear foot	$30.00	$1,500.00	$25.00	$1,250.00	$35.00	$1,750.00
PNC2117271B1--01-453	CONDUIT FURNISH & INSTALL DIRECTIONAL BORE 12 TO < 18	20	linear foot	$30.00	$600.00	$25.00	$500.00	$120.00	$2,400.00
PNC2117271B1--01-454	CONDUIT FURNISH & INSTALL DIRECTIONAL BORE 18 TO < 24	20	linear foot	$50.00	$1,000.00	$25.00	$500.00	$180.00	$3,600.00
PNC2117271B1--01-455	CONDUIT FURNISH & INSTALL DIRECTIONAL BORE 24 TO < 36	20	linear foot	$100.00	$2,000.00	$25.00	$500.00	$240.00	$4,800.00
PNC2117271B1--01-456	CONDUIT FURNISH & INSTALL DIRECTIONAL BORE 36 TO < 48	20	linear foot	$100.00	$2,000.00	$25.00	$500.00	$300.00	$6,000.00
PNC2117271B1--01-457	CONDUIT FURNISH & INSTALL DIRECTIONAL BORE 48 TO < 60	20	linear foot	$100.00	$2,000.00	$25.00	$500.00	$400.00	$8,000.00
PNC2117271B1--01-458	CONDUIT FURNISH & INSTALL DIRECTIONAL BORE > 60	20	linear foot	$100.00	$2,000.00	$25.00	$500.00	$500.00	$10,000.00
PNC2117271B1--01-459	CONDUIT FURNISH & INSTALL ABOVEGROUND	20	linear foot	$20.00	$400.00	$10.00	$200.00	$30.00	$600.00
PNC2117271B1--01-460	SIGNAL CABLE NEW OR RECONSTRUCTED FURNISH & INSTALL	150	linear foot	$15.00	$2,250.00	$2.00	$300.00	$50.00	$7,500.00
PNC2117271B1--01-461	SIGNAL CABLE REPAIR/ REPLACE/OTHER FURNISH & INSTALL	100	linear foot	$10.00	$1,000.00	$2.00	$200.00	$15.00	$1,500.00
PNC2117271B1--01-462	SIGNAL CABLE ADJUST	100	linear foot	$10.00	$1,000.00	$2.00	$200.00	$15.00	$1,500.00
PNC2117271B1--01-463	SIGNAL CABLE REMOVE	100	linear foot	$4.00	$400.00	$1.00	$100.00	$5.00	$500.00
PNC2117271B1--01-464	PULL & SPLICE BOX 13 x 24 COVER SIZE	20	each	$1,100.00	$22,000.00	$650.00	$13,000.00	$1,200.00	$24,000.00
PNC2117271B1--01-465	PULL & SPLICE BOX 13 x 24 COVER SIZE TIER 22	5	each	$1,200.00	$6,000.00	$800.00	$4,000.00	$1,400.00	$7,000.00
PNC2117271B1--01-466	WATER METER BOX	20	each	$1,100.00	$22,000.00	$1,400.00	$28,000.00	$1,000.00	$20,000.00
PNC2117271B1--01-467	PULL & SPLICE BOX INSTALL	50	each	$775.00	$38,750.00	$350.00	$17,500.00	$500.00	$25,000.00
PNC2117271B1--01-468	PULL & SPLICE BOX RELOCATE	20	each	$800.00	$16,000.00	$650.00	$13,000.00	$700.00	$14,000.00
PNC2117271B1--01-469	PULL & SPLICE BOX REMOVE	5	each	$400.00	$2,000.00	$150.00	$750.00	$200.00	$1,000.00
PNC2117271B1--01-470	ELECTRICAL SERVICE WIRE	100	linear foot	$10.00	$1,000.00	$3.50	$350.00	$10.00	$1,000.00
PNC2117271B1--01-471	ALUMINUM SIGNALS POLE PEDESTAL	1	each	$1,500.00	$1,500.00	$1,600.00	$1,600.00	$1,200.00	$1,200.00
PNC2117271B1--01-472	ALUMINUM SIGNALS POLE PEDESTRIAN DETECTOR POST	1	each	$1,600.00	$1,600.00	$3,000.00	$3,000.00	$1,200.00	$1,200.00
PNC2117271B1--01-473	ALUMINUM SIGNALS POLE RELOCATE	1	each	$1,500.00	$1,500.00	$800.00	$800.00	$500.00	$500.00
PNC2117271B1--01-474	ALUMINUM SIGNALS POLE REMOVE	1	each	$300.00	$300.00	$400.00	$400.00	$200.00	$200.00
PNC2117271B1--01-475	PEDESTRIAN SIGNAL LED COUNTDOWN 1 WAY	1	assembly	$1,100.00	$1,100.00	$800.00	$800.00	$750.00	$750.00
PNC2117271B1--01-476	PEDESTRIAN SIGNAL LED-COUNT DOWN 2 WAYS	1	assembly	$1,750.00	$1,750.00	$1,200.00	$1,200.00	$1,200.00	$1,200.00
PNC2117271B1--01-477	PEDESTRIAN SIGNAL RELOCATE	5	assembly	$500.00	$2,500.00	$500.00	$2,500.00	$500.00	$2,500.00
PNC2117271B1--01-478	PEDESTRIAN SIGNAL REMOVED PEDESTRIAN SIGNAL POLE/PEDESTAL TO RE	5	assembly	$125.00	$625.00	$500.00	$2,500.00	$150.00	$750.00
PNC2117271B1--01-479	PEDESTRIAN SIGNAL LED 1 DIRECTION	2	assembly	$900.00	$1,800.00	$800.00	$1,600.00	$700.00	$1,400.00
PNC2117271B1--01-480	PEDESTRIAN SIGNAL LED 2 DIRECTIONS	1	assembly	$2,500.00	$2,500.00	$1,200.00	$1,200.00	$1,200.00	$1,200.00
PNC2117271B1--01-481	PEDESTRIAN DETECTOR STANDARD	5	each	$250.00	$1,250.00	$800.00	$4,000.00	$200.00	$1,000.00
PNC2117271B1--01-482	PEDESTRIAN DETECTOR ACCESSIBLE	5	each	$1,500.00	$7,500.00	$1,000.00	$5,000.00	$1,600.00	$8,000.00
PNC2117271B1--01-483	PEDESTRIAN DETECTOR RELOCATE	5	each	$225.00	$1,125.00	$500.00	$2,500.00	$250.00	$1,250.00
PNC2117271B1--01-484	PEDESTRIAN DETECTOR REMOVE- POLE/PEDESTAL TO REMAIN	5	each	$85.00	$425.00	$500.00	$2,500.00	$75.00	$375.00
PNC2117271B1--01-485	SINGLE POST SIGN GROUND MOUNT UP TO 12 SF	10	assembly	$800.00	$8,000.00	$325.00	$3,250.00	$420.00	$4,200.00
PNC2117271B1--01-486	SINGLE POST SIGN GROUND MOUNT SLIP BASE ONLY UP TO 12 SF	5	assembly	$515.00	$2,575.00	$360.00	$1,800.00	$700.00	$3,500.00
PNC2117271B1--01-487	SINGLE POWDER COATED POST SIGN GROUND MOUNT UP TO 12 SF	5	assembly	$525.00	$2,625.00	$600.00	$3,000.00	$1,400.00	$7,000.00
PNC2117271B1--01-488	SINGLE POWDER COATED POST SIGN GROUND MOUNT SLIP BASE ONLY UI	2	assembly	$700.00	$1,400.00	$700.00	$1,400.00	$1,700.00	$3,400.00
PNC2117271B1--01-489	SINGLE POST SIGN GROUND MOUNT 12-20 SF	5	assembly	$1,500.00	$7,500.00	$800.00	$4,000.00	$1,300.00	$6,500.00
PNC2117271B1--01-490	SINGLE POST SIGN GROUND MOUNT SLIP BASE ONLY 12-20 SF	2	assembly	$1,500.00	$3,000.00	$950.00	$1,900.00	$1,500.00	$3,000.00
PNC2117271B1--01-491	SINGLE POWDER COATED POST SIGN GROUND MOUNT 12-20 SF	2	assembly	$1,510.00	$3,020.00	$950.00	$1,900.00	$2,000.00	$4,000.00
PNC2117271B1--01-492	SINGLE POWDER COATED POST SIGN GROUND MOUNT SLIP BASE ONLY 12	2	assembly	$1,100.00	$2,200.00	$1,000.00	$2,000.00	$2,300.00	$4,600.00
PNC2117271B1--01-493	SINGLE POST SIGN GROUND MOUNT 21-30 SF	2	assembly	$800.00	$1,600.00	$1,400.00	$2,800.00	$1,900.00	$3,800.00
PNC2117271B1--01-494	SINGLE POST SIGN GROUND MOUNT SLIP BASE ONLY 21-30 SF	2	assembly	$900.00	$1,800.00	$1,600.00	$3,200.00	$2,000.00	$4,000.00
PNC2117271B1--01-495	SINGLE POWDER COATED POST SIGN GROUND MOUNT 21-30 SF	2	assembly	$900.00	$1,800.00	$1,800.00	$3,600.00	$2,900.00	$5,800.00
PNC2117271B1--01-496	SINGLE POWDER COATED POST SIGN GROUND MOUNT SLIP BASE ONLY 21	2	assembly	$1,100.00	$2,200.00	$1,600.00	$3,200.00	$2,900.00	$5,800.00

				DP Development		Weekley Ashphalt Paving		FG Construction LLC	
Item #	Item	Qty	Unit	Price	Total	Price	Total	Price	Total
PNC2117271B1--01-497	SINGLE POST SIGN GROUND MOUNT 31+ SF	2	assembly	$1,000.00	$2,000.00	$2,500.00	$5,000.00	$2,600.00	$5,200.00
PNC2117271B1--01-498	SINGLE POST SIGN GROUND MOUNT SLIP BASE ONLY 31+ SF	2	assembly	$1,200.00	$2,400.00	$2,900.00	$5,800.00	$2,600.00	$5,200.00
PNC2117271B1--01-499	SINGLE POWDER COATED POST SIGN GROUND MOUNT 31+ SF	2	assembly	$1,300.00	$2,600.00	$2,800.00	$5,600.00	$2,900.00	$5,800.00
PNC2117271B1--01-500	SINGLE POWDER COATED POST SIGN GROUND MOUNT SLIP BASE ONLY 31	2	assembly	$1,500.00	$3,000.00	$3,500.00	$7,000.00	$3,500.00	$7,000.00
PNC2117271B1--01-501	SINGLE POST SIGN GROUND MOUNT IN-STREET FLEXIBLE POST SIGN	2	assembly	$75.00	$150.00	$400.00	$800.00	$500.00	$1,000.00
PNC2117271B1--01-502	SINGLE POST SIGN BARRIER MOUNT INDEX 11871 UP TO 12 SF	2	assembly	$100.00	$200.00	$500.00	$1,000.00	$2,000.00	$4,000.00
PNC2117271B1--01-503	SINGLE POWDER COATED POST SIGN BARRIER MOUNT INDEX 11871 UP TO	2	assembly	$1,000.00	$2,000.00	$700.00	$1,400.00	$3,500.00	$7,000.00
PNC2117271B1--01-504	SINGLE POST SIGN INSTALL	5	assembly	$300.00	$1,500.00	$325.00	$1,625.00	$300.00	$1,500.00
PNC2117271B1--01-505	SINGLE POST SIGN RELOCATE	15	assembly	$360.00	$5,400.00	$200.00	$3,000.00	$300.00	$4,500.00
PNC2117271B1--01-506	SINGLE POST SIGN REMOVE	5	assembly	$135.00	$675.00	$50.00	$250.00	$50.00	$250.00
PNC2117271B1--01-507	MULTI- POST SIGN GROUND MOUNT UP TO 50 SF	1	assembly	$1,000.00	$1,000.00	$2,900.00	$2,900.00	$6,000.00	$6,000.00
PNC2117271B1--01-508	MULTI- POST SIGN GROUND MOUNT 51-100 SF	1	assembly	$1,200.00	$1,200.00	$5,000.00	$5,000.00	$12,000.00	$12,000.00
PNC2117271B1--01-509	MULTI- POST SIGN GROUND MOUNT RELOCATE	1	assembly	$750.00	$750.00	$700.00	$700.00	$4,000.00	$4,000.00
PNC2117271B1--01-510	MULTI- POST SIGN GROUND MOUNT REMOVE	5	assembly	$750.00	$3,750.00	$900.00	$4,500.00	$700.00	$3,500.00
PNC2117271B1--01-511	SIGN EXISTING- REMOVE SPAN WIRE	5	assembly	$100.00	$500.00	$100.00	$500.00	$500.00	$2,500.00
PNC2117271B1--01-512	SIGN EXISTING- REMOVE BRIDGE MOUNTED	5	assembly	$200.00	$1,000.00	$200.00	$1,000.00	$900.00	$4,500.00
PNC2117271B1--01-513	SIGN EXISTING- RELOCATE SPAN WIRE	5	assembly	$85.00	$425.00	$600.00	$3,000.00	$3,000.00	$15,000.00
PNC2117271B1--01-514	SIGN EXISTING- RELOCATE BRIDGE MOUNTED	5	assembly	$250.00	$1,250.00	$900.00	$4,500.00	$5,000.00	$25,000.00
PNC2117271B1--01-515	SIGN PANELS 15 OR LESS	5	each	$195.00	$975.00	$300.00	$1,500.00	$300.00	$1,500.00
PNC2117271B1--01-516	SIGN PANELS 16-100	5	each	$350.00	$1,750.00	$600.00	$3,000.00	$2,900.00	$14,500.00
PNC2117271B1--01-517	SIGN PANELS RELOCATE 15 OR LESS	5	each	$85.00	$425.00	$200.00	$1,000.00	$230.00	$1,150.00
PNC2117271B1--01-518	SIGN PANELS RELOCATE 16-100	5	each	$95.00	$475.00	$600.00	$3,000.00	$2,300.00	$11,500.00
PNC2117271B1--01-519	SIGN PANELS REMOVE	5	each	$50.00	$250.00	$200.00	$1,000.00	$12.00	$60.00
PNC2117271B1--01-520	SIGN FLASHING BEACON GROUND MOUNT	1	each	$2,000.00	$2,000.00	$350.00	$350.00	$6,900.00	$6,900.00
PNC2117271B1--01-521	SIGN FLASHING BEACON OVERHEAD MOUNT	1	each	$1,600.00	$1,600.00	$700.00	$700.00	$5,800.00	$5,800.00
PNC2117271B1--01-522	OBJECT MARKER TYPE 1	5	each	$60.00	$300.00	$200.00	$1,000.00	$170.00	$850.00
PNC2117271B1--01-523	OBJECT MARKER TYPE 2	5	each	$60.00	$300.00	$200.00	$1,000.00	$175.00	$875.00
PNC2117271B1--01-524	OBJECT MARKER TYPE 3	5	each	$60.00	$300.00	$180.00	$900.00	$240.00	$1,200.00
PNC2117271B1--01-525	OBJECT MARKER TYPE 4	5	each	$60.00	$300.00	$180.00	$900.00	$280.00	$1,400.00
PNC2117271B1--01-526	DELINEATOR FLEXIBLE TUBULAR	5	each	$35.00	$175.00	$125.00	$625.00	$110.00	$550.00
PNC2117271B1--01-527	DELINEATOR NON-FLEXIBLE	5	each	$25.00	$125.00	$125.00	$625.00	$120.00	$600.00
PNC2117271B1--01-528	DELINEATOR FLEXIBLE HIGH VISIBILITY MEDIAN	5	each	$85.00	$425.00	$160.00	$800.00	$200.00	$1,000.00
PNC2117271B1--01-529	DELINEATOR FLEXIBLE HIGH PERFORMANCE 48	5	each	$85.00	$425.00	$180.00	$900.00	$200.00	$1,000.00
PNC2117271B1--01-530	RETRO-REFLECTIVE PAVEMENT MARKERS	1000	each	$12.00	$12,000.00	$6.00	$6,000.00	$5.00	$5,000.00
PNC2117271B1--01-531	PAINTED PAVEMENT MARKINGS STANDARD WHITE YELLOW OR BLUE SOLI	35000	linear foot	$2.50	$87,500.00	$0.50	$17,500.00	$2.00	$70,000.00
PNC2117271B1--01-532	PAINTED PAVEMENT MARKINGS STANDARD WHITE OR YELLOW SOLID 8	1500	linear foot	$2.75	$4,125.00	$1.75	$2,625.00	$2.50	$3,750.00
PNC2117271B1--01-533	PAINTED PAVEMENT MARKINGS STANDARD WHITE OR YELLOW SOLID FOR	1500	linear foot	$3.00	$4,500.00	$3.00	$4,500.00	$3.00	$4,500.00
PNC2117271B1--01-534	PAINTED PAVEMENT MARKINGS STANDARD WHITE OR YELLOW SOLID FOR	150	linear foot	$3.50	$525.00	$4.00	$600.00	$3.50	$525.00
PNC2117271B1--01-535	PAINTED PAVEMENT MARKINGS STANDARD WHITE OR YELLOW SOLID FOR	1000	linear foot	$4.00	$4,000.00	$5.00	$5,000.00	$4.00	$4,000.00
PNC2117271B1--01-536	PAINTED PAVEMENT MARKINGS STANDARD WHITE OR YELLOW SKIP 10-30	3000	linear foot	$3.00	$9,000.00	$0.50	$1,500.00	$3.00	$9,000.00
PNC2117271B1--01-537	PAINTED PAVEMENT MARKINGS STANDARD WHITE MESSAGE OR SYMBOL	5	each	$300.00	$1,500.00	$100.00	$500.00	$150.00	$750.00
PNC2117271B1--01-538	PAINTED PAVEMENT MARKINGS STANDARD WHITE ARROWS	100	each	$300.00	$30,000.00	$45.00	$4,500.00	$75.00	$7,500.00
PNC2117271B1--01-539	PAINTED PAVEMENT MARKINGS STANDARD WHITE YIELD LINE	50	linear foot	$2.00	$100.00	$1.50	$75.00	$8.00	$400.00
PNC2117271B1--01-540	PAINTED PAVEMENT MARKINGS STANDARD WHITE OR YELLOW ISLAND NO	50	square foo	$5.00	$250.00	$1.50	$75.00	$5.00	$250.00
PNC2117271B1--01-541	PAINTED PAVEMENT MARKINGS STANDARD BLACK SOLID 6	100	linear foot	$0.50	$50.00	$1.00	$100.00	$1.50	$150.00
PNC2117271B1--01-542	PAINTED PAVEMENT MARKINGS STANDARD BLACK SKIP 6	100	linear foot	$0.50	$50.00	$1.00	$100.00	$1.50	$150.00
PNC2117271B1--01-543	PAINTED PAVEMENT MARKINGS STANDARD BLUE MESSAGE	5	each	$50.00	$250.00	$120.00	$600.00	$75.00	$375.00
PNC2117271B1--01-544	THERMOPLASTIC STANDARD WHITE SOLID 6	35000	linear foot	$2.75	$96,250.00	$1.00	$35,000.00	$3.00	$105,000.00
PNC2117271B1--01-545	THERMOPLASTIC STANDARD WHITE SOLID 8	3000	linear foot	$3.25	$9,750.00	$1.40	$4,200.00	$4.00	$12,000.00
PNC2117271B1--01-546	THERMOPLASTIC STANDARD WHITE SOLID FOR CROSSWALK AND ROUNDA	3500	linear foot	$4.00	$14,000.00	$1.90	$6,650.00	$5.00	$17,500.00
PNC2117271B1--01-547	THERMOPLASTIC STANDARD WHITE OR YELLOW SOLID FOR DIAGONAL OR	500	linear foot	$4.50	$2,250.00	$3.00	$1,500.00	$6.00	$3,000.00
PNC2117271B1--01-548	THERMOPLASTIC STANDARD WHITE SOLID FOR STOP LINE OR CROSSWALK	1200	linear foot	$5.00	$6,000.00	$3.50	$4,200.00	$7.00	$8,400.00
PNC2117271B1--01-549	THERMOPLASTIC STANDARD WHITE OR YELLOW SKIP 10-30 OR 3-9 SKIP 6	5000	linear foot	$3.00	$15,000.00	$1.00	$5,000.00	$3.00	$15,000.00
PNC2117271B1--01-550	THERMOPLASTIC STANDARD WHITE DOTTED/GUIDELINE / 6-10 GAP EXTEN	500	linear foot	$2.00	$1,000.00	$1.00	$500.00	$3.00	$1,500.00
PNC2117271B1--01-551	THERMOPLASTIC STANDARD WHITE MESSAGE OR SYMBOL	10	each	$175.00	$1,750.00	$130.00	$1,300.00	$200.00	$2,000.00
PNC2117271B1--01-552	THERMOPLASTIC STANDARD WHITE ARROW	100	each	$250.00	$25,000.00	$100.00	$10,000.00	$300.00	$30,000.00
PNC2117271B1--01-553	THERMOPLASTIC STANDARD BLUE SOLID 6	30	linear foot	$2.00	$60.00	$10.00	$300.00	$6.00	$180.00
PNC2117271B1--01-554	THERMOPLASTIC STANDARD BLUE MESSAGE	5	each	$35.00	$175.00	$190.00	$950.00	$90.00	$450.00
PNC2117271B1--01-555	THERMOPLASTIC REMOVE EXISTING THERMOPLASTIC PAVEMENT MARKIN	3500	square foo	$7.00	$24,500.00	$10.00	$35,000.00	$7.00	$24,500.00
PNC2117271B1--01-556	MINIMUM CHARGE FOR STRIPING FOR EACH PROJECT	5	each	$2,000.00	$10,000.00	$1,000.00	$5,000.00	$1,500.00	$7,500.00
PNC2117271B1--01-557	LIGHTING CONDUCTORS INSULATED NO. 10 OR SMALLER	100	linear foot	$6.00	$600.00	$2.00	$200.00	$7.00	$700.00
PNC2117271B1--01-558	LIGHTING CONDUCTORS INSULATED NO. 8 TO NO. 6	100	linear foot	$6.25	$625.00	$3.00	$300.00	$8.00	$800.00
PNC2117271B1--01-559	LIGHTING CONDUCTORS INSULATED NO. 4 TO NO. 2	100	linear foot	$11.00	$1,100.00	$6.00	$600.00	$9.00	$900.00
PNC2117271B1--01-560	LIGHTING CONDUCTORS INSULATED NO. 1 TO NO. 0	100	linear foot	$13.00	$1,300.00	$6.00	$600.00	$10.00	$1,000.00
PNC2117271B1--01-561	LIGHTING CONDUCTORS PLACE OUT OF SERVICE	100	linear foot	$3.00	$300.00	$2.00	$200.00	$2.00	$200.00
PNC2117271B1--01-562	LIGHT POLE COMPLETE SPECIAL FOUNDATION WIND SPEED 150 POLE HEI	1	each	$3,000.00	$3,000.00	$4,000.00	$4,000.00	$2,500.00	$2,500.00
PNC2117271B1--01-563	LIGHT POLE COMPLETE SPECIAL FOUNDATION WIND SPEED 150 POLE HEI	1	each	$3,250.00	$3,250.00	$5,000.00	$5,000.00	$3,000.00	$3,000.00
PNC2117271B1--01-564	LIGHT POLE COMPLETE SPECIAL FOUNDATION WIND SPEED 150 POLE HEI	1	each	$3,500.00	$3,500.00	$6,600.00	$6,600.00	$4,000.00	$4,000.00
PNC2117271B1--01-565	LIGHT POLE COMPLETE WIND SPEED 150 POLE HEIGHT 40	1	each	$2,500.00	$2,500.00	$4,200.00	$4,200.00	$2,500.00	$2,500.00
PNC2117271B1--01-566	LIGHT POLE COMPLETE WIND SPEED 150 POLE HEIGHT 45	1	each	$2,750.00	$2,750.00	$4,800.00	$4,800.00	$3,000.00	$3,000.00
PNC2117271B1--01-567	LIGHT POLE COMPLETE WIND SPEED 150 POLE HEIGHT 50	1	each	$3,000.00	$3,000.00	$6,500.00	$6,500.00	$4,000.00	$4,000.00
PNC2117271B1--01-568	LIGHT POLE COMPLETE RELOCATE	1	each	$1,000.00	$1,000.00	$1,800.00	$1,800.00	$2,500.00	$2,500.00
PNC2117271B1--01-569	LIGHT POLE COMPLETE REMOVE	1	each	$600.00	$600.00	$1,500.00	$1,500.00	$1,000.00	$1,000.00
PNC2117271B1--01-570	LOAD CENTER SECONDARY VOLTAGE	1	each	$7,500.00	$7,500.00	$8,500.00	$8,500.00	$14,000.00	$14,000.00
PNC2117271B1--01-571	GROUND ROD	20	linear foot	$35.00	$700.00	$10.00	$200.00	$25.00	$500.00
PNC2117271B1--01-572	UTILITY PIPE PVC CASING/CONDUIT 0-6	100	linear foot	$15.00	$1,500.00	$43.00	$4,300.00	$23.00	$2,300.00
PNC2117271B1--01-573	UTILITY PIPE DI/CI WATER / SEWER 5- 7.9	5	linear foot	$225.00	$1,125.00	$240.00	$1,200.00	$290.00	$1,450.00
PNC2117271B1--01-574	UTILITY PIPE DI/CI WATER / SEWER 8 - 19.9	5	linear foot	$475.00	$2,375.00	$285.00	$1,425.00	$320.00	$1,600.00
PNC2117271B1--01-575	UTILITY PIPE DI/CI WATER / SEWER 20- 49.9	5	linear foot	$700.00	$3,500.00	$460.00	$2,300.00	$350.00	$1,750.00
PNC2117271B1--01-576	UTILITY PIPE REMOVE & DISPOSE 5-7.9	20	linear foot	$15.00	$300.00	$38.00	$760.00	$15.00	$300.00
PNC2117271B1--01-577	UTILITY PIPE REMOVE & DISPOSE 8-19.9	20	linear foot	$20.00	$400.00	$67.00	$1,340.00	$20.00	$400.00
PNC2117271B1--01-578	UTILITY PIPE REMOVE & DISPOSE 20-49.9	20	linear foot	$25.00	$500.00	$98.00	$1,960.00	$40.00	$800.00
PNC2117271B1--01-579	UTILITY FITTINGS DI/CI CAP/PLUG 5 - 7.9	5	each	$250.00	$1,250.00	$275.00	$1,375.00	$1,000.00	$5,000.00
PNC2117271B1--01-580	UTILITY FITTINGS DI/CI CAP/PLUG 8 - 19.9	5	each	$450.00	$2,250.00	$400.00	$2,000.00	$1,000.00	$5,000.00
PNC2117271B1--01-581	UTILITY FITTINGS DI/CI CAP/PLUG 20 - 49.9	5	each	$500.00	$2,500.00	$375.00	$1,875.00	$2,500.00	$12,500.00
PNC2117271B1--01-582	UTILITY FITTINGS REMOVE & DISPOSAL	5	each	$25.00	$125.00	$400.00	$2,000.00	$100.00	$500.00
PNC2117271B1--01-583	UTILITY FIXTURES 0 - 1.9 VALVE ASSEMBLY	5	each	$50.00	$250.00	$500.00	$2,500.00	$300.00	$1,500.00
PNC2117271B1--01-584	UTILITY FIXTURES 5.0 - 7.9 TAPPING SADDLE/SLEEVE	2	each	$700.00	$1,400.00	$4,900.00	$9,800.00	$300.00	$600.00
PNC2117271B1--01-585	UTILITY FIXTURES 5.0 - 7.9 VALVE ASSEMBLY	2	each	$1,200.00	$2,400.00	$3,000.00	$6,000.00	$300.00	$600.00
PNC2117271B1--01-586	UTILITY FIXTURES 5.0 - 7.9 VAC/AIR ASSEMBLY	2	each	$100.00	$200.00	$3,000.00	$6,000.00	$300.00	$600.00
PNC2117271B1--01-587	UTILITY FIXTURES 5-7.9 LINE STOP ASSEMBLY	2	each	$250.00	$500.00	$5,375.00	$10,750.00	$300.00	$600.00
PNC2117271B1--01-588	UTILITY FIXTURES 5-7.9 MECHANICAL JOINT RESTRAINT	5	each	$250.00	$1,250.00	$950.00	$4,750.00	$300.00	$1,500.00
PNC2117271B1--01-589	FIRE HYDRANT ADJUST AND MODIFY	1	each	$1,000.00	$1,000.00	$990.00	$990.00	$1,250.00	$1,250.00
PNC2117271B1--01-590	FIRE HYDRANT RELOCATE	1	each	$750.00	$750.00	$3,900.00	$3,900.00	$1,500.00	$1,500.00

Subtotal	**$11,346,782.50**	**$11,545,536.75**	**$13,180,150.00**
Allowances	$700,000.00	$700,000.00	$700,000.00
Total Bid:	**$12,046,782.50**	**$12,245,536.75**	**$13,880,150.00**

5% on Base	$567,339.13
LH - within	$11,914,121.63
5% on total	$602,339.13
LH- within	$12,516,460.75

WEEKLEY ASPHALT PAVING, INC.	First Offer - $3,900.00	1 / each	$3,900.00		Y

Product Code:
Agency Notes:

Supplier Product Code:
Supplier Notes:

Supplier Totals

f DP Development [Ad] $11,346,782.50 **(590/590 items)**

Bid Contact **Marcy Cabanas**
sales@dpdevelopment.net
Ph 954-972-5086
Fax 561-650-1334

Address **2240 NW 22 Street**
Pompano Beach, FL 33069

Qualifications SB

Bid Bond (Status: Authorized on Nov 21, 2018)

Agency Notes:

Supplier Notes:

Head Attch:

Bid Allowance $700,000.00

f WEEKLEY ASPHALT PAVING, INC. $11,545,536.75 **(590/590 items)**

Bid Contact **June Stone**
gail@weekleyasp.com
Ph 954-680-8005
Fax 954-680-8671

Address **20701 STIRLING RD**
PEMBROKE PINES, FL 33332

Bid Bond (Status: Authorized on Nov 7, 2018)

Agency Notes:

Supplier Notes:

Head Attch:

Bid Allowance $700,000.00

f FG Construction, LLC [Ad] $13,180,150.00 **(590/590 items)**

Bid Contact **Khang Nguyen**
khang@adaexperts.com
Ph 954-766-4053

Address **2701 NW 55th Ct**
Tamarac, FL 33309

Qualifications CBE

Agency Notes:

Supplier Notes:

Head Attch:

Bid Allowance $700,000.00

**

6

Bid Tabulation - Best and Final Offer (BAFO) Costs Savings

Solicitation No.: PNC2117271B1
Solicitation Title: General Roadway and Miscellaneous Construction
Using Agency: Highway and Bridge Maintenance Division
Prepared by: Netanya Hogu, Purchasing Agent

Date BAFO Posted: January 24, 2019
Date BAFO Opened: January 31, 2019
Vendors Invited: Two (2)
Responses: One (1)
Declinations: Zero (0)

				Lowest Vendor for BAFO				
				DP Development of the Treasure Coast LLC				
Item Number	**Item Title**	**Quantity**	**Unit**	**Original Unit Price**	**Original Total**	**BAFO Unit Price**	**BAFO Total**	**Difference in BAFO Unit Price and Original Unit Price**
PNC2117271B1--01-01	MOBILIZATION - NIGHT WORK PER PROJECT	10	each	$ 2,500.00	$ 25,000.00	$ 1,000.00	$ 10,000.00	$ (1,500.00)
PNC2117271B1--01-02	MOBILIZATION - MOBILIZE WITHIN 24 HR PER PROJECT	5	each	$ 500.00	$ 2,500.00	$ 500.00	$ 2,500.00	$ -
PNC2117271B1--01-03	MOBILIZATION - MOBILIZE WITHIN 4 HR PER PROJECT	5	each	$ 500.00	$ 2,500.00	$ 500.00	$ 2,500.00	$ -
PNC2117271B1--01-04	COMMERCIAL MATERIAL FOR TEMPORARY DRIVEWAY MAINTENANCE	10	cubic yard	$ 25.00	$ 250.00	$ 25.00	$ 250.00	$ -
PNC2117271B1--01-05	TRAFFIC CONTROL OFFICER	500	hour	$ 80.00	$ 40,000.00	$ 80.00	$ 40,000.00	$ -
PNC2117271B1--01-06	WORK ZONE SIGN	8000	day	$ 7.00	$ 56,000.00	$ 7.00	$ 56,000.00	$ -
PNC2117271B1--01-07	BUSINESS SIGN	5	day	$ 7.00	$ 35.00	$ 7.00	$ 35.00	$ -
PNC2117271B1--01-08	BARRIER WALL TEMPORARY CONCRETE UP TO 30 DAYS	500	linear foot	$ 25.00	$ 12,500.00	$ 25.00	$ 12,500.00	$ -
PNC2117271B1--01-09	BARRIER WALL TEMPORARY WATERFILLED UP TO 30 DAYS	2500	linear foot	$ 60.00	$ 150,000.00	$ 50.00	$ 125,000.00	$ (10.00)
PNC2117271B1--01-10	BARRIER WALL TEMPORARY LOW PROFILE CONCRETE UP TO 30 DAYS	50	linear foot	$ 10.00	$ 500.00	$ 10.00	$ 500.00	$ -
PNC2117271B1--01-11	BARRIER WALL TEMPORARY TYPE K UP TO 30 DAYS	50	linear foot	$ 10.00	$ 500.00	$ 10.00	$ 500.00	$ -
PNC2117271B1--01-12	BARRIER WALL TEMPORARY RELOCATE CONCRETE	2000	linear foot	$ 7.50	$ 15,000.00	$ 7.50	$ 15,000.00	$ -
PNC2117271B1--01-13	BARRIER WALL TEMPORARY RELOCATE WATERFILLED	7000	linear foot	$ 35.00	$ 245,000.00	$ 30.00	$ 210,000.00	$ (5.00)
PNC2117271B1--01-14	BARRIER WALL TEMPORARY RELOCATE LOW PROFILE CONCRETE	50	linear foot	$ 7.50	$ 375.00	$ 7.50	$ 375.00	$ -
PNC2117271B1--01-15	BARRIER WALL TEMPORARY RELOCATE TYPE K	50	linear foot	$ 7.50	$ 375.00	$ 7.50	$ 375.00	$ -
PNC2117271B1--01-16	CHANNELIZING DEVICE TYPES I II DI VP DRUM OR LCD	25000	day	$ 7.00	$ 175,000.00	$ 7.00	$ 175,000.00	$ -
PNC2117271B1--01-17	CHANNELIZING DEVICE TYPE III 6	10	day	$ 7.00	$ 70.00	$ 7.00	$ 70.00	$ -
PNC2117271B1--01-18	CHANNELIZING DEVICE-PEDESTRIAN LCD (LONGITUDINAL CHANNELIZING DEVICE)	1500	day	$ 5.00	$ 7,500.00	$ 5.00	$ 7,500.00	$ -
PNC2117271B1--01-19	TRAFFIC CONES	15000	day	$ 7.00	$ 105,000.00	$ 7.00	$ 105,000.00	$ -
PNC2117271B1--01-20	TUBULAR MARKER	5	day	$ 1.00	$ 5.00	$ 1.00	$ 5.00	$ -
PNC2117271B1--01-21	ARROW BOARD / ADVANCE WARNING ARROW PANEL	500	day	$ 85.00	$ 42,500.00	$ 85.00	$ 42,500.00	$ -
PNC2117271B1--01-22	TEMPORARY RETROREFLECTIVE PAVEMENT MARKER	10	each	$ 5.00	$ 50.00	$ 5.00	$ 50.00	$ -
PNC2117271B1--01-23	TEMPORARY CRASH CUSHION REDIRECTIVE OPTION UP TO 30 DAYS	5	lot	$ 250.00	$ 1,250.00	$ 250.00	$ 1,250.00	$ -
PNC2117271B1--01-24	BARRICADE TYPE III -TO REMAIN 6	500	each	$ 25.00	$ 12,500.00	$ 2.00	$ 1,000.00	$ (23.00)
PNC2117271B1--01-25	PORTABLE CHANGEABLE MESSAGE SIGN TEMPORARY	200	day	$ 120.00	$ 24,000.00	$ 120.00	$ 24,000.00	$ -
PNC2117271B1--01-26	PORTABLE REGULATORY SIGN	5	day	$ 2.50	$ 12.50	$ 2.50	$ 12.50	$ -
PNC2117271B1--01-27	PAVEMENT MARKING REMOVABLE TAPE WHITE-BLACK SKIP	100	linear foot	$ 0.50	$ 50.00	$ 0.50	$ 50.00	$ -
PNC2117271B1--01-28	PAVEMENT MARKING REMOVABLE TAPE WHITE-BLACK SOLID	100	linear foot	$ 0.50	$ 50.00	$ 0.50	$ 50.00	$ -
PNC2117271B1--01-29	PAVEMENT MARKING REMOVABLE TAPE WHITE-BLACK OTHER	100	square foot	$ 0.50	$ 50.00	$ 0.50	$ 50.00	$ -
PNC2117271B1--01-30	PAVEMENT MARKING REMOVABLE TAPE YELLOW SOLID	100	linear foot	$ 0.50	$ 50.00	$ 0.50	$ 50.00	$ -
PNC2117271B1--01-31	LIGHT TOWER AMIDA / TEREX AL4000 OR EQUIVALENT	100	day	$ 300.00	$ 30,000.00	$ 300.00	$ 30,000.00	$ -
PNC2117271B1--01-32	FDOT CERTIFIED FLAG PERSON	3000	hour	$ 60.00	$ 180,000.00	$ 55.00	$ 165,000.00	$ (5.00)
PNC2117271B1--01-33	ORANGE PLASTIC MESH AND POST UP TO 30 DAYS	500	linear foot	$ 5.00	$ 2,500.00	$ 5.00	$ 2,500.00	$ -
PNC2117271B1--01-34	ARTIFICIAL COVERINGS /ROLLED EROSION CONTROL PRODUCTS	50	square yard	$ 6.00	$ 300.00	$ 6.00	$ 300.00	$ -
PNC2117271B1--01-35	SEDIMENT BARRIER	5000	linear foot	$ 3.50	$ 17,500.00	$ 3.50	$ 17,500.00	$ -
PNC2117271B1--01-36	FLOATING TURBIDITY BARRIER	200	linear foot	$ 11.00	$ 2,200.00	$ 11.00	$ 2,200.00	$ -
PNC2117271B1--01-37	STAKED TURBIDITY BARRIER - NYLON REINFORCED PVC	100	linear foot	$ 4.00	$ 400.00	$ 4.00	$ 400.00	$ -
PNC2117271B1--01-38	SOIL TRACKING PREVENTION DEVICE	5	each	$ 75.00	$ 375.00	$ 75.00	$ 375.00	$ -
PNC2117271B1--01-39	INLET PROTECTION SYSTEM	300	each	$ 300.00	$ 90,000.00	$ 200.00	$ 60,000.00	$ (100.00)
PNC2117271B1--01-40	LITTER REMOVAL AND DISPOSAL	5	acre	$ 100.00	$ 500.00	$ 100.00	$ 500.00	$ -
PNC2117271B1--01-41	MOWING LESS THAN 24 INCHES TALL 1 ACRES MINIMUM CHARGE	5	acre	$ 100.00	$ 500.00	$ 100.00	$ 500.00	$ -
PNC2117271B1--01-42	MOWING TALLER THAN 24 INCHES 1 ACRES MINIMUM CHARGE	5	acre	$ 150.00	$ 750.00	$ 150.00	$ 750.00	$ -
PNC2117271B1--01-43	MOWING TRIMMING EDGING WEEDING AND TRASH PICK-UP	10000	square yard	$ 1.00	$ 10,000.00	$ 0.50	$ 5,000.00	$ (0.50)
PNC2117271B1--01-44	SURVEY WORK SIGNED & SEALED DRAWINGS	150	hour	$ 180.00	$ 27,000.00	$ 180.00	$ 27,000.00	$ -
PNC2117271B1--01-45	SURVEY FIELD WORK 3-PERSON CREW	200	hour	$ 180.00	$ 36,000.00	$ 180.00	$ 36,000.00	$ -
PNC2117271B1--01-46	UTILITY LOCATING AND EXCAVATION TEST HOLE 0-4 DEPTH	5	each	$ 850.00	$ 4,250.00	$ 850.00	$ 4,250.00	$ -
PNC2117271B1--01-47	UTILITY LOCATING AND EXCAVATION TEST HOLE 4-8 DEPTH	5	each	$ 850.00	$ 4,250.00	$ 850.00	$ 4,250.00	$ -
PNC2117271B1--01-48	CURB OR CURB AND GUTTER REMOVAL	4000	linear foot	$ 24.00	$ 96,000.00	$ 24.00	$ 96,000.00	$ -
PNC2117271B1--01-49	CONCRETE SIDEWALK AND PAVEMENT REMOVAL	12000	square yard	$ 30.00	$ 360,000.00	$ 30.00	$ 360,000.00	$ -
PNC2117271B1--01-50	REMOVAL OF EXISTING CONCRETE PAVEMENT	1000	square yard	$ 10.00	$ 10,000.00	$ 10.00	$ 10,000.00	$ -
PNC2117271B1--01-51	REMOVAL AND DISPOSAL OF UNSUITABLE NON-CONTAMINATED MATERIALS	150	cubic yard	$ 20.00	$ 3,000.00	$ 20.00	$ 3,000.00	$ -
PNC2117271B1--01-52	REGULAR EXCAVATION	15000	cubic yard	$ 25.00	$ 375,000.00	$ 25.00	$ 375,000.00	$ -
PNC2117271B1--01-53	LATERAL DITCH EXCAVATION	100	cubic yard	$ 4.00	$ 400.00	$ 4.00	$ 400.00	$ -
PNC2117271B1--01-54	SUBSOIL EXCAVATION	100	cubic yard	$ 8.00	$ 800.00	$ 8.00	$ 800.00	$ -
PNC2117271B1--01-55	CHANNEL EXCAVATION	50	cubic yard	$ 35.00	$ 1,750.00	$ 35.00	$ 1,750.00	$ -
PNC2117271B1--01-56	EMBANKMENT	3000	cubic yard	$ 23.00	$ 69,000.00	$ 23.00	$ 69,000.00	$ -
PNC2117271B1--01-57	GRAVEL FILL	50	cubic yard	$ 17.00	$ 850.00	$ 17.00	$ 850.00	$ -
PNC2117271B1--01-58	2" BROWN RIVER ROCK	20	cubic yard	$ 40.00	$ 800.00	$ 40.00	$ 800.00	$ -
PNC2117271B1--01-59	FLOWABLE FILL	1500	cubic yard	$ 215.00	$ 322,500.00	$ 200.00	$ 300,000.00	$ (15.00)
PNC2117271B1--01-60	FLOWABLE FINE GROUT 3000 PSI	20	cubic yard	$ 215.00	$ 4,300.00	$ 215.00	$ 4,300.00	$ -
PNC2117271B1--01-61	FILL SAND	50	cubic yard	$ 20.00	$ 1,000.00	$ 20.00	$ 1,000.00	$ -
PNC2117271B1--01-62	GEOSYNTHETIC REINFORCED SOIL SLOPE	50	square foot	$ 14.00	$ 700.00	$ 14.00	$ 700.00	$ -
PNC2117271B1--01-63	TYPE B STABILIZATION	5000	square yard	$ 15.00	$ 75,000.00	$ 15.00	$ 75,000.00	$ -
PNC2117271B1--01-64	PREPARE SOIL LAYER FINISH SOIL LAYER 6"	100	square yard	$ 4.00	$ 400.00	$ 4.00	$ 400.00	$ -
PNC2117271B1--01-65	PREPARED SOIL LAYER ORGANIC SOIL LAYER 6	100	square yard	$ 5.00	$ 500.00	$ 5.00	$ 500.00	$ -
PNC2117271B1--01-66	REWORKING LIMEROCK BASE 6	30	square yard	$ 5.00	$ 150.00	$ 5.00	$ 150.00	$ -
PNC2117271B1--01-67	REWORKING LIMEROCK BASE 4	20	square yard	$ 5.00	$ 100.00	$ 5.00	$ 100.00	$ -
PNC2117271B1--01-68	REWORKING LIMEROCK BASE 3	20	square yard	$ 5.00	$ 100.00	$ 5.00	$ 100.00	$ -
PNC2117271B1--01-69	LIMEROCK NEW MATERIAL FOR REWORKING BASE	20	cubic yard	$ 35.00	$ 700.00	$ 35.00	$ 700.00	$ -
PNC2117271B1--01-70	OPTIONAL BASE BASE GROUP 03	2000	square yard	$ 3.00	$ 6,000.00	$ 3.00	$ 6,000.00	$ -
PNC2117271B1--01-71	OPTIONAL BASE BASE GROUP 04	2000	square yard	$ 3.50	$ 7,000.00	$ 3.50	$ 7,000.00	$ -
PNC2117271B1--01-72	OPTIONAL BASE BASE GROUP 05	2000	square yard	$ 4.00	$ 8,000.00	$ 4.00	$ 8,000.00	$ -
PNC2117271B1--01-73	OPTIONAL BASE BASE GROUP 06	2000	square yard	$ 20.00	$ 40,000.00	$ 20.00	$ 40,000.00	$ -
PNC2117271B1--01-74	OPTIONAL BASE BASE GROUP 07	2000	square yard	$ 4.75	$ 9,500.00	$ 4.75	$ 9,500.00	$ -
PNC2117271B1--01-75	OPTIONAL BASE BASE GROUP 08	2000	square yard	$ 6.00	$ 12,000.00	$ 6.00	$ 12,000.00	$ -
PNC2117271B1--01-76	OPTIONAL BASE BASE GROUP 09	2000	square yard	$ 14.00	$ 28,000.00	$ 14.00	$ 28,000.00	$ -
PNC2117271B1--01-77	OPTIONAL BASE BASE GROUP 10	2000	square yard	$ 11.00	$ 22,000.00	$ 11.00	$ 22,000.00	$ -
PNC2117271B1--01-78	OPTIONAL BASE BASE GROUP 11	8000	square yard	$ 25.00	$ 200,000.00	$ 25.00	$ 200,000.00	$ -
PNC2117271B1--01-79	OPTIONAL BASE BASE GROUP 12	2000	square yard	$ 15.00	$ 30,000.00	$ 15.00	$ 30,000.00	$ -
PNC2117271B1--01-80	OPTIONAL BASE BASE GROUP 13	2000	square yard	$ 17.00	$ 34,000.00	$ 17.00	$ 34,000.00	$ -
PNC2117271B1--01-81	OPTIONAL BASE BASE GROUP 14	2000	square yard	$ 19.00	$ 38,000.00	$ 19.00	$ 38,000.00	$ -
PNC2117271B1--01-82	OPTIONAL BASE BASE GROUP 15	2000	square yard	$ 21.00	$ 42,000.00	$ 21.00	$ 42,000.00	$ -
PNC2117271B1--01-83	OPTIONAL BASE BASE GROUP 15 ASPHALT BASE OPTION ONLY	2000	square yard	$ 23.00	$ 46,000.00	$ 23.00	$ 46,000.00	$ -
PNC2117271B1--01-84	TURNOUT CONSTRUCTION	200	square yard	$ 10.00	$ 2,000.00	$ 10.00	$ 2,000.00	$ -
PNC2117271B1--01-85	CEMENT TREATED PERMEABLE BASE	20	cubic yard	$ 21.00	$ 420.00	$ 21.00	$ 420.00	$ -
PNC2117271B1--01-86	MILLING EXIST ASPH PAVT 1 AVG DEPTH AREA	12000	square yard	$ 4.00	$ 48,000.00	$ 4.00	$ 48,000.00	$ -
PNC2117271B1--01-87	MILLING EXIST ASPH PAVT 3 AVG DEPTH	1200	square yard	$ 5.00	$ 6,000.00	$ 5.00	$ 6,000.00	$ -
PNC2117271B1--01-88	MILLING EXIST ASPH PAVT 2 AVG DEPTH AREA	1000	square yard	$ 5.00	$ 5,000.00	$ 5.00	$ 5,000.00	$ -
PNC2117271B1--01-89	MILLING EXIST ASPH PAVT 1 1/2 AVG DEPTH AREA	1000	square yard	$ 5.00	$ 5,000.00	$ 5.00	$ 5,000.00	$ -
PNC2117271B1--01-90	MILLING EXIST ASPH PAVT 2 1/2 AVG DEPTH	1000	square yard	$ 5.00	$ 5,000.00	$ 5.00	$ 5,000.00	$ -
PNC2117271B1--01-91	MILLING EXIST ASPH PAVT 1/2 AVG DEPTH	500	square yard	$ 5.00	$ 2,500.00	$ 5.00	$ 2,500.00	$ -
PNC2117271B1--01-92	MILLING EXIST ASPH PAVT 3/4 AVG DEPTH	500	square yard	$ 5.00	$ 2,500.00	$ 5.00	$ 2,500.00	$ -
PNC2117271B1--01-93	TYPE S ASPHALTIC CONCRETE	50	ton	$ 180.00	$ 9,000.00	$ 180.00	$ 9,000.00	$ -
PNC2117271B1--01-94	TEMPORARY PATCH USING COLD ASPHALTIC MIX	50	cubic foot	$ 50.00	$ 2,500.00	$ 50.00	$ 2,500.00	$ -

Bid Tabulation - Best and Final Offer (BAFO) Costs Savings

Solicitation No.: PNC2117271B1
Solicitation Title: General Roadway and Miscellaneous Construction
Using Agency: Highway and Bridge Maintenance Division
Prepared by: Netanya Hogu, Purchasing Agent

Date BAFO Posted: January 24, 2019
Date BAFO Opened: January 31, 2019
Vendors Invited: Two (2)
Responses: One (1)
Declinations: Zero (0)

				Lowest Vendor for BAFO				
				DP Development of the Treasure Coast LLC				
Item Number	Item Title	Quantity	Unit	Original Unit Price	Original Total	BAFO Unit Price	BAFO Total	Difference in BAFO Unit Price and Original Unit Price
PNC2117271B1--01-95	SUPERPAVE ASPHALTIC CONCRETE TRAFFIC A B C D OR E LESS THAN 100 TON	1500	ton	$ 190.00	$ 285,000.00	$ 190.00	$ 285,000.00	$ -
PNC2117271B1--01-96	SUPERPAVE ASPHALTIC CONCRETE TRAFFIC A B C D OR E 101 to 500 TON	1500	ton	$ 190.00	$ 285,000.00	$ 190.00	$ 285,000.00	$ -
PNC2117271B1--01-97	SUPERPAVE ASPHALTIC CONCRETE TRAFFIC A B C D OR E GREATER THAN OR EQUAL TO	1500	ton	$ 190.00	$ 285,000.00	$ 190.00	$ 285,000.00	$ -
PNC2117271B1--01-98	SUPERPAVE ASPHALTIC CONCRETE TRAFFIC B C D OR E PG76-22 PMA	50	ton	$ 150.00	$ 7,500.00	$ 150.00	$ 7,500.00	$ -
PNC2117271B1--01-99	ASPHALT CONCRETE FRICTION COURSE TRAFFIC B C OR D FC-9.5 OR 12.5 PG 76-22	50	ton	$ 200.00	$ 10,000.00	$ 200.00	$ 10,000.00	$ -
PNC2117271B1--01-100	ASPHALT CONCRETE FRICTION COURSE TRAFFIC B OR C FC-9.5 OR 12.5 PG 76-22 ARB	50	ton	$ 250.00	$ 12,500.00	$ 250.00	$ 12,500.00	$ -
PNC2117271B1--01-101	MISCELLANEOUS ASPHALT PAVEMENT	100	ton	$ 160.00	$ 16,000.00	$ 160.00	$ 16,000.00	$ -
PNC2117271B1--01-102	CLEANING AND SEALING JOINTS- CONCRETE PAVEMENT	100	linear foot	$ 1.50	$ 150.00	$ 1.50	$ 150.00	$ -
PNC2117271B1--01-103	CLEANING AND SEALING RANDOM CRACKS-EXISTING CONCRETE PAVEMENT	100	linear foot	$ 3.00	$ 300.00	$ 3.00	$ 300.00	$ -
PNC2117271B1--01-104	GRINDING CONCRETE PAVEMENT	100	square yard	$ 3.00	$ 300.00	$ 3.00	$ 300.00	$ -
PNC2117271B1--01-105	CONCRETE CLASS NS GRAVITY WALL	150	cubic yard	$ 65.00	$ 9,750.00	$ 50.00	$ 7,500.00	$ (15.00)
PNC2117271B1--01-106	CONCRETE CLASS I ENDWALLS	100	cubic yard	$ 65.00	$ 6,500.00	$ 50.00	$ 5,000.00	$ (15.00)
PNC2117271B1--01-107	CONCRETE CLASS I RETAINING WALLS	120	cubic yard	$ 65.00	$ 7,800.00	$ 50.00	$ 6,000.00	$ (15.00)
PNC2117271B1--01-108	CONCRETE CLASS I MASS SUBSTRUCTURE	150	cubic yard	$ 65.00	$ 9,750.00	$ 50.00	$ 7,500.00	$ (15.00)
PNC2117271B1--01-109	CONCRETE CLASS I	50	cubic yard	$ 65.00	$ 3,250.00	$ 50.00	$ 2,500.00	$ (15.00)
PNC2117271B1--01-110	CONCRETE CLASS II CULVERTS	120	cubic yard	$ 65.00	$ 7,800.00	$ 50.00	$ 6,000.00	$ (15.00)
PNC2117271B1--01-111	CONCRETE CLASS II ENDWALLS	120	cubic yard	$ 65.00	$ 7,800.00	$ 50.00	$ 6,000.00	$ (15.00)
PNC2117271B1--01-112	CONCRETE CLASS II SUPERSTRUCTURE SUBSTRUCTURE BULKHEAD APPROACH SLABS TRENC	110	cubic yard	$ 65.00	$ 7,150.00	$ 50.00	$ 5,500.00	$ (15.00)
PNC2117271B1--01-113	CONCRETE CLASS II RETAINING WALLS	120	cubic yard	$ 65.00	$ 7,800.00	$ 50.00	$ 6,000.00	$ (15.00)
PNC2117271B1--01-114	CONCRETE CLASS II	120	cubic yard	$ 65.00	$ 7,800.00	$ 50.00	$ 6,000.00	$ (15.00)
PNC2117271B1--01-115	CONCRETE CLASS III	120	cubic yard	$ 65.00	$ 7,800.00	$ 50.00	$ 6,000.00	$ (15.00)
PNC2117271B1--01-116	CONCRETE CLASS IV	120	cubic yard	$ 65.00	$ 7,800.00	$ 50.00	$ 6,000.00	$ (15.00)
PNC2117271B1--01-117	CONCRETE CLASS IV BULKHEAD	120	cubic yard	$ 65.00	$ 7,800.00	$ 50.00	$ 6,000.00	$ (15.00)
PNC2117271B1--01-118	CONCRETE CLASS V	120	cubic yard	$ 65.00	$ 7,800.00	$ 50.00	$ 6,000.00	$ (15.00)
PNC2117271B1--01-119	CONCRETE CLASS VI	120	cubic yard	$ 65.00	$ 7,800.00	$ 50.00	$ 6,000.00	$ (15.00)
PNC2117271B1--01-120	CONCRETE FOR JOINT REPAIRS	5	cubic yard	$ 65.00	$ 325.00	$ 50.00	$ 250.00	$ (15.00)
PNC2117271B1--01-121	EPOXY CONCRETE OVERLAY- STRUCTURES REHAB	5	square yard	$ 100.00	$ 500.00	$ 100.00	$ 500.00	$ -
PNC2117271B1--01-122	RESTORE SPALLED AREAS EPOXY	5	cubic foot	$ 100.00	$ 500.00	$ 100.00	$ 500.00	$ -
PNC2117271B1--01-123	EPOXY MATERIAL FOR CRACK INJECTION- STRUCTURES REHAB	5	gallon	$ 150.00	$ 750.00	$ 150.00	$ 750.00	$ -
PNC2117271B1--01-124	CRACKS INJECT AND SEAL- STRUCTURES REHAB	100	linear foot	$ 50.00	$ 5,000.00	$ 50.00	$ 5,000.00	$ -
PNC2117271B1--01-125	CONCRETE SEAWALL SURFACES CLEANING (PRESSURE WASH) BELOW WATER 10000 PSI 4 HR	10	hour	$ 50.00	$ 500.00	$ 50.00	$ 500.00	$ -
PNC2117271B1--01-126	CONCRETE (SIDEWALK CURB GUTTER) SURFACES CLEANING (PRESSURE WASH)	500	square yard	$ 1.00	$ 500.00	$ 1.00	$ 500.00	$ -
PNC2117271B1--01-127	REINFORCING STEEL	2000	pound	$ 5.00	$ 10,000.00	$ 5.00	$ 10,000.00	$ -
PNC2117271B1--01-128	REINFORCING STEEL SUPERSTRUCTURE AND SUBSTRUCTURE	100	pound	$ 5.00	$ 500.00	$ 5.00	$ 500.00	$ -
PNC2117271B1--01-129	INLETS CURB TYPE 9 <10	5	each	$ 750.00	$ 3,750.00	$ 650.00	$ 3,250.00	$ (100.00)
PNC2117271B1--01-130	INLETS CURB TYPE 9 PARTIAL	5	each	$ 500.00	$ 2,500.00	$ 500.00	$ 2,500.00	$ -
PNC2117271B1--01-131	INLETS CURB TYPE 10 <10	5	each	$ 750.00	$ 3,750.00	$ 650.00	$ 3,250.00	$ (100.00)
PNC2117271B1--01-132	INLETS CURB TYPE 10 PARTIAL	5	each	$ 500.00	$ 2,500.00	$ 500.00	$ 2,500.00	$ -
PNC2117271B1--01-133	INLETS CURB TYPE P-1 <10	5	each	$ 750.00	$ 3,750.00	$ 650.00	$ 3,250.00	$ (100.00)
PNC2117271B1--01-134	INLETS CURB TYPE P-1 PARTIAL	5	each	$ 500.00	$ 2,500.00	$ 500.00	$ 2,500.00	$ -
PNC2117271B1--01-135	INLETS CURB TYPE P-2 <10	5	each	$ 750.00	$ 3,750.00	$ 650.00	$ 3,250.00	$ (100.00)
PNC2117271B1--01-136	INLETS CURB TYPE P-2 >10	5	each	$ 750.00	$ 3,750.00	$ 650.00	$ 3,250.00	$ (100.00)
PNC2117271B1--01-137	INLETS CURB TYPE P-2 PARTIAL	5	each	$ 500.00	$ 2,500.00	$ 500.00	$ 2,500.00	$ -
PNC2117271B1--01-138	INLETS CURB TYPE P-3 <10	5	each	$ 750.00	$ 3,750.00	$ 650.00	$ 3,250.00	$ (100.00)
PNC2117271B1--01-139	INLETS CURB TYPE P-3 PARTIAL	5	each	$ 500.00	$ 2,500.00	$ 500.00	$ 2,500.00	$ -
PNC2117271B1--01-140	INLETS CURB TYPE P-4 <10	5	each	$ 750.00	$ 3,750.00	$ 650.00	$ 3,250.00	$ (100.00)
PNC2117271B1--01-141	INLETS CURB TYPE P-4 PARTIAL	5	each	$ 500.00	$ 2,500.00	$ 500.00	$ 2,500.00	$ -
PNC2117271B1--01-142	INLETS CURB TYPE P-5 <10	5	each	$ 750.00	$ 3,750.00	$ 650.00	$ 3,250.00	$ (100.00)
PNC2117271B1--01-143	INLETS CURB TYPE P-5 >10	5	each	$ 750.00	$ 3,750.00	$ 650.00	$ 3,250.00	$ (100.00)
PNC2117271B1--01-144	INLETS CURB TYPE P-5 PARTIAL	5	each	$ 750.00	$ 3,750.00	$ 650.00	$ 3,250.00	$ (100.00)
PNC2117271B1--01-145	INLETS CURB TYPE P-6 <10	5	each	$ 750.00	$ 3,750.00	$ 650.00	$ 3,250.00	$ (100.00)
PNC2117271B1--01-146	INLETS CURB TYPE P-6 >10	5	each	$ 750.00	$ 3,750.00	$ 650.00	$ 3,250.00	$ (100.00)
PNC2117271B1--01-147	INLETS CURB TYPE P-6 PARTIAL	5	each	$ 750.00	$ 3,750.00	$ 650.00	$ 3,250.00	$ (100.00)
PNC2117271B1--01-148	INLETS CURB TYPE 7 <10	5	each	$ 750.00	$ 3,750.00	$ 650.00	$ 3,250.00	$ (100.00)
PNC2117271B1--01-149	INLETS CURB TYPE 7 PARTIAL	5	each	$ 500.00	$ 2,500.00	$ 500.00	$ 2,500.00	$ -
PNC2117271B1--01-150	INLETS CURB TYPE 8 <10	5	each	$ 750.00	$ 3,750.00	$ 650.00	$ 3,250.00	$ (100.00)
PNC2117271B1--01-151	INLETS CURB TYPE 8 PARTIAL	5	each	$ 500.00	$ 2,500.00	$ 500.00	$ 2,500.00	$ -
PNC2117271B1--01-152	INLETS DITCH BOTTOM TYPE A <10	5	each	$ 750.00	$ 3,750.00	$ 650.00	$ 3,250.00	$ (100.00)
PNC2117271B1--01-153	INLETS DITCH BOTTOM TYPE B <10	5	each	$ 750.00	$ 3,750.00	$ 650.00	$ 3,250.00	$ (100.00)
PNC2117271B1--01-154	INLETS DITCH BOTTOM TYPE B >10	5	each	$ 750.00	$ 3,750.00	$ 650.00	$ 3,250.00	$ (100.00)
PNC2117271B1--01-155	INLETS DITCH BOTTOM TYPE B J BOT <10	5	each	$ 750.00	$ 3,750.00	$ 650.00	$ 3,250.00	$ (100.00)
PNC2117271B1--01-156	INLETS DITCH BOTTOM TYPE B PARTIAL	5	each	$ 500.00	$ 2,500.00	$ 500.00	$ 2,500.00	$ -
PNC2117271B1--01-157	INLETS DITCH BOTTOM TYPE C <10	5	each	$ 750.00	$ 3,750.00	$ 650.00	$ 3,250.00	$ (100.00)
PNC2117271B1--01-158	INLETS DITCH BOTTOM TYPE C >10	5	each	$ 750.00	$ 3,750.00	$ 650.00	$ 3,250.00	$ (100.00)
PNC2117271B1--01-159	INLETS DITCH BOTTOM TYPE C PARTIAL	5	each	$ 500.00	$ 2,500.00	$ 500.00	$ 2,500.00	$ -
PNC2117271B1--01-160	INLETS DITCH BOTTOM TYPE C MODIFIED- BACK OF SIDEWALK <10	5	each	$ 750.00	$ 3,750.00	$ 650.00	$ 3,250.00	$ (100.00)
PNC2117271B1--01-161	INLETS DITCH BOTTOM TYPE D <10	5	each	$ 750.00	$ 3,750.00	$ 650.00	$ 3,250.00	$ (100.00)
PNC2117271B1--01-162	INLETS DITCH BOTTOM TYPE E <10	5	each	$ 750.00	$ 3,750.00	$ 650.00	$ 3,250.00	$ (100.00)
PNC2117271B1--01-163	INLETS DITCH BOTTOM TYPE H <10	5	each	$ 750.00	$ 3,750.00	$ 650.00	$ 3,250.00	$ (100.00)
PNC2117271B1--01-164	INLETS GUTTER TYPE S <10	5	each	$ 750.00	$ 3,750.00	$ 650.00	$ 3,250.00	$ (100.00)
PNC2117271B1--01-165	INLETS GUTTER TYPE S J BOTTOM <10	5	each	$ 750.00	$ 3,750.00	$ 650.00	$ 3,250.00	$ (100.00)
PNC2117271B1--01-166	INLETS GUTTER TYPE S PARTIAL	5	each	$ 750.00	$ 3,750.00	$ 650.00	$ 3,250.00	$ (100.00)
PNC2117271B1--01-167	INLETS GUTTER TYPE V <10	5	each	$ 750.00	$ 3,750.00	$ 650.00	$ 3,250.00	$ (100.00)
PNC2117271B1--01-168	INLETS GUTTER TYPE V PARTIAL	5	each	$ 750.00	$ 3,750.00	$ 650.00	$ 3,250.00	$ (100.00)
PNC2117271B1--01-169	INLETS MEDIAN BARRIER TYPE 2 J BOTTOM <10	5	each	$ 750.00	$ 3,750.00	$ 650.00	$ 3,250.00	$ (100.00)
PNC2117271B1--01-170	INLETS MEDIAN BARRIER TYPE 3 J BOTTOM <10	5	each	$ 750.00	$ 3,750.00	$ 650.00	$ 3,250.00	$ (100.00)
PNC2117271B1--01-171	INLETS SPECIAL <10	5	each	$ 500.00	$ 2,500.00	$ 500.00	$ 2,500.00	$ -
PNC2117271B1--01-172	INLETS CLOSED FLUME	5	each	$ 750.00	$ 3,750.00	$ 650.00	$ 3,250.00	$ (100.00)
PNC2117271B1--01-173	MANHOLES P-7 <10	5	each	$ 750.00	$ 3,750.00	$ 650.00	$ 3,250.00	$ (100.00)
PNC2117271B1--01-174	MANHOLES P-7 PARTIAL	5	each	$ 100.00	$ 500.00	$ 100.00	$ 500.00	$ -
PNC2117271B1--01-175	MANHOLES P-8 <10	5	each	$ 750.00	$ 3,750.00	$ 650.00	$ 3,250.00	$ (100.00)
PNC2117271B1--01-176	MANHOLES P-8 PARTIAL	5	each	$ 500.00	$ 2,500.00	$ 500.00	$ 2,500.00	$ -
PNC2117271B1--01-177	MANHOLES J-7 <10	5	each	$ 750.00	$ 3,750.00	$ 650.00	$ 3,250.00	$ (100.00)
PNC2117271B1--01-178	MANHOLES J-7 PARTIAL	5	each	$ 500.00	$ 2,500.00	$ 500.00	$ 2,500.00	$ -
PNC2117271B1--01-179	MANHOLES REPAIR	5	each	$ 750.00	$ 3,750.00	$ 650.00	$ 3,250.00	$ (100.00)
PNC2117271B1--01-180	JUNCTION BOX DRAINAGE P-7 <10	5	each	$ 750.00	$ 3,750.00	$ 650.00	$ 3,250.00	$ (100.00)
PNC2117271B1--01-181	JUNCTION BOX DRAINAGE P-7 PARTIAL	5	each	$ 500.00	$ 2,500.00	$ 500.00	$ 2,500.00	$ -
PNC2117271B1--01-182	JUNCTION BOXES J-7 <10	5	each	$ 750.00	$ 3,750.00	$ 650.00	$ 3,250.00	$ (100.00)
PNC2117271B1--01-183	JUNCTION BOXES DRAINAGE J-7 PARTIAL	5	each	$ 500.00	$ 2,500.00	$ 500.00	$ 2,500.00	$ -
PNC2117271B1--01-184	INLETS ADJUST	5	each	$ 2,500.00	$ 12,500.00	$ 2,500.00	$ 12,500.00	$ -
PNC2117271B1--01-185	MANHOLE ADJUST	10	each	$ 2,600.00	$ 26,000.00	$ 2,600.00	$ 26,000.00	$ -
PNC2117271B1--01-186	MANHOLE ADJUST UTILITIES	5	each	$ 2,000.00	$ 10,000.00	$ 2,000.00	$ 10,000.00	$ -
PNC2117271B1--01-187	VALVE BOXES ADJUST	50	each	$ 1,250.00	$ 62,500.00	$ 800.00	$ 40,000.00	$ (450.00)
PNC2117271B1--01-188	DRAINAGE STRUCTURES MISCELLANEOUS ADJUST	5	each	$ 1,700.00	$ 8,500.00	$ 1,700.00	$ 8,500.00	$ -

Bid Tabulation - Best and Final Offer (BAFO) Costs Savings

Solicitation No.: PNC211727 1B1
Solicitation Title: General Roadway and Miscellaneous Construction
Using Agency: Highway and Bridge Maintenance Division
Prepared by: Netanya Hogu, Purchasing Agent

Date BAFO Posted: January 24, 2019
Date BAFO Opened: January 31, 2019
Vendors Invited: Two (2)
Responses: One (1)
Declinations: Zero (0)

				Lowest Vendor for BAFO				
				DP Development of the Treasure Coast LLC				
Item Number	**Item Title**	**Quantity**	**Unit**	**Original Unit Price**	**Original Total**	**BAFO Unit Price**	**BAFO Total**	**Difference in BAFO Unit Price and Original Unit Price**
PNC211727 1B1--01-189	YARD DRAIN	5	each	$ 200.00	$ 1,000.00	$ 200.00	$ 1,000.00	$ -
PNC211727 1B1--01-190	DRAINAGE STRUCTURE MODIFY	50	each	$ 2,000.00	$ 100,000.00	$ 1,500.00	$ 75,000.00	$ (500.00)
PNC211727 1B1--01-191	INLETS RELOCATING	5	each	$ 200.00	$ 1,000.00	$ 200.00	$ 1,000.00	$ -
PNC211727 1B1--01-192	MANHOLES AND INLETS CLEANING AND SEALING <10	50	each	$ 1,900.00	$ 95,000.00	$ 1,600.00	$ 80,000.00	$ (300.00)
PNC211727 1B1--01-193	MANHOLES AND INLETS CLEANING AND SEALING >10	5	each	$ 1,900.00	$ 9,500.00	$ 1,900.00	$ 9,500.00	$ -
PNC211727 1B1--01-194	REPLACE GRATE	10	each	$ 2,600.00	$ 26,000.00	$ 1,500.00	$ 15,000.00	$ (1,100.00)
PNC211727 1B1--01-195	REPLACEMENT OF AIRCRAFT RATED CATCH BASIN TOP	5	each	$ 5,000.00	$ 25,000.00	$ 4,000.00	$ 20,000.00	$ (1,000.00)
PNC211727 1B1--01-196	PIPE CULVERT OPTIONAL MATERIAL ROUND 12 15 18 24 GUTTER DRAIN	50	linear foot	$ 20.00	$ 1,000.00	$ 20.00	$ 1,000.00	$ -
PNC211727 1B1--01-197	PIPE CULVERT RCP MATERIAL ONLY ROUND 12 15 18 24 GUTTER DRAIN	50	linear foot	$ 30.00	$ 1,500.00	$ 30.00	$ 1,500.00	$ -
PNC211727 1B1--01-198	PIPE CULVERT OPTIONAL MATERIAL ROUND 3036 GUTTER DRAIN	50	linear foot	$ 45.00	$ 2,250.00	$ 45.00	$ 2,250.00	$ -
PNC211727 1B1--01-199	PIPE CULVERT RCP MATERIAL ONLY ROUND 3036 GUTTER DRAIN	50	linear foot	$ 50.00	$ 2,500.00	$ 50.00	$ 2,500.00	$ -
PNC211727 1B1--01-200	PIPE CULVERT OPTIONAL MATERIAL ROUND 4248 GUTTER DRAIN	50	linear foot	$ 75.00	$ 3,750.00	$ 75.00	$ 3,750.00	$ -
PNC211727 1B1--01-201	PIPE CULVERT RCP MATERIAL ONLY ROUND 4248 GUTTER DRAIN	50	linear foot	$ 80.00	$ 4,000.00	$ 80.00	$ 4,000.00	$ -
PNC211727 1B1--01-202	PIPE CULVERT OPTIONAL MATERIAL ROUND 12 15 18 24 SD	50	linear foot	$ 135.00	$ 6,750.00	$ 135.00	$ 6,750.00	$ -
PNC211727 1B1--01-203	PIPE CULVERT RCP MATERIAL ONLY ROUND 12 15 18 24 SD	2000	linear foot	$ 170.00	$ 340,000.00	$ 170.00	$ 340,000.00	$ -
PNC211727 1B1--01-204	PIPE CULVERT OPTIONAL MATERIAL ROUND 3036 SD	200	linear foot	$ 120.00	$ 24,000.00	$ 120.00	$ 24,000.00	$ -
PNC211727 1B1--01-205	PIPE CULVERT RCP MATERIAL ONLY ROUND 3036 SD	20	linear foot	$ 200.00	$ 4,000.00	$ 200.00	$ 4,000.00	$ -
PNC211727 1B1--01-206	PIPE CULVERT OPTIONAL MATERIAL ROUND 4248 SD	10	linear foot	$ 145.00	$ 1,450.00	$ 145.00	$ 1,450.00	$ -
PNC211727 1B1--01-207	PIPE CULVERT RCP MATERIAL ONLY ROUND 4248 SD	20	linear foot	$ 235.00	$ 4,700.00	$ 235.00	$ 4,700.00	$ -
PNC211727 1B1--01-208	PIPE CULVERT OPTIONAL MATERIAL ROUND 5460 SD	20	linear foot	$ 160.00	$ 3,200.00	$ 160.00	$ 3,200.00	$ -
PNC211727 1B1--01-209	PIPE CULVERT RCP MATERIAL ONLY ROUND 5460 SD	20	linear foot	$ 245.00	$ 4,900.00	$ 245.00	$ 4,900.00	$ -
PNC211727 1B1--01-210	PIPE CULVERT OPTIONAL MATERIAL OTHER SHAPE - ELLIP/ARCH 15 18 SD	20	linear foot	$ 10.00	$ 200.00	$ 10.00	$ 200.00	$ -
PNC211727 1B1--01-211	PIPE CULVERT RCP MATERIAL ONLY OTHER SHAPE - ELLIP/ARCH 15 18 SD	100	linear foot	$ 100.00	$ 10,000.00	$ 100.00	$ 10,000.00	$ -
PNC211727 1B1--01-212	PIPE CULVERT OPTIONAL MATERIAL OTHER SHAPE - ELLIP/ARCH 24 SD	100	linear foot	$ 20.00	$ 2,000.00	$ 20.00	$ 2,000.00	$ -
PNC211727 1B1--01-213	PIPE CULVERT RCP MATERIAL ONLY OTHER SHAPE - ELLIP/ARCH 24 SD	50	linear foot	$ 115.00	$ 5,750.00	$ 115.00	$ 5,750.00	$ -
PNC211727 1B1--01-214	PIPE CULVERT OPTIONAL MATERIAL OTHER SHAPE - ELLIP/ARCH 30 36 SD	50	linear foot	$ 40.00	$ 2,000.00	$ 40.00	$ 2,000.00	$ -
PNC211727 1B1--01-215	PIPE CULVERT RCP MATERIAL ONLY OTHER SHAPE - ELLIP/ARCH 30 36 SD	50	linear foot	$ 75.00	$ 3,750.00	$ 75.00	$ 3,750.00	$ -
PNC211727 1B1--01-216	PIPE CULVERT OPTIONAL MATERIAL ROUND 15 18 24 S/CD	50	linear foot	$ 100.00	$ 5,000.00	$ 100.00	$ 5,000.00	$ -
PNC211727 1B1--01-217	PIPE CULVERT RCP CLASS IV ONLY 15 18 24 S/CD	20	linear foot	$ 180.00	$ 3,600.00	$ 180.00	$ 3,600.00	$ -
PNC211727 1B1--01-218	PIPE CULVERT OPT MATERIAL ROUND 30S/CD	20	linear foot	$ 85.00	$ 1,700.00	$ 85.00	$ 1,700.00	$ -
PNC211727 1B1--01-219	PIPE CULVERT RCP CLASS IV ONLY 30S/CD	20	linear foot	$ 175.00	$ 3,500.00	$ 175.00	$ 3,500.00	$ -
PNC211727 1B1--01-220	PIPE CULVERT OPT MATERIAL ROUND 36S/CD	20	linear foot	$ 175.00	$ 3,500.00	$ 175.00	$ 3,500.00	$ -
PNC211727 1B1--01-221	PIPE CULVERT RCP CLASS IV ONLY 36S/CD	20	linear foot	$ 160.00	$ 3,200.00	$ 160.00	$ 3,200.00	$ -
PNC211727 1B1--01-222	CLEANING & SEALING EXISTING PIPE JOINT 15 18 24 STORM SEWER	10	each	$ 2,200.00	$ 22,000.00	$ 2,200.00	$ 22,000.00	$ -
PNC211727 1B1--01-223	CLEANING & SEALING EXISTING PIPE JOINT 30 36 STORM SEWER	2	each	$ 2,250.00	$ 4,500.00	$ 2,250.00	$ 4,500.00	$ -
PNC211727 1B1--01-224	CLEANING & SEALING EXISTING PIPE JOINT 42 48 STORM SEWER	2	each	$ 2,265.00	$ 4,530.00	$ 2,265.00	$ 4,530.00	$ -
PNC211727 1B1--01-225	CLEANING & SEALING EXISTING PIPE JOINT 54 60 STORM SEWER	2	each	$ 2,280.00	$ 4,560.00	$ 2,280.00	$ 4,560.00	$ -
PNC211727 1B1--01-226	CLEANING & SEALING EXISTING PIPE JOINT >60 STORM SEWER	2	each	$ 2,295.00	$ 4,590.00	$ 2,295.00	$ 4,590.00	$ -
PNC211727 1B1--01-227	CLEANING & SEALING EXISTING PIPE JOINT 15 18 24 CROSS DRAIN	2	each	$ 1,500.00	$ 3,000.00	$ 1,500.00	$ 3,000.00	$ -
PNC211727 1B1--01-228	CLEANING & SEALING EXISTING PIPE JOINT 30 36 CROSS DRAIN	2	each	$ 1,550.00	$ 3,100.00	$ 1,550.00	$ 3,100.00	$ -
PNC211727 1B1--01-229	CLEANING & SEALING EXISTING PIPE JOINT 42 48 CROSS DRAIN	2	each	$ 1,575.00	$ 3,150.00	$ 1,575.00	$ 3,150.00	$ -
PNC211727 1B1--01-230	CLEANING & SEALING EXISTING PIPE JOINT 5460 CROSS DRAIN	2	each	$ 1,600.00	$ 3,200.00	$ 1,600.00	$ 3,200.00	$ -
PNC211727 1B1--01-231	CLEANING & SEALING EXISTING PIPE JOINT >60 CROSS DRAIN	2	each	$ 1,625.00	$ 3,250.00	$ 1,625.00	$ 3,250.00	$ -
PNC211727 1B1--01-232	PIPE FILLING AND PLUGGING- PLACE OUT OF SERVICE	30	cubic yard	$ 500.00	$ 15,000.00	$ 500.00	$ 15,000.00	$ -
PNC211727 1B1--01-233	DESILTING CONCRETE BOX CULVERT	5	cubic yard	$ 500.00	$ 2,500.00	$ 500.00	$ 2,500.00	$ -
PNC211727 1B1--01-234	PVC PIPE FOR BACK OF SIDEWALK 4	100	linear foot	$ 5.00	$ 500.00	$ 5.00	$ 500.00	$ -
PNC211727 1B1--01-235	PVC PIPE FOR BACK OF SIDEWALK NON-STANDARD DIAMETER	100	linear foot	$ 5.00	$ 500.00	$ 5.00	$ 500.00	$ -
PNC211727 1B1--01-236	MITERED END SECTION OPTIONAL ROUND 12 1518 CD	5	each	$ 360.00	$ 1,800.00	$ 360.00	$ 1,800.00	$ -
PNC211727 1B1--01-237	MITERED END SECTION OPTIONAL ROUND 24 CD	5	each	$ 375.00	$ 1,875.00	$ 375.00	$ 1,875.00	$ -
PNC211727 1B1--01-238	MITERED END SECTION OPTIONAL ROUND 3036 CD	5	each	$ 400.00	$ 2,000.00	$ 400.00	$ 2,000.00	$ -
PNC211727 1B1--01-239	MITERED END SECTION OPTIONAL ROUND 42 48 CD	5	each	$ 500.00	$ 2,500.00	$ 500.00	$ 2,500.00	$ -
PNC211727 1B1--01-240	PIPE LINER OPTIONAL MATERIAL 0-24	1500	linear foot	$ 250.00	$ 375,000.00	$ 225.00	$ 337,500.00	$ (25.00)
PNC211727 1B1--01-241	PIPE LINER OPTIONAL MATERIAL 25-36	500	linear foot	$ 300.00	$ 150,000.00	$ 300.00	$ 150,000.00	$ -
PNC211727 1B1--01-242	PIPE LINER OPTIONAL MATERIAL 37-48	20	linear foot	$ 700.00	$ 14,000.00	$ 700.00	$ 14,000.00	$ -
PNC211727 1B1--01-243	STORM SEWER INSPECTION (VIDEO CAMERA)	100	linear foot	$ 20.00	$ 2,000.00	$ 20.00	$ 2,000.00	$ -
PNC211727 1B1--01-244	TRENCH DRAIN STANDARD	100	linear foot	$ 25.00	$ 2,500.00	$ 25.00	$ 2,500.00	$ -
PNC211727 1B1--01-245	TRENCH DRAIN CLEANING	100	linear foot	$ 100.00	$ 10,000.00	$ 100.00	$ 10,000.00	$ -
PNC211727 1B1--01-246	UNDERDRAIN TYPE II	100	linear foot	$ 15.00	$ 1,500.00	$ 15.00	$ 1,500.00	$ -
PNC211727 1B1--01-247	FRENCH DRAIN 18	200	linear foot	$ 265.00	$ 53,000.00	$ 265.00	$ 53,000.00	$ -
PNC211727 1B1--01-248	FRENCH DRAIN 24	50	linear foot	$ 275.00	$ 13,750.00	$ 275.00	$ 13,750.00	$ -
PNC211727 1B1--01-249	FRENCH DRAIN 30	50	linear foot	$ 275.00	$ 13,750.00	$ 275.00	$ 13,750.00	$ -
PNC211727 1B1--01-250	FRENCH DRAIN 36	2000	linear foot	$ 150.00	$ 300,000.00	$ 140.00	$ 280,000.00	$ (10.00)
PNC211727 1B1--01-251	BALLAST ROCK FRENCH DRAIN AGGREGATE	20	cubic yard	$ 75.00	$ 1,500.00	$ 75.00	$ 1,500.00	$ -
PNC211727 1B1--01-252	SHEET PILING STEEL TEMPORARY-CRITICAL	100	square foot	$ 25.00	$ 2,500.00	$ 25.00	$ 2,500.00	$ -
PNC211727 1B1--01-253	STORM DRAINAGE DESILTING VIDEO & FINISHED CD OR DVD 0-24 PIPE	7000	linear foot	$ 15.00	$ 105,000.00	$ 15.00	$ 105,000.00	$ -
PNC211727 1B1--01-254	STORM DRAINAGE DESILTING VIDEO & FINISHED CD OR DVD 25-36 PIPE	1000	linear foot	$ 26.00	$ 26,000.00	$ 26.00	$ 26,000.00	$ -
PNC211727 1B1--01-255	STORM DRAINAGE DESILTING VIDEO & FINISHED CD OR DVD 37-48 PIPE	100	linear foot	$ 40.00	$ 4,000.00	$ 40.00	$ 4,000.00	$ -
PNC211727 1B1--01-256	STORM DRAINAGE DESILTING VIDEO & FINISHED CD OR DVD 49-60 PIPE	100	linear foot	$ 50.00	$ 5,000.00	$ 50.00	$ 5,000.00	$ -
PNC211727 1B1--01-257	STORM DRAINAGE DESILTING VIDEO & FINISHED CD OR DVD 61 OR GRATER PIPE	100	linear foot	$ 75.00	$ 7,500.00	$ 75.00	$ 7,500.00	$ -
PNC211727 1B1--01-258	VIDEO STORM DRAINAGE & FINISH CD 4 HR MINIMUM CHARGE	10	hour	$ 310.00	$ 3,100.00	$ 310.00	$ 3,100.00	$ -
PNC211727 1B1--01-259	WELL POINT SYSTEM COMPLETE 4 PUMP	5	day	$ 300.00	$ 1,500.00	$ 300.00	$ 1,500.00	$ -
PNC211727 1B1--01-260	WELL POINT SYSTEM COMPLETE 6 PUMP	5	day	$ 400.00	$ 2,000.00	$ 300.00	$ 1,500.00	$ (100.00)
PNC211727 1B1--01-261	WELL POINT SYSTEM COMPLETE 8 PUMP	100	day	$ 800.00	$ 80,000.00	$ 800.00	$ 80,000.00	$ -
PNC211727 1B1--01-262	LASER PROFILE STORM DRAINAGE WITH DVD VIDEO & REPORT	100	linear foot	$ 5.00	$ 500.00	$ 5.00	$ 500.00	$ -
PNC211727 1B1--01-263	PIPE/CULVERT DIVING INSPECTION 3-PERSON CREW 4 HR MINIMUM CHARGE	10	hour	$ 900.00	$ 9,000.00	$ 900.00	$ 9,000.00	$ -
PNC211727 1B1--01-264	BY-PASS PUMP 4	30	day	$ 750.00	$ 22,500.00	$ 700.00	$ 21,000.00	$ (50.00)
PNC211727 1B1--01-265	BY-PASS PUMP 6	20	day	$ 850.00	$ 17,000.00	$ 710.00	$ 14,200.00	$ (140.00)
PNC211727 1B1--01-266	BY-PASS PUMP 8	5	day	$ 900.00	$ 4,500.00	$ 720.00	$ 3,600.00	$ (180.00)
PNC211727 1B1--01-267	12 PLUG FOR BLOCKING DRAINAGE LINE WITHIN WATERTABLE - INCLUDES INSTALLATION OP	5	each	$ 200.00	$ 1,000.00	$ 200.00	$ 1,000.00	$ -
PNC211727 1B1--01-268	15 PLUG FOR BLOCKING DRAINAGE LINE WITHIN WATERTABLE - INCLUDES INSTALLATION OP	5	each	$ 250.00	$ 1,250.00	$ 250.00	$ 1,250.00	$ -
PNC211727 1B1--01-269	18 PLUG FOR BLOCKING DRAINAGE LINE WITHIN WATERTABLE - INCLUDES INSTALLATION OP	5	each	$ 300.00	$ 1,500.00	$ 300.00	$ 1,500.00	$ -
PNC211727 1B1--01-270	24 PLUG FOR BLOCKING DRAINAGE LINE WITHIN WATERTABLE - INCLUDES INSTALLATION OP	5	each	$ 350.00	$ 1,750.00	$ 350.00	$ 1,750.00	$ -
PNC211727 1B1--01-271	30 PLUG FOR BLOCKING DRAINAGE LINE WITHIN WATERTABLE - INCLUDES INSTALLATION OP	5	each	$ 570.00	$ 2,850.00	$ 570.00	$ 2,850.00	$ -
PNC211727 1B1--01-272	36 PLUG FOR BLOCKING DRAINAGE LINE WITHIN WATERTABLE - INCLUDES INSTALLATION OP	5	each	$ 580.00	$ 2,900.00	$ 580.00	$ 2,900.00	$ -
PNC211727 1B1--01-273	42 PLUG FOR BLOCKING DRAINAGE LINE WITHIN WATERTABLE - INCLUDES INSTALLATION OP	5	each	$ 600.00	$ 3,000.00	$ 600.00	$ 3,000.00	$ -
PNC211727 1B1--01-274	48 PLUG FOR BLOCKING DRAINAGE LINE WITHIN WATERTABLE - INCLUDES INSTALLATION OP	5	each	$ 700.00	$ 3,500.00	$ 700.00	$ 3,500.00	$ -
PNC211727 1B1--01-275	54 PLUG FOR BLOCKING DRAINAGE LINE WITHIN WATERTABLE - INCLUDES INSTALLATION OP	5	each	$ 800.00	$ 4,000.00	$ 800.00	$ 4,000.00	$ -
PNC211727 1B1--01-276	60 PLUG FOR BLOCKING DRAINAGE LINE WITHIN WATERTABLE - INCLUDES INSTALLATION OP	5	each	$ 900.00	$ 4,500.00	$ 900.00	$ 4,500.00	$ -
PNC211727 1B1--01-277	66 PLUG FOR BLOCKING DRAINAGE LINE WITHIN WATERTABLE - INCLUDES INSTALLATION OP	5	each	$ 1,050.00	$ 5,250.00	$ 1,050.00	$ 5,250.00	$ -
PNC211727 1B1--01-278	72 PLUG FOR BLOCKING DRAINAGE LINE WITHIN WATERTABLE - INCLUDES INSTALLATION OP	5	each	$ 1,150.00	$ 5,750.00	$ 1,150.00	$ 5,750.00	$ -
PNC211727 1B1--01-279	78 PLUG FOR BLOCKING DRAINAGE LINE WITHIN WATERTABLE - INCLUDES INSTALLATION OP	5	each	$ 1,250.00	$ 6,250.00	$ 1,250.00	$ 6,250.00	$ -
PNC211727 1B1--01-280	84 PLUG FOR BLOCKING DRAINAGE LINE WITHIN WATERTABLE - INCLUDES INSTALLATION OP	5	each	$ 1,300.00	$ 6,500.00	$ 1,300.00	$ 6,500.00	$ -
PNC211727 1B1--01-281	STEEL ROAD PLATE UP TO 30 DAYS F&I	1000	square foot	$ 30.00	$ 30,000.00	$ 30.00	$ 30,000.00	$ -
PNC211727 1B1--01-282	MINOR INLET-TOP REPAIR (NO REINFORCEMENT REPAIR)	5	each	$ 750.00	$ 3,750.00	$ 750.00	$ 3,750.00	$ -

Bid Tabulation - Best and Final Offer (BAFO) Costs Savings

Solicitation No.: PNC211727 1B1
Solicitation Title: General Roadway and Miscellaneous Construction
Using Agency: Highway and Bridge Maintenance Division
Prepared by: Netanya Hogu, Purchasing Agent

Date BAFO Posted: January 24, 2019
Date BAFO Opened: January 31, 2019
Vendors Invited: Two (2)
Responses: One (1)
Declinations: Zero (0)

				Lowest Vendor for BAFO				
				DP Development of the Treasure Coast LLC				
Item Number	Item Title	Quantity	Unit	Original Unit Price	Original Total	BAFO Unit Price	BAFO Total	Difference in BAFO Unit Price and Original Unit Price
PNC211727 1B1--01-283	MAJOR INLET-TOP REPAIR (REINFORCEMENT REPAIR)	5	each	$ 800.00	$ 4,000.00	$ 800.00	$ 4,000.00	$ -
PNC211727 1B1--01-284	PLASTIC FILTER FABRIC SUBSURFACE	5000	square yard	$ 5.00	$ 25,000.00	$ 5.00	$ 25,000.00	$ -
PNC211727 1B1--01-285	PIPE HANDRAIL- GUIDERAIL STEEL	10	linear foot	$ 65.00	$ 650.00	$ 65.00	$ 650.00	$ -
PNC211727 1B1--01-286	PIPE HANDRAIL- GUIDERAIL ALUMINUM	50	linear foot	$ 85.00	$ 4,250.00	$ 85.00	$ 4,250.00	$ -
PNC211727 1B1--01-287	PEDESTRIAN / BICYCLE RAILING STEEL 42 TYPE 1	10	linear foot	$ 125.00	$ 1,250.00	$ 125.00	$ 1,250.00	$ -
PNC211727 1B1--01-288	PEDESTRIAN / BICYCLE RAILING STEEL ONLY 54 TYPE 1	10	linear foot	$ 125.00	$ 1,250.00	$ 125.00	$ 1,250.00	$ -
PNC211727 1B1--01-289	PEDESTRIAN / BICYCLE RAILING ALUMINUM ONLY 42 TYPE 1	50	linear foot	$ 125.00	$ 6,250.00	$ 125.00	$ 6,250.00	$ -
PNC211727 1B1--01-290	PEDESTRIAN / BICYCLE RAILING ALUMINUM ONLY 54 TYPE 1	50	linear foot	$ 125.00	$ 6,250.00	$ 125.00	$ 6,250.00	$ -
PNC211727 1B1--01-291	ALUMINUM BULLET RAILINGS SINGLE RAIL	50	linear foot	$ 60.00	$ 3,000.00	$ 60.00	$ 3,000.00	$ -
PNC211727 1B1--01-292	ALUMINUM BULLET RAILINGS DOUBLE RAIL	50	linear foot	$ 90.00	$ 4,500.00	$ 90.00	$ 4,500.00	$ -
PNC211727 1B1--01-293	BULLET RAIL RELOCATE- DOUBLE RAIL	50	linear foot	$ 30.00	$ 1,500.00	$ 30.00	$ 1,500.00	$ -
PNC211727 1B1--01-294	CONCRETE CURB & GUTTER TYPE E	100	linear foot	$ 15.00	$ 1,500.00	$ 15.00	$ 1,500.00	$ -
PNC211727 1B1--01-295	CONCRETE CURB & GUTTER TYPE F	5000	linear foot	$ 45.00	$ 225,000.00	$ 45.00	$ 225,000.00	$ -
PNC211727 1B1--01-296	CONCRETE CURB TYPE D	1000	linear foot	$ 30.00	$ 30,000.00	$ 30.00	$ 30,000.00	$ -
PNC211727 1B1--01-297	VALLEY GUTTER- CONCRETE	4000	linear foot	$ 40.00	$ 160,000.00	$ 35.00	$ 140,000.00	$ (5.00)
PNC211727 1B1--01-298	TRAFFIC SEPARATOR CONCRETE - TYPE IV 4 WIDE	20	linear foot	$ 140.00	$ 2,800.00	$ 140.00	$ 2,800.00	$ -
PNC211727 1B1--01-299	SHOULDER GUTTER- CONCRETE	100	linear foot	$ 10.00	$ 1,000.00	$ 10.00	$ 1,000.00	$ -
PNC211727 1B1--01-300	CONCRETE TRAFFIC SEPARATOR SPECIAL-VARIABLE WIDTH	200	square yard	$ 15.00	$ 3,000.00	$ 15.00	$ 3,000.00	$ -
PNC211727 1B1--01-301	MEDIAN CONCRETE BARRIER WALL	500	linear foot	$ 75.00	$ 37,500.00	$ 75.00	$ 37,500.00	$ -
PNC211727 1B1--01-302	MEDIAN BARRIER WALL CONCRETE PRECAST	20	linear foot	$ 175.00	$ 3,500.00	$ 175.00	$ 3,500.00	$ -
PNC211727 1B1--01-303	CONCRETE SIDEWALK AND DRIVEWAYS 6 THICK	15000	square yard	$ 100.00	$ 1,500,000.00	$ 95.00	$ 1,425,000.00	$ (5.00)
PNC211727 1B1--01-304	CONCRETE SIDEWALK 8 THICK	100	square yard	$ 100.00	$ 10,000.00	$ 100.00	$ 10,000.00	$ -
PNC211727 1B1--01-305	CONCRETE SIDEWALK 10 THICK	150	square yard	$ 140.00	$ 21,000.00	$ 140.00	$ 21,000.00	$ -
PNC211727 1B1--01-306	PERVIOUS CONCRETE PAVEMENT - SIDEWALK 6 THICK	50	square yard	$ 55.00	$ 2,750.00	$ 55.00	$ 2,750.00	$ -
PNC211727 1B1--01-307	PERVIOUS CONCRETE PAVEMENT - TRAFFIC RATED 8 THICK	50	square yard	$ 50.00	$ 2,500.00	$ 50.00	$ 2,500.00	$ -
PNC211727 1B1--01-308	PATTERNED PAVEMENT VEHICULAR AREAS FDOT APL 523-000-009 TRAFFIC PATTERNS ONLY	200	square yard	$ 135.00	$ 27,000.00	$ 135.00	$ 27,000.00	$ -
PNC211727 1B1--01-309	PATTERNED PAVEMENT NON-VEHICULAR AREAS	50	square yard	$ 40.00	$ 2,000.00	$ 40.00	$ 2,000.00	$ -
PNC211727 1B1--01-310	CONCRETE DITCH PAVEMENT NON REINFORCED 6	50	square yard	$ 50.00	$ 2,500.00	$ 50.00	$ 2,500.00	$ -
PNC211727 1B1--01-311	CONCRETE SLOPE PAVEMENT 6 REINFORCED	50	square yard	$ 80.00	$ 4,000.00	$ 80.00	$ 4,000.00	$ -
PNC211727 1B1--01-312	PAVERS ARCHITECTURAL ROADWAY	50	square yard	$ 25.00	$ 1,250.00	$ 25.00	$ 1,250.00	$ -
PNC211727 1B1--01-313	PAVERS ARCHITECTURAL SIDEWALK	20	square yard	$ 95.00	$ 1,900.00	$ 95.00	$ 1,900.00	$ -
PNC211727 1B1--01-314	DETECTABLE WARNING ON EXISTING WALKING SURFACE RETROFIT	50	square foot	$ 35.00	$ 1,750.00	$ 35.00	$ 1,750.00	$ -
PNC211727 1B1--01-315	DETECTABLE WARNING ON EXISTING WALKING SURFACE RETROFIT FDOT APL 527-000-015 O	50	square foot	$ 35.00	$ 1,750.00	$ 35.00	$ 1,750.00	$ -
PNC211727 1B1--01-316	DETECTABLE WARNING ON EXISTING WALKING SURFACE CAST-IN-PLACE	100	square foot	$ 250.00	$ 25,000.00	$ 250.00	$ 25,000.00	$ -
PNC211727 1B1--01-317	ADA COMPLIANT CURB RAMP SINGLE DIRECTION	150	each	$ 3,100.00	$ 465,000.00	$ 3,100.00	$ 465,000.00	$ -
PNC211727 1B1--01-318	ADA COMPLIANT CURB RAMP TWO-DIRECTION	30	each	$ 3,200.00	$ 96,000.00	$ 3,200.00	$ 96,000.00	$ -
PNC211727 1B1--01-319	6 PVC BOLLARD WITH REFLECTIVE TAPE	5	each	$ 1,200.00	$ 6,000.00	$ 900.00	$ 4,500.00	$ (300.00)
PNC211727 1B1--01-320	6 REMOVABLE AND LOCKABLE BOLLARD RPL6 BY TRAFFIC GUARD OR APPROVED EQUAL	5	each	$ 2,200.00	$ 11,000.00	$ 1,500.00	$ 7,500.00	$ (700.00)
PNC211727 1B1--01-321	RIPRAP SAND-CEMENT	10	cubic yard	$ 500.00	$ 5,000.00	$ 500.00	$ 5,000.00	$ -
PNC211727 1B1--01-322	RIPRAP- RUBBLE BANK AND SHORE	10	ton	$ 500.00	$ 5,000.00	$ 500.00	$ 5,000.00	$ -
PNC211727 1B1--01-323	RIPRAP RUBBLE DITCH LINING	10	ton	$ 500.00	$ 5,000.00	$ 500.00	$ 5,000.00	$ -
PNC211727 1B1--01-324	BEDDING STONE	1000	ton	$ 20.00	$ 20,000.00	$ 20.00	$ 20,000.00	$ -
PNC211727 1B1--01-325	SOUND/NOISE BARRIER-INC FOUNDATION PERMANENT	100	square foot	$ 30.00	$ 3,000.00	$ 30.00	$ 3,000.00	$ -
PNC211727 1B1--01-326	PERIMETER WALL	100	square foot	$ 35.00	$ 3,500.00	$ 35.00	$ 3,500.00	$ -
PNC211727 1B1--01-327	GUARDRAIL ROADWAY GENERAL TL-2	2500	linear foot	$ 15.00	$ 37,500.00	$ 15.00	$ 37,500.00	$ -
PNC211727 1B1--01-328	GUARDRAIL ROADWAY GENERAL TL-3	2500	linear foot	$ 25.00	$ 62,500.00	$ 25.00	$ 62,500.00	$ -
PNC211727 1B1--01-329	GUARDRAIL-SHOP BENT PANELS	50	linear foot	$ 12.00	$ 600.00	$ 12.00	$ 600.00	$ -
PNC211727 1B1--01-330	GUARDRAIL-RUB RAIL SINGLE SIDED	50	linear foot	$ 10.00	$ 500.00	$ 10.00	$ 500.00	$ -
PNC211727 1B1--01-331	PIPE RAIL FOR GUARDRAIL	50	linear foot	$ 15.00	$ 750.00	$ 15.00	$ 750.00	$ -
PNC211727 1B1--01-332	RETROFIT EXIST GUARDRAIL-PEDESTRIAN/CYCLE PIPE RAIL	50	linear foot	$ 100.00	$ 5,000.00	$ 100.00	$ 5,000.00	$ -
PNC211727 1B1--01-333	SPECIAL GUARDRAIL POST	5	each	$ 400.00	$ 2,000.00	$ 400.00	$ 2,000.00	$ -
PNC211727 1B1--01-334	GUARDRAIL-BRIDGE ANCHORAGE ASSEMBLY	5	each	$ 250.00	$ 1,250.00	$ 250.00	$ 1,250.00	$ -
PNC211727 1B1--01-335	GUARDRAIL-BRIDGE ANCHORAGE ASSEMBLY RELOCATE	5	each	$ 250.00	$ 1,250.00	$ 250.00	$ 1,250.00	$ -
PNC211727 1B1--01-336	GUARDRAIL-BRIDGE ANCHORAGE ASSEMBLY REMOVE	5	each	$ 25.00	$ 125.00	$ 25.00	$ 125.00	$ -
PNC211727 1B1--01-337	GUARDRAIL REMOVAL	1000	linear foot	$ 5.00	$ 5,000.00	$ 5.00	$ 5,000.00	$ -
PNC211727 1B1--01-338	GUARDRAIL END ANCHORAGE ASSEMBLY/END TREATMENT-FLARED	5	each	$ 750.00	$ 3,750.00	$ 750.00	$ 3,750.00	$ -
PNC211727 1B1--01-339	GUARDRAIL END ANCHORAGE ASSEMBLY/END TREATMENT-PARALLEL	5	each	$ 750.00	$ 3,750.00	$ 750.00	$ 3,750.00	$ -
PNC211727 1B1--01-340	GUARDRAIL END ANCHORAGE ASSEMBLY/END TREATMENT-TYPE II	5	each	$ 750.00	$ 3,750.00	$ 750.00	$ 3,750.00	$ -
PNC211727 1B1--01-341	GUARDRAIL END ANCHORAGE ASSEMBLY/END TREATMENT-TYPE CRT	5	each	$ 750.00	$ 3,750.00	$ 750.00	$ 3,750.00	$ -
PNC211727 1B1--01-342	GUARDRAIL PANELS-INSTALL 0 - 50 FEET	100	linear foot	$ 2.00	$ 200.00	$ 2.00	$ 200.00	$ -
PNC211727 1B1--01-343	GUARDRAIL PANELS-SHOP BENT	100	linear foot	$ 10.00	$ 1,000.00	$ 10.00	$ 1,000.00	$ -
PNC211727 1B1--01-344	GUARDRAIL PANELS-0-50 FEET	100	linear foot	$ 10.00	$ 1,000.00	$ 10.00	$ 1,000.00	$ -
PNC211727 1B1--01-345	GUARDRAIL THRIE BEAM-REPLACE	100	linear foot	$ 10.00	$ 1,000.00	$ 10.00	$ 1,000.00	$ -
PNC211727 1B1--01-346	GUARDRAIL-RESET	100	linear foot	$ 8.00	$ 800.00	$ 8.00	$ 800.00	$ -
PNC211727 1B1--01-347	BARRIERS DELINEATORS	30	each	$ 12.00	$ 360.00	$ 12.00	$ 360.00	$ -
PNC211727 1B1--01-348	RETAINING WALL SYSTEM PERMANENT EXCLUDING BARRIER	100	square foot	$ 60.00	$ 6,000.00	$ 50.00	$ 5,000.00	$ (10.00)
PNC211727 1B1--01-349	RETAINING WALL SYSTEM PERMANENT-WIDENING ATTACHED TO EXISTING WALL	100	square foot	$ 30.00	$ 3,000.00	$ 30.00	$ 3,000.00	$ -
PNC211727 1B1--01-350	FENCING TYPE B 0.0-6.0 STANDARD	1000	linear foot	$ 40.00	$ 40,000.00	$ 30.00	$ 30,000.00	$ (10.00)
PNC211727 1B1--01-351	FENCING TYPE B 6.1-8.0 STANDARD	100	linear foot	$ 41.00	$ 4,100.00	$ 41.00	$ 4,100.00	$ -
PNC211727 1B1--01-352	FENCING TYPE B 8.1-10.0 STANDARD	50	linear foot	$ 42.00	$ 2,100.00	$ 42.00	$ 2,100.00	$ -
PNC211727 1B1--01-353	FENCING TYPE B 0.5-6.0 W/ VINYL COATING	50	linear foot	$ 60.00	$ 3,000.00	$ 60.00	$ 3,000.00	$ -
PNC211727 1B1--01-354	FENCING TYPE B 6.1-8.0 W/ VINYL COATING	50	linear foot	$ 65.00	$ 3,250.00	$ 65.00	$ 3,250.00	$ -
PNC211727 1B1--01-355	FENCING TYPE B 8.1-10.0 W/ VINYL COATING	50	linear foot	$ 80.00	$ 4,000.00	$ 80.00	$ 4,000.00	$ -
PNC211727 1B1--01-356	FENCING TYPE B 5.1-6.0 W/BARBED WIRE ATTACHMENT	20	linear foot	$ 12.50	$ 250.00	$ 12.50	$ 250.00	$ -
PNC211727 1B1--01-357	FENCING TYPE B 6.1-7.0 W/BARBED WIRE ATTACHMENT	20	linear foot	$ 13.00	$ 260.00	$ 13.00	$ 260.00	$ -
PNC211727 1B1--01-358	FENCING TYPE B 8.1-10.0 W/BARBED WIRE ATTACHMENT	20	linear foot	$ 13.00	$ 260.00	$ 13.00	$ 260.00	$ -
PNC211727 1B1--01-359	FENCING TYPE B 0.0-6.0 RESET EXISTING	50	linear foot	$ 5.00	$ 250.00	$ 5.00	$ 250.00	$ -
PNC211727 1B1--01-360	FENCING TYPE B 6.1-8.0 RESET EXISTING	50	linear foot	$ 5.00	$ 250.00	$ 5.00	$ 250.00	$ -
PNC211727 1B1--01-361	FENCING TYPE B 0.0-10.0 RELOCATE	50	linear foot	$ 5.00	$ 250.00	$ 5.00	$ 250.00	$ -
PNC211727 1B1--01-362	FENCING TYPE B TOP RAIL	100	linear foot	$ 6.00	$ 600.00	$ 6.00	$ 600.00	$ -
PNC211727 1B1--01-363	FENCE GATE TYPE B SINGLE 0-6.0 OPENING	1	each	$ 600.00	$ 600.00	$ 600.00	$ 600.00	$ -
PNC211727 1B1--01-364	FENCE GATE TYPE B SINGLE 6.1-20.0 OPENING	2	each	$ 900.00	$ 1,800.00	$ 900.00	$ 1,800.00	$ -
PNC211727 1B1--01-365	FENCE GATE TYPE B DOUBLE 6.1-18.0 OPENING	1	each	$ 650.00	$ 650.00	$ 650.00	$ 650.00	$ -
PNC211727 1B1--01-366	FENCE GATE TYPE B DOUBLE 18.1-24 OPENING	1	each	$ 900.00	$ 900.00	$ 900.00	$ 900.00	$ -
PNC211727 1B1--01-367	FENCE GATE TYPE B DOUBLE 24.1-30.0 OPENING	1	each	$ 1,200.00	$ 1,200.00	$ 1,200.00	$ 1,200.00	$ -
PNC211727 1B1--01-368	FENCE GATE TYPE B DOUBLE GREATER THAN 30 OPENING	1	each	$ 1,400.00	$ 1,400.00	$ 1,400.00	$ 1,400.00	$ -
PNC211727 1B1--01-369	FENCE GATE TYPE B SLIDING/CANTILEVER 6.1-12 OPENING	1	each	$ 1,150.00	$ 1,150.00	$ 1,150.00	$ 1,150.00	$ -
PNC211727 1B1--01-370	FENCE GATE TYPE B SLIDING/CANTILEVER 12.1-18 OPENING	1	each	$ 1,150.00	$ 1,150.00	$ 1,150.00	$ 1,150.00	$ -
PNC211727 1B1--01-371	FENCE GATE TYPE B SLIDING/CANTILEVER 18.1-20 OPENING	1	each	$ 1,400.00	$ 1,400.00	$ 1,400.00	$ 1,400.00	$ -
PNC211727 1B1--01-372	FENCE GATE TYPE B SLIDING/CANTILEVER 20.1-24 OPENING	1	each	$ 1,500.00	$ 1,500.00	$ 1,500.00	$ 1,500.00	$ -
PNC211727 1B1--01-373	FENCE GATE TYPE B SLIDING/CANTILEVER 24.1-30 OPENING	1	each	$ 1,800.00	$ 1,800.00	$ 1,800.00	$ 1,800.00	$ -
PNC211727 1B1--01-374	FENCE GATE TYPE B SLIDING/CANTILEVER GREATER THAN 30 OPENING	1	each	$ 2,900.00	$ 2,900.00	$ 2,900.00	$ 2,900.00	$ -
PNC211727 1B1--01-375	PERFORMANCE TURF HYDROSEED ONLY	1000	square yard	$ 0.75	$ 750.00	$ 0.75	$ 750.00	$ -
PNC211727 1B1--01-376	PERFORMANCE TURF BONDED FIBER MATRIX ONLY	200	square yard	$ 0.50	$ 100.00	$ 0.50	$ 100.00	$ -

Bid Tabulation - Best and Final Offer (BAFO) Costs Savings

Solicitation No.: PNC211727 1B1
Solicitation Title: General Roadway and Miscellaneous Construction
Using Agency: Highway and Bridge Maintenance Division
Prepared by: Netanya Hogu, Purchasing Agent

Date BAFO Posted: January 24, 2019
Date BAFO Opened: January 31, 2019
Vendors Invited: Two (2)
Responses: One (1)
Declinations: Zero (0)

				Lowest Vendor for BAFO				
				DP Development of the Treasure Coast LLC				
Item Number	Item Title	Quantity	Unit	Original Unit Price	Original Total	BAFO Unit Price	BAFO Total	Difference in BAFO Unit Price and Original Unit Price
PNC211727 1B1--01-377	PERFORMANCE TURF SEED AND MULCH ONLY	200	square yard	$ 1.50	$ 300.00	$ 1.50	$ 300.00	$ -
PNC211727 1B1--01-378	PERFORMANCE TURF SOD	30000	square yard	$ 7.25	$ 217,500.00	$ 6.50	$ 195,000.00	$ (0.75)
PNC211727 1B1--01-379	MULCH REPLACEMENT	50	cubic yard	$ 75.00	$ 3,750.00	$ 75.00	$ 3,750.00	$ -
PNC211727 1B1--01-380	PLASTIC EROSION MAT TURF REINFORCED MAT TYPE 1	100	square yard	$ 7.00	$ 700.00	$ 7.00	$ 700.00	$ -
PNC211727 1B1--01-381	PLASTIC EROSION MAT TURF REINFORCED MAT TYPE 2	100	square yard	$ 9.00	$ 900.00	$ 9.00	$ 900.00	$ -
PNC211727 1B1--01-382	PLASTIC EROSION MAT TURF REINFORCED MAT TYPE 3	100	square yard	$ 12.00	$ 1,200.00	$ 12.00	$ 1,200.00	$ -
PNC211727 1B1--01-383	MISCELLANEOUS GROUND COVER/SHRUBS INSTALLATION (1-GALLON CONTAINER)	200	each	$ 10.00	$ 2,000.00	$ 10.00	$ 2,000.00	$ -
PNC211727 1B1--01-384	MISCELLANEOUS GROUND COVER/SHRUBS INSTALLATION (3-GALLON CONTAINER)	200	each	$ 18.00	$ 3,600.00	$ 18.00	$ 3,600.00	$ -
PNC211727 1B1--01-385	MISCELLANEOUS GROUND COVER/SHRUBS INSTALLATION (7-GALLON CONTAINER)	200	each	$ 50.00	$ 10,000.00	$ 50.00	$ 10,000.00	$ -
PNC211727 1B1--01-386	MISCELLANEOUS SMALL TREES - UP TO 10 OVERALL HEIGHT	50	each	$ 325.00	$ 16,250.00	$ 325.00	$ 16,250.00	$ -
PNC211727 1B1--01-387	MISCELLANEOUS LARGE TREES 10-12 OVERALL HEIGHT	50	each	$ 450.00	$ 22,500.00	$ 450.00	$ 22,500.00	$ -
PNC211727 1B1--01-388	MISCELLANEOUS LARGE TREES 13-18 OVERALL HEIGHT	1000	linear foot	$ 60.00	$ 60,000.00	$ 50.00	$ 50,000.00	$ (10.00)
PNC211727 1B1--01-389	FLORIDA THATCH PALM - UP TO 12 OVERALL HEIGHT	100	linear foot	$ 30.00	$ 3,000.00	$ 30.00	$ 3,000.00	$ -
PNC211727 1B1--01-390	ROYSTONEA SPP. (ROYAL PALM) PLANT UP TO 12 OVERALL HEIGHT	100	linear foot	$ 35.00	$ 3,500.00	$ 35.00	$ 3,500.00	$ -
PNC211727 1B1--01-391	ROYSTONEA SPP. (ROYAL PALM) PLANT 13-20 OVERALL HEIGHT	200	linear foot	$ 45.00	$ 9,000.00	$ 45.00	$ 9,000.00	$ -
PNC211727 1B1--01-392	SABAL PALMETTO (CABBAGE PALM) UP TO 12 OVERALL HEIGHT	200	linear foot	$ 27.00	$ 5,400.00	$ 27.00	$ 5,400.00	$ -
PNC211727 1B1--01-393	SABAL PALMETTO (CABBAGE PALM) 13-20 OVERALL HEIGHT	400	linear foot	$ 21.00	$ 8,400.00	$ 21.00	$ 8,400.00	$ -
PNC211727 1B1--01-394	DELONIX REGIA (ROYAL POINCIANA) PLANT UP TO 12 OVERALL HEIGHT	100	feet	$ 45.00	$ 4,500.00	$ 45.00	$ 4,500.00	$ -
PNC211727 1B1--01-395	DELONIX REGIA (ROYAL POINCIANA) PLANT 13-20 OVERALL HEIGHT	100	feet	$ 57.00	$ 5,700.00	$ 57.00	$ 5,700.00	$ -
PNC211727 1B1--01-396	LARGERSTROEMIA INDICA (CRAPE MYRTLE) PLANT UP TO 12 OVERALL HEIGHT	200	feet	$ 45.00	$ 9,000.00	$ 45.00	$ 9,000.00	$ -
PNC211727 1B1--01-397	BURSERA SIMARUBA (GUMBO LIMBO) PLANT UP TO 12 OVERALL HEIGHT	200	feet	$ 45.00	$ 9,000.00	$ 45.00	$ 9,000.00	$ -
PNC211727 1B1--01-398	BURSERA SIMARUBA (GUMBO LIMBO) PLANT 13-20 OVERALL HEIGHT	200	feet	$ 57.00	$ 11,400.00	$ 57.00	$ 11,400.00	$ -
PNC211727 1B1--01-399	QUERCUS VIRGINIANA (LIVE OAK) PLANT UP TO 12 OVERALL HEIGHT	200	feet	$ 45.00	$ 9,000.00	$ 45.00	$ 9,000.00	$ -
PNC211727 1B1--01-400	QUERCUS VIRGINIANA (LIVE OAK) PLANT 13-20 OVERALL HEIGHT	500	feet	$ 57.00	$ 28,500.00	$ 57.00	$ 28,500.00	$ -
PNC211727 1B1--01-401	TAXODIUM SPP. (CYPRESS BALD OR POND) PLANT UP TO 12 OVERALL HEIGHT	200	feet	$ 45.00	$ 9,000.00	$ 45.00	$ 9,000.00	$ -
PNC211727 1B1--01-402	TAXODIUM SPP. (CYPRESS BALD OR POND) PLANT 13-20 OVERALL HEIGHT	500	feet	$ 57.00	$ 28,500.00	$ 57.00	$ 28,500.00	$ -
PNC211727 1B1--01-403	BULNESIA ARBOREA (VERA WOOD) PLANT UP TO 12 OVERALL HEIGHT	500	feet	$ 15.00	$ 7,500.00	$ 15.00	$ 7,500.00	$ -
PNC211727 1B1--01-404	TOPSOIL 50% PLANTING SOIL AND 50% SAND	500	cubic yard	$ 25.00	$ 12,500.00	$ 25.00	$ 12,500.00	$ -
PNC211727 1B1--01-405	FERTILIZER 50 LB. BAG	5	each	$ 50.00	$ 250.00	$ 50.00	$ 250.00	$ -
PNC211727 1B1--01-406	WATERING (per KGAL)	200	each	$ 80.00	$ 16,000.00	$ 80.00	$ 16,000.00	$ -
PNC211727 1B1--01-407	ROOT BARRIER	2000	linear foot	$ 40.00	$ 80,000.00	$ 30.00	$ 60,000.00	$ (10.00)
PNC211727 1B1--01-408	SPRINKLER HEADS POP-UP ROTATING	300	each	$ 80.00	$ 24,000.00	$ 80.00	$ 24,000.00	$ -
PNC211727 1B1--01-409	4 PVC PIPE SCH. 40	500	linear foot	$ 9.25	$ 4,625.00	$ 9.25	$ 4,625.00	$ -
PNC211727 1B1--01-410	3 PVC PIPE SCH. 40	500	linear foot	$ 9.20	$ 4,600.00	$ 9.20	$ 4,600.00	$ -
PNC211727 1B1--01-411	2 PVC PIPE SCH. 40	500	linear foot	$ 9.15	$ 4,575.00	$ 9.15	$ 4,575.00	$ -
PNC211727 1B1--01-412	1 PVC PIPE SCH. 40	1500	linear foot	$ 9.50	$ 14,250.00	$ 9.50	$ 14,250.00	$ -
PNC211727 1B1--01-413	3/4 PVC PIPE SCH. 40	500	linear foot	$ 10.00	$ 5,000.00	$ 10.00	$ 5,000.00	$ -
PNC211727 1B1--01-414	ROOT PRUNING/TREE TRIMMING CREW 3-PERSON CREW 4 HR MINIMUM CHARGE	100	hour	$ 200.00	$ 20,000.00	$ 200.00	$ 20,000.00	$ -
PNC211727 1B1--01-415	TREE REMOVAL CREW 3-PERSON CREW 4 HR MINIMUM CHARGE	10	hour	$ 200.00	$ 2,000.00	$ 200.00	$ 2,000.00	$ -
PNC211727 1B1--01-416	STUMP GRINDER 2-PERSON CREW 4 HR MINIMUM CHARGE	10	hour	$ 200.00	$ 2,000.00	$ 200.00	$ 2,000.00	$ -
PNC211727 1B1--01-417	GRAFFITI REMOVAL 100 SF MINIMUM CHARGE	5000	square foot	$ 0.25	$ 1,250.00	$ 0.25	$ 1,250.00	$ -
PNC211727 1B1--01-418	CERTIFIED ARBORIST	20	hour	$ 175.00	$ 3,500.00	$ 175.00	$ 3,500.00	$ -
PNC211727 1B1--01-419	ADDITIONAL LABORER	2000	hour	$ 55.00	$ 110,000.00	$ 50.00	$ 100,000.00	$ (5.00)
PNC211727 1B1--01-420	SKILLED LABORER	100	hour	$ 60.00	$ 6,000.00	$ 60.00	$ 6,000.00	$ -
PNC211727 1B1--01-421	MASTER ELECTRICIAN	10	hour	$ 250.00	$ 2,500.00	$ 250.00	$ 2,500.00	$ -
PNC211727 1B1--01-422	FDOT CERTIFIED SIGNAL TECHNICIAN 2-PERSON CREW	10	hour	$ 350.00	$ 3,500.00	$ 350.00	$ 3,500.00	$ -
PNC211727 1B1--01-423	DIVER (REGULAR TIME) 4 HOUR MINIMUM CHARGE	10	hour	$ 300.00	$ 3,000.00	$ 300.00	$ 3,000.00	$ -
PNC211727 1B1--01-424	QUALIFIED CONSTRUCTION TRAINING QUALIFICATION PROGRAM (CTQP) ASPHALT PAVING	100	hour	$ 130.00	$ 13,000.00	$ 130.00	$ 13,000.00	$ -
PNC211727 1B1--01-425	TRENCH BOX UP TO 10	20	day	$ 500.00	$ 10,000.00	$ 500.00	$ 10,000.00	$ -
PNC211727 1B1--01-426	TRUCK MOUNTED ATTENUATOR (TMA) HOURS MINIMUM CHARGE	20	hour	$ 220.00	$ 4,400.00	$ 220.00	$ 4,400.00	$ -
PNC211727 1B1--01-427	SERVICE TRUCK & OPERATOR PERSONNEL LIFT TO 35 FT HIGH ACCESS 4 HR MINIMUM CHAR	10	hour	$ 100.00	$ 1,000.00	$ 100.00	$ 1,000.00	$ -
PNC211727 1B1--01-428	BUCKET TRUCK & OPERATOR 50 FT REACH 4 HR MINIMUM CHARGE	10	hour	$ 125.00	$ 1,250.00	$ 125.00	$ 1,250.00	$ -
PNC211727 1B1--01-429	D3 OR D5 BACKHOE & OPERATOR	30	hour	$ 175.00	$ 5,250.00	$ 175.00	$ 5,250.00	$ -
PNC211727 1B1--01-430	CRANE & OPERATOR INSTALLATIONS LESS THAN 85 FT HIGH AND 22 TON 4 HR MINIMUM CH	5	hour	$ 125.00	$ 625.00	$ 125.00	$ 625.00	$ -
PNC211727 1B1--01-431	VAC TRUCK 3-PERSON CREW 4 HR MINIMUM CHARGE	100	hour	$ 300.00	$ 30,000.00	$ 300.00	$ 30,000.00	$ -
PNC211727 1B1--01-432	SMALL ALL WHEEL DRIVE OUTDOOR VACUUM SWEEPER AND OPERATOR FOR SIDEWALKS PARKIN	500	hour	$ 35.00	$ 17,500.00	$ 35.00	$ 17,500.00	$ -
PNC211727 1B1--01-433	MECHANICAL ROADWAY SWEEPER AND OPERATOR (4 HR MINIMUM CHARGE)	100	hour	$ 55.00	$ 5,500.00	$ 55.00	$ 5,500.00	$ -
PNC211727 1B1--01-434	HYDRO MOWER AND OPERATOR UP TO 20 LF DECK (4 HRS MINIMUM CHARGE)	50	hour	$ 125.00	$ 6,250.00	$ 125.00	$ 6,250.00	$ -
PNC211727 1B1--01-435	SKID STEER LOADER & OPERATOR 1850 LB MINIMUM 4 HR MINIMUM CHARGE	200	hour	$ 155.00	$ 31,000.00	$ 155.00	$ 31,000.00	$ -
PNC211727 1B1--01-436	GRAPPLE TRUCK/SELF LOADER AND OPERATOR SINGLE AXLE 16 CUBIC YARDS MINIMUM CAPA	50	hour	$ 150.00	$ 7,500.00	$ 150.00	$ 7,500.00	$ -
PNC211727 1B1--01-437	DOZER D3 & OPERATOR 4 HR MINIMUM CHARGE	20	hour	$ 80.00	$ 1,600.00	$ 80.00	$ 1,600.00	$ -
PNC211727 1B1--01-438	DOZER D4 & OPERATOR 4 HR MINIMUM CHARGE	20	hour	$ 110.00	$ 2,200.00	$ 110.00	$ 2,200.00	$ -
PNC211727 1B1--01-439	DOZER D5 & OPERATOR 4 HR MINIMUM CHARGE	20	hour	$ 115.00	$ 2,300.00	$ 115.00	$ 2,300.00	$ -
PNC211727 1B1--01-440	EXCAVATOR 30000 LB & OPERATOR 4 HR MINIMUM CHARGE	20	hour	$ 140.00	$ 2,800.00	$ 140.00	$ 2,800.00	$ -
PNC211727 1B1--01-441	EXCAVATOR 75000 LB & OPERATOR 4 HR MINIMUM CHARGE	20	hour	$ 145.00	$ 2,900.00	$ 145.00	$ 2,900.00	$ -
PNC211727 1B1--01-442	VIBRATORY ROLLER 5 TON & OPERATOR 4 HR MINIMUM CHARGE	20	hour	$ 55.00	$ 1,100.00	$ 55.00	$ 1,100.00	$ -
PNC211727 1B1--01-443	VIBRATORY ROLLER 10 TON & OPERATOR 4 HR MINIMUM CHARGE	20	hour	$ 65.00	$ 1,300.00	$ 65.00	$ 1,300.00	$ -
PNC211727 1B1--01-444	BARGE & OPERATOR 31 FT LENGTH MINIMUM 4 HR MINIMUM CHARGE	20	hour	$ 300.00	$ 6,000.00	$ 300.00	$ 6,000.00	$ -
PNC211727 1B1--01-445	BARGE WITH CRANE & OPERATOR 20 TON RATED 4 HR MINIMUM CHARGE	20	hour	$ 400.00	$ 8,000.00	$ 400.00	$ 8,000.00	$ -
PNC211727 1B1--01-446	BOAT/WATER CRAFT WITH MOTOR 30 FT LENGTH MAXIMUM 4 HR MINIMUM CHARGE	100	hour	$ 225.00	$ 22,500.00	$ 225.00	$ 22,500.00	$ -
PNC211727 1B1--01-447	DUMP TRUCK & OPERATOR SINGLE-AXLE 5 CY MINIMUM CAPACITY 4 HR MINIMUM CHARGE	20	hour	$ 50.00	$ 1,000.00	$ 50.00	$ 1,000.00	$ -
PNC211727 1B1--01-448	DUMP TRUCK & OPERATOR TRI-AXLE 16 CY MINIMUM CAPACITY 4 HR MINIMUM CHARGE	50	hour	$ 80.00	$ 4,000.00	$ 80.00	$ 4,000.00	$ -
PNC211727 1B1--01-449	TRASH TRUCK RENTAL & OPERATOR 16 YD MINIMUM VOLUME 4 HR MINIMUM CHARGE	20	hour	$ 40.00	$ 800.00	$ 40.00	$ 800.00	$ -
PNC211727 1B1--01-450	PORTABLE TOILET SINGLE STALL	200	week	$ 200.00	$ 40,000.00	$ 100.00	$ 20,000.00	$ (100.00)
PNC211727 1B1--01-451	CONDUIT FURNISH & INSTALL OPEN TRENCH	150	linear foot	$ 25.00	$ 3,750.00	$ 25.00	$ 3,750.00	$ -
PNC211727 1B1--01-452	CONDUIT FURNISH & INSTALL DIRECTIONAL BORE 6 TO < 12	50	linear foot	$ 30.00	$ 1,500.00	$ 30.00	$ 1,500.00	$ -
PNC211727 1B1--01-453	CONDUIT FURNISH & INSTALL DIRECTIONAL BORE 12 TO < 18	20	linear foot	$ 30.00	$ 600.00	$ 30.00	$ 600.00	$ -
PNC211727 1B1--01-454	CONDUIT FURNISH & INSTALL DIRECTIONAL BORE 18 TO < 24	20	linear foot	$ 50.00	$ 1,000.00	$ 50.00	$ 1,000.00	$ -
PNC211727 1B1--01-455	CONDUIT FURNISH & INSTALL DIRECTIONAL BORE 24 TO < 36	20	linear foot	$ 100.00	$ 2,000.00	$ 100.00	$ 2,000.00	$ -
PNC211727 1B1--01-456	CONDUIT FURNISH & INSTALL DIRECTIONAL BORE 36 TO < 48	20	linear foot	$ 100.00	$ 2,000.00	$ 100.00	$ 2,000.00	$ -
PNC211727 1B1--01-457	CONDUIT FURNISH & INSTALL DIRECTIONAL BORE 48 TO < 60	20	linear foot	$ 100.00	$ 2,000.00	$ 100.00	$ 2,000.00	$ -
PNC211727 1B1--01-458	CONDUIT FURNISH & INSTALL DIRECTIONAL BORE > 60	20	linear foot	$ 100.00	$ 2,000.00	$ 100.00	$ 2,000.00	$ -
PNC211727 1B1--01-459	CONDUIT FURNISH & INSTALL ABOVEGROUND	20	linear foot	$ 20.00	$ 400.00	$ 20.00	$ 400.00	$ -
PNC211727 1B1--01-460	SIGNAL CABLE NEW OR RECONSTRUCTED FURNISH & INSTALL	150	linear foot	$ 15.00	$ 2,250.00	$ 15.00	$ 2,250.00	$ -
PNC211727 1B1--01-461	SIGNAL CABLE REPAIR/ REPLACE/OTHER FURNISH & INSTALL	100	linear foot	$ 10.00	$ 1,000.00	$ 10.00	$ 1,000.00	$ -
PNC211727 1B1--01-462	SIGNAL CABLE ADJUST	100	linear foot	$ 10.00	$ 1,000.00	$ 10.00	$ 1,000.00	$ -
PNC211727 1B1--01-463	SIGNAL CABLE REMOVE	100	linear foot	$ 4.00	$ 400.00	$ 4.00	$ 400.00	$ -
PNC211727 1B1--01-464	PULL & SPLICE BOX 13 x 24 COVER SIZE	20	each	$ 1,100.00	$ 22,000.00	$ 1,100.00	$ 22,000.00	$ -
PNC211727 1B1--01-465	PULL & SPLICE BOX 13 x 24 COVER SIZE TIER 22	5	each	$ 1,200.00	$ 6,000.00	$ 1,200.00	$ 6,000.00	$ -
PNC211727 1B1--01-466	WATER METER BOX	20	each	$ 1,100.00	$ 22,000.00	$ 1,100.00	$ 22,000.00	$ -
PNC211727 1B1--01-467	PULL & SPLICE BOX INSTALL	50	each	$ 775.00	$ 38,750.00	$ 500.00	$ 25,000.00	$ (275.00)
PNC211727 1B1--01-468	PULL & SPLICE BOX RELOCATE	20	each	$ 800.00	$ 16,000.00	$ 800.00	$ 16,000.00	$ -
PNC211727 1B1--01-469	PULL & SPLICE BOX REMOVE	5	each	$ 400.00	$ 2,000.00	$ 400.00	$ 2,000.00	$ -
PNC211727 1B1--01-470	ELECTRICAL SERVICE WIRE	100	linear foot	$ 10.00	$ 1,000.00	$ 10.00	$ 1,000.00	$ -

Bid Tabulation - Best and Final Offer (BAFO) Costs Savings

Solicitation No.: PNC211727 1B1
Solicitation Title: General Roadway and Miscellaneous Construction
Using Agency: Highway and Bridge Maintenance Division
Prepared by: Netanya Hogu, Purchasing Agent

Date BAFO Posted: January 24, 2019
Date BAFO Opened: January 31, 2019
Vendors Invited: Two (2)
Responses: One (1)
Declinations: Zero (0)

				Lowest Vendor for BAFO				
				DP Development of the Treasure Coast LLC				
Item Number	Item Title	Quantity	Unit	Original Unit Price	Original Total	BAFO Unit Price	BAFO Total	Difference in BAFO Unit Price and Original Unit Price
PNC211727 1B1--01-471	ALUMINUM SIGNALS POLE PEDESTAL	1	each	$ 1,500.00	$ 1,500.00	$ 1,500.00	$ 1,500.00	$ -
PNC211727 1B1--01-472	ALUMINUM SIGNALS POLE PEDESTRIAN DETECTOR POST	1	each	$ 1,600.00	$ 1,600.00	$ 1,600.00	$ 1,600.00	$ -
PNC211727 1B1--01-473	ALUMINUM SIGNALS POLE RELOCATE	1	each	$ 1,500.00	$ 1,500.00	$ 1,500.00	$ 1,500.00	$ -
PNC211727 1B1--01-474	ALUMINUM SIGNALS POLE REMOVE	1	each	$ 300.00	$ 300.00	$ 300.00	$ 300.00	$ -
PNC211727 1B1--01-475	PEDESTRIAN SIGNAL LED COUNTDOWN 1 WAY	1	assembly	$ 1,100.00	$ 1,100.00	$ 1,100.00	$ 1,100.00	$ -
PNC211727 1B1--01-476	PEDESTRIAN SIGNAL LED-COUNT DOWN 2 WAYS	1	assembly	$ 1,750.00	$ 1,750.00	$ 1,750.00	$ 1,750.00	$ -
PNC211727 1B1--01-477	PEDESTRIAN SIGNAL RELOCATE	5	assembly	$ 500.00	$ 2,500.00	$ 500.00	$ 2,500.00	$ -
PNC211727 1B1--01-478	PEDESTRIAN SIGNAL REMOVED PEDESTRIAN SIGNAL POLE/PEDESTAL TO REMAIN	5	assembly	$ 125.00	$ 625.00	$ 125.00	$ 625.00	$ -
PNC211727 1B1--01-479	PEDESTRIAN SIGNAL LED 1 DIRECTION	2	assembly	$ 900.00	$ 1,800.00	$ 900.00	$ 1,800.00	$ -
PNC211727 1B1--01-480	PEDESTRIAN SIGNAL LED 2 DIRECTIONS	1	assembly	$ 2,500.00	$ 2,500.00	$ 2,500.00	$ 2,500.00	$ -
PNC211727 1B1--01-481	PEDESTRIAN DETECTOR STANDARD	5	each	$ 250.00	$ 1,250.00	$ 250.00	$ 1,250.00	$ -
PNC211727 1B1--01-482	PEDESTRIAN DETECTOR ACCESSIBLE	5	each	$ 1,500.00	$ 7,500.00	$ 1,500.00	$ 7,500.00	$ -
PNC211727 1B1--01-483	PEDESTRIAN DETECTOR RELOCATE	5	each	$ 225.00	$ 1,125.00	$ 225.00	$ 1,125.00	$ -
PNC211727 1B1--01-484	PEDESTRIAN DETECTOR REMOVE- POLE/PEDESTAL TO REMAIN	5	each	$ 85.00	$ 425.00	$ 85.00	$ 425.00	$ -
PNC211727 1B1--01-485	SINGLE POST SIGN GROUND MOUNT UP TO 12 SF	10	assembly	$ 800.00	$ 8,000.00	$ 800.00	$ 8,000.00	$ -
PNC211727 1B1--01-486	SINGLE POST SIGN GROUND MOUNT SLIP BASE ONLY UP TO 12 SF	5	assembly	$ 515.00	$ 2,575.00	$ 515.00	$ 2,575.00	$ -
PNC211727 1B1--01-487	SINGLE POWDER COATED POST SIGN GROUND MOUNT UP TO 12 SF	5	assembly	$ 525.00	$ 2,625.00	$ 525.00	$ 2,625.00	$ -
PNC211727 1B1--01-488	SINGLE POWDER COATED POST SIGN GROUND MOUNT SLIP BASE ONLY UP TO 12 SF	2	assembly	$ 700.00	$ 1,400.00	$ 700.00	$ 1,400.00	$ -
PNC211727 1B1--01-489	SINGLE POST SIGN GROUND MOUNT 12-20 SF	5	assembly	$ 1,500.00	$ 7,500.00	$ 1,500.00	$ 7,500.00	$ -
PNC211727 1B1--01-490	SINGLE POST SIGN GROUND MOUNT SLIP BASE ONLY 12-20 SF	2	assembly	$ 1,500.00	$ 3,000.00	$ 1,500.00	$ 3,000.00	$ -
PNC211727 1B1--01-491	SINGLE POWDER COATED POST SIGN GROUND MOUNT 12-20 SF	2	assembly	$ 1,510.00	$ 3,020.00	$ 1,510.00	$ 3,020.00	$ -
PNC211727 1B1--01-492	SINGLE POWDER COATED POST SIGN GROUND MOUNT SLIP BASE ONLY 12-20 SF	2	assembly	$ 1,100.00	$ 2,200.00	$ 1,100.00	$ 2,200.00	$ -
PNC211727 1B1--01-493	SINGLE POST SIGN GROUND MOUNT 21-30 SF	2	assembly	$ 800.00	$ 1,600.00	$ 800.00	$ 1,600.00	$ -
PNC211727 1B1--01-494	SINGLE POST SIGN GROUND MOUNT SLIP BASE ONLY 21-30 SF	2	assembly	$ 900.00	$ 1,800.00	$ 900.00	$ 1,800.00	$ -
PNC211727 1B1--01-495	SINGLE POWDER COATED POST SIGN GROUND MOUNT 21-30 SF	2	assembly	$ 900.00	$ 1,800.00	$ 900.00	$ 1,800.00	$ -
PNC211727 1B1--01-496	SINGLE POWDER COATED POST SIGN GROUND MOUNT SLIP BASE ONLY 21-30 SF	2	assembly	$ 1,100.00	$ 2,200.00	$ 1,100.00	$ 2,200.00	$ -
PNC211727 1B1--01-497	SINGLE POST SIGN GROUND MOUNT 31+ SF	2	assembly	$ 1,000.00	$ 2,000.00	$ 1,000.00	$ 2,000.00	$ -
PNC211727 1B1--01-498	SINGLE POST SIGN GROUND MOUNT SLIP BASE ONLY 31+ SF	2	assembly	$ 1,200.00	$ 2,400.00	$ 1,200.00	$ 2,400.00	$ -
PNC211727 1B1--01-499	SINGLE POWDER COATED POST SIGN GROUND MOUNT 31+ SF	2	assembly	$ 1,300.00	$ 2,600.00	$ 1,300.00	$ 2,600.00	$ -
PNC211727 1B1--01-500	SINGLE POWDER COATED POST SIGN GROUND MOUNT SLIP BASE ONLY 31+ SF	2	assembly	$ 1,500.00	$ 3,000.00	$ 1,500.00	$ 3,000.00	$ -
PNC211727 1B1--01-501	SINGLE POST SIGN GROUND MOUNT IN-STREET FLEXIBLE POST SIGN	2	assembly	$ 75.00	$ 150.00	$ 75.00	$ 150.00	$ -
PNC211727 1B1--01-502	SINGLE POST SIGN BARRIER MOUNT INDEX 11871 UP TO 12 SF	2	assembly	$ 100.00	$ 200.00	$ 100.00	$ 200.00	$ -
PNC211727 1B1--01-503	SINGLE POWDER COATED POST SIGN BARRIER MOUNT INDEX 11871 UP TO 12 SF	2	assembly	$ 1,000.00	$ 2,000.00	$ 1,000.00	$ 2,000.00	$ -
PNC211727 1B1--01-504	SINGLE POST SIGN INSTALL	5	assembly	$ 300.00	$ 1,500.00	$ 300.00	$ 1,500.00	$ -
PNC211727 1B1--01-505	SINGLE POST SIGN RELOCATE	15	assembly	$ 360.00	$ 5,400.00	$ 360.00	$ 5,400.00	$ -
PNC211727 1B1--01-506	SINGLE POST SIGN REMOVE	5	assembly	$ 135.00	$ 675.00	$ 135.00	$ 675.00	$ -
PNC211727 1B1--01-507	MULTI- POST SIGN GROUND MOUNT UP TO 50 SF	1	assembly	$ 1,000.00	$ 1,000.00	$ 1,000.00	$ 1,000.00	$ -
PNC211727 1B1--01-508	MULTI- POST SIGN GROUND MOUNT 51-100 SF	1	assembly	$ 1,200.00	$ 1,200.00	$ 1,200.00	$ 1,200.00	$ -
PNC211727 1B1--01-509	MULTI- POST SIGN GROUND MOUNT RELOCATE	1	assembly	$ 750.00	$ 750.00	$ 750.00	$ 750.00	$ -
PNC211727 1B1--01-510	MULTI- POST SIGN GROUND MOUNT REMOVE	5	assembly	$ 750.00	$ 3,750.00	$ 750.00	$ 3,750.00	$ -
PNC211727 1B1--01-511	SIGN EXISTING- REMOVE SPAN WIRE	5	assembly	$ 100.00	$ 500.00	$ 100.00	$ 500.00	$ -
PNC211727 1B1--01-512	SIGN EXISTING- REMOVE BRIDGE MOUNTED	5	assembly	$ 200.00	$ 1,000.00	$ 200.00	$ 1,000.00	$ -
PNC211727 1B1--01-513	SIGN EXISTING- RELOCATE SPAN WIRE	5	assembly	$ 85.00	$ 425.00	$ 85.00	$ 425.00	$ -
PNC211727 1B1--01-514	SIGN EXISTING- RELOCATE BRIDGE MOUNTED	5	assembly	$ 250.00	$ 1,250.00	$ 250.00	$ 1,250.00	$ -
PNC211727 1B1--01-515	SIGN PANELS 15 OR LESS	5	each	$ 195.00	$ 975.00	$ 195.00	$ 975.00	$ -
PNC211727 1B1--01-516	SIGN PANELS 16-100	5	each	$ 350.00	$ 1,750.00	$ 350.00	$ 1,750.00	$ -
PNC211727 1B1--01-517	SIGN PANELS RELOCATE 15 OR LESS	5	each	$ 85.00	$ 425.00	$ 85.00	$ 425.00	$ -
PNC211727 1B1--01-518	SIGN PANELS RELOCATE 16-100	5	each	$ 95.00	$ 475.00	$ 95.00	$ 475.00	$ -
PNC211727 1B1--01-519	SIGN PANELS REMOVE	5	each	$ 50.00	$ 250.00	$ 50.00	$ 250.00	$ -
PNC211727 1B1--01-520	SIGN FLASHING BEACON GROUND MOUNT	1	each	$ 2,000.00	$ 2,000.00	$ 2,000.00	$ 2,000.00	$ -
PNC211727 1B1--01-521	SIGN FLASHING BEACON OVERHEAD MOUNT	1	each	$ 1,600.00	$ 1,600.00	$ 1,600.00	$ 1,600.00	$ -
PNC211727 1B1--01-522	OBJECT MARKER TYPE 1	5	each	$ 60.00	$ 300.00	$ 60.00	$ 300.00	$ -
PNC211727 1B1--01-523	OBJECT MARKER TYPE 2	5	each	$ 60.00	$ 300.00	$ 60.00	$ 300.00	$ -
PNC211727 1B1--01-524	OBJECT MARKER TYPE 3	5	each	$ 60.00	$ 300.00	$ 60.00	$ 300.00	$ -
PNC211727 1B1--01-525	OBJECT MARKER TYPE 4	5	each	$ 60.00	$ 300.00	$ 60.00	$ 300.00	$ -
PNC211727 1B1--01-526	DELINEATOR FLEXIBLE TUBULAR	5	each	$ 35.00	$ 175.00	$ 35.00	$ 175.00	$ -
PNC211727 1B1--01-527	DELINEATOR NON-FLEXIBLE	5	each	$ 25.00	$ 125.00	$ 25.00	$ 125.00	$ -
PNC211727 1B1--01-528	DELINEATOR FLEXIBLE HIGH VISIBILITY MEDIAN	5	each	$ 85.00	$ 425.00	$ 85.00	$ 425.00	$ -
PNC211727 1B1--01-529	DELINEATOR FLEXIBLE HIGH PERFORMANCE 48	5	each	$ 85.00	$ 425.00	$ 85.00	$ 425.00	$ -
PNC211727 1B1--01-530	RETRO-REFLECTIVE PAVEMENT MARKERS	1000	each	$ 12.00	$ 12,000.00	$ 10.00	$ 10,000.00	$ (2.00)
PNC211727 1B1--01-531	PAINTED PAVEMENT MARKINGS STANDARD WHITE YELLOW OR BLUE SOLID 6	35000	linear foot	$ 2.50	$ 87,500.00	$ 2.25	$ 78,750.00	$ (0.25)
PNC211727 1B1--01-532	PAINTED PAVEMENT MARKINGS STANDARD WHITE OR YELLOW SOLID 8	1500	linear foot	$ 2.75	$ 4,125.00	$ 2.50	$ 3,750.00	$ (0.25)
PNC211727 1B1--01-533	PAINTED PAVEMENT MARKINGS STANDARD WHITE OR YELLOW SOLID FOR CROSSWALK	1500	linear foot	$ 3.00	$ 4,500.00	$ 2.75	$ 4,125.00	$ (0.25)
PNC211727 1B1--01-534	PAINTED PAVEMENT MARKINGS STANDARD WHITE OR YELLOW SOLID FOR DIAGONAL	150	linear foot	$ 3.50	$ 525.00	$ 3.25	$ 487.50	$ (0.25)
PNC211727 1B1--01-535	PAINTED PAVEMENT MARKINGS STANDARD WHITE OR YELLOW SOLID FOR STOP LINE	1000	linear foot	$ 4.00	$ 4,000.00	$ 3.75	$ 3,750.00	$ (0.25)
PNC211727 1B1--01-536	PAINTED PAVEMENT MARKINGS STANDARD WHITE OR YELLOW SKIP 10-30 OR 3-9 SKIP	3000	linear foot	$ 3.00	$ 9,000.00	$ 2.75	$ 8,250.00	$ (0.25)
PNC211727 1B1--01-537	PAINTED PAVEMENT MARKINGS STANDARD WHITE MESSAGE OR SYMBOL	5	each	$ 300.00	$ 1,500.00	$ 300.00	$ 1,500.00	$ -
PNC211727 1B1--01-538	PAINTED PAVEMENT MARKINGS STANDARD WHITE ARROWS	100	each	$ 300.00	$ 30,000.00	$ 200.00	$ 20,000.00	$ (100.00)
PNC211727 1B1--01-539	PAINTED PAVEMENT MARKINGS STANDARD WHITE YIELD LINE	50	linear foot	$ 2.00	$ 100.00	$ 1.75	$ 87.50	$ (0.25)
PNC211727 1B1--01-540	PAINTED PAVEMENT MARKINGS STANDARD WHITE OR YELLOW ISLAND NOSE	50	square foot	$ 5.00	$ 250.00	$ 4.75	$ 237.50	$ (0.25)
PNC211727 1B1--01-541	PAINTED PAVEMENT MARKINGS STANDARD BLACK SOLID 6	100	linear foot	$ 0.50	$ 50.00	$ 0.25	$ 25.00	$ (0.25)
PNC211727 1B1--01-542	PAINTED PAVEMENT MARKINGS STANDARD BLACK SKIP 6	100	linear foot	$ 0.50	$ 50.00	$ 0.25	$ 25.00	$ (0.25)
PNC211727 1B1--01-543	PAINTED PAVEMENT MARKINGS STANDARD BLUE MESSAGE	5	each	$ 50.00	$ 250.00	$ 50.00	$ 250.00	$ -
PNC211727 1B1--01-544	THERMOPLASTIC STANDARD WHITE SOLID 6	35000	linear foot	$ 2.75	$ 96,250.00	$ 2.50	$ 87,500.00	$ (0.25)
PNC211727 1B1--01-545	THERMOPLASTIC STANDARD WHITE SOLID 8	3000	linear foot	$ 3.25	$ 9,750.00	$ 3.00	$ 9,000.00	$ (0.25)
PNC211727 1B1--01-546	THERMOPLASTIC STANDARD WHITE SOLID FOR CROSSWALK AND ROUNDABOUT 12	3500	linear foot	$ 4.00	$ 14,000.00	$ 3.75	$ 13,125.00	$ (0.25)
PNC211727 1B1--01-547	THERMOPLASTIC STANDARD WHITE OR YELLOW SOLID FOR DIAGONAL OR CHEVRON 18	500	linear foot	$ 4.50	$ 2,250.00	$ 4.25	$ 2,125.00	$ (0.25)
PNC211727 1B1--01-548	THERMOPLASTIC STANDARD WHITE SOLID FOR STOP LINE OR CROSSWALK 24	1200	linear foot	$ 5.00	$ 6,000.00	$ 4.75	$ 5,700.00	$ (0.25)
PNC211727 1B1--01-549	THERMOPLASTIC STANDARD WHITE OR YELLOW SKIP 10-30 OR 3-9 SKIP 6	5000	linear foot	$ 3.00	$ 15,000.00	$ 2.75	$ 13,750.00	$ (0.25)
PNC211727 1B1--01-550	THERMOPLASTIC STANDARD WHITE DOTTED/GUIDELINE / 6-10 GAP EXTENSION 6	500	linear foot	$ 2.00	$ 1,000.00	$ 1.75	$ 875.00	$ (0.25)
PNC211727 1B1--01-551	THERMOPLASTIC STANDARD WHITE MESSAGE OR SYMBOL	10	each	$ 175.00	$ 1,750.00	$ 175.00	$ 1,750.00	$ -
PNC211727 1B1--01-552	THERMOPLASTIC STANDARD WHITE ARROW	100	each	$ 250.00	$ 25,000.00	$ 250.00	$ 25,000.00	$ -
PNC211727 1B1--01-553	THERMOPLASTIC STANDARD BLUE SOLID 6	30	linear foot	$ 2.00	$ 60.00	$ 2.00	$ 60.00	$ -
PNC211727 1B1--01-554	THERMOPLASTIC STANDARD BLUE MESSAGE	5	each	$ 35.00	$ 175.00	$ 35.00	$ 175.00	$ -
PNC211727 1B1--01-555	THERMOPLASTIC REMOVE EXISTING THERMOPLASTIC PAVEMENT MARKINGS	3500	square foot	$ 7.00	$ 24,500.00	$ 7.00	$ 24,500.00	$ -
PNC211727 1B1--01-556	MINIMUM CHARGE FOR STRIPING FOR EACH PROJECT	5	each	$ 2,000.00	$ 10,000.00	$ 2,000.00	$ 10,000.00	$ -
PNC211727 1B1--01-557	LIGHTING CONDUCTORS INSULATED NO. 10 OR SMALLER	100	linear foot	$ 6.00	$ 600.00	$ 6.00	$ 600.00	$ -
PNC211727 1B1--01-558	LIGHTING CONDUCTORS INSULATED NO. 8 TO NO. 6	100	linear foot	$ 6.25	$ 625.00	$ 6.25	$ 625.00	$ -
PNC211727 1B1--01-559	LIGHTING CONDUCTORS INSULATED NO. 4 TO NO. 2	100	linear foot	$ 11.00	$ 1,100.00	$ 11.00	$ 1,100.00	$ -
PNC211727 1B1--01-560	LIGHTING CONDUCTORS INSULATED NO. 1 TO NO. 0	100	linear foot	$ 13.00	$ 1,300.00	$ 13.00	$ 1,300.00	$ -
PNC211727 1B1--01-561	LIGHTING CONDUCTORS PLACE OUT OF SERVICE	100	linear foot	$ 3.00	$ 300.00	$ 3.00	$ 300.00	$ -
PNC211727 1B1--01-562	LIGHT POLE COMPLETE SPECIAL FOUNDATION WIND SPEED 150 POLE HEIGHT 40	1	each	$ 3,000.00	$ 3,000.00	$ 3,000.00	$ 3,000.00	$ -
PNC211727 1B1--01-563	LIGHT POLE COMPLETE SPECIAL FOUNDATION WIND SPEED 150 POLE HEIGHT 45	1	each	$ 3,250.00	$ 3,250.00	$ 3,250.00	$ 3,250.00	$ -
PNC211727 1B1--01-564	LIGHT POLE COMPLETE SPECIAL FOUNDATION WIND SPEED 150 POLE HEIGHT 50	1	each	$ 3,500.00	$ 3,500.00	$ 3,500.00	$ 3,500.00	$ -

Bid Tabulation - Best and Final Offer (BAFO) Costs Savings

Solicitation No.: PNC211727 1B1
Solicitation Title: General Roadway and Miscellaneous Construction
Using Agency: Highway and Bridge Maintenance Division
Prepared by: Netanya Hogu, Purchasing Agent

Date BAFO Posted: January 24, 2019
Date BAFO Opened: January 31, 2019
Vendors Invited: Two (2)
Responses: One (1)
Declinations: Zero (0)

				Lowest Vendor for BAFO				
				DP Development of the Treasure Coast LLC				
Item Number	**Item Title**	**Quantity**	**Unit**	**Original Unit Price**	**Original Total**	**BAFO Unit Price**	**BAFO Total**	**Difference in BAFO Unit Price and Original Unit Price**
PNC211727 1B1--01-565	LIGHT POLE COMPLETE WIND SPEED 150 POLE HEIGHT 40	1	each	$ 2,500.00	$ 2,500.00	$ 2,500.00	$ 2,500.00	$ -
PNC211727 1B1--01-566	LIGHT POLE COMPLETE WIND SPEED 150 POLE HEIGHT 45	1	each	$ 2,750.00	$ 2,750.00	$ 2,750.00	$ 2,750.00	$ -
PNC211727 1B1--01-567	LIGHT POLE COMPLETE WIND SPEED 150 POLE HEIGHT 50	1	each	$ 3,000.00	$ 3,000.00	$ 3,000.00	$ 3,000.00	$ -
PNC211727 1B1--01-568	LIGHT POLE COMPLETE RELOCATE	1	each	$ 1,000.00	$ 1,000.00	$ 1,000.00	$ 1,000.00	$ -
PNC211727 1B1--01-569	LIGHT POLE COMPLETE REMOVE	1	each	$ 600.00	$ 600.00	$ 600.00	$ 600.00	$ -
PNC211727 1B1--01-570	LOAD CENTER SECONDARY VOLTAGE	1	each	$ 7,500.00	$ 7,500.00	$ 7,500.00	$ 7,500.00	$ -
PNC211727 1B1--01-571	GROUND ROD	20	linear foot	$ 35.00	$ 700.00	$ 35.00	$ 700.00	$ -
PNC211727 1B1--01-572	UTILITY PIPE PVC CASING/CONDUIT 0-6	100	linear foot	$ 15.00	$ 1,500.00	$ 15.00	$ 1,500.00	$ -
PNC211727 1B1--01-573	UTILITY PIPE DI/CI WATER / SEWER 5- 7.9	5	linear foot	$ 225.00	$ 1,125.00	$ 225.00	$ 1,125.00	$ -
PNC211727 1B1--01-574	UTILITY PIPE DI/CI WATER / SEWER 8 - 19.9	5	linear foot	$ 475.00	$ 2,375.00	$ 475.00	$ 2,375.00	$ -
PNC211727 1B1--01-575	UTILITY PIPE DI/CI WATER / SEWER 20- 49.9	5	linear foot	$ 700.00	$ 3,500.00	$ 700.00	$ 3,500.00	$ -
PNC211727 1B1--01-576	UTILITY PIPE REMOVE & DISPOSE 5-7.9	20	linear foot	$ 15.00	$ 300.00	$ 15.00	$ 300.00	$ -
PNC211727 1B1--01-577	UTILITY PIPE REMOVE & DISPOSE 8-19.9	20	linear foot	$ 20.00	$ 400.00	$ 20.00	$ 400.00	$ -
PNC211727 1B1--01-578	UTILITY PIPE REMOVE & DISPOSE 20-49.9	20	linear foot	$ 25.00	$ 500.00	$ 25.00	$ 500.00	$ -
PNC211727 1B1--01-579	UTILITY FITTINGS DI/CI CAP/PLUG 5 - 7.9	5	each	$ 250.00	$ 1,250.00	$ 250.00	$ 1,250.00	$ -
PNC211727 1B1--01-580	UTILITY FITTINGS DI/CI CAP/PLUG 8 - 19.9	5	each	$ 450.00	$ 2,250.00	$ 450.00	$ 2,250.00	$ -
PNC211727 1B1--01-581	UTILITY FITTINGS DI/CI CAP/PLUG 20 - 49.9	5	each	$ 500.00	$ 2,500.00	$ 500.00	$ 2,500.00	$ -
PNC211727 1B1--01-582	UTILITY FITTINGS REMOVE & DISPOSAL	5	each	$ 25.00	$ 125.00	$ 25.00	$ 125.00	$ -
PNC211727 1B1--01-583	UTILITY FIXTURES 0 - 1.9 VALVE ASSEMBLY	5	each	$ 50.00	$ 250.00	$ 50.00	$ 250.00	$ -
PNC211727 1B1--01-584	UTILITY FIXTURES 5.0 - 7.9 TAPPING SADDLE/SLEEVE	2	each	$ 700.00	$ 1,400.00	$ 700.00	$ 1,400.00	$ -
PNC211727 1B1--01-585	UTILITY FIXTURES 5.0 - 7.9 VALVE ASSEMBLY	2	each	$ 1,200.00	$ 2,400.00	$ 1,200.00	$ 2,400.00	$ -
PNC211727 1B1--01-586	UTILITY FIXTURES 5.0 - 7.9 VAC/AIR ASSEMBLY	2	each	$ 100.00	$ 200.00	$ 100.00	$ 200.00	$ -
PNC211727 1B1--01-587	UTILITY FIXTURES 5-7.9 LINE STOP ASSEMBLY	2	each	$ 250.00	$ 500.00	$ 250.00	$ 500.00	$ -
PNC211727 1B1--01-588	UTILITY FIXTURES 5-7.9 MECHANICAL JOINT RESTRAINT	5	each	$ 250.00	$ 1,250.00	$ 250.00	$ 1,250.00	$ -
PNC211727 1B1--01-589	FIRE HYDRANT ADJUST AND MODIFY	1	each	$ 1,000.00	$ 1,000.00	$ 1,000.00	$ 1,000.00	$ -
PNC211727 1B1--01-590	FIRE HYDRANT RELOCATE	1	each	$ 750.00	$ 750.00	$ 750.00	$ 750.00	$ -
			TOTAL BID AMOUNT		**$ 11,346,782.50**		**$ 10,758,070.00**	$ (588,712.50)
			ALLOWANCES		**$ 700,000.00**		**$ 700,000.00**	
			TOTAL BID AMOUNT WITH ALLOWANCES		**$ 12,046,782.50**		**$ 11,458,070.00**	$ (588,712.50)
			VENDOR'S TOTAL REDUCTION FROM BAFO				**$ 588,712.50**	
			BID SAVINGS FROM BAFO (ORIGINAL LOW VS. BAFO LOW)				**$ 588,712.50**	

* Two vendors, DP Development of the Treasure Coast LLC (DP Development) and Weekly Asphalt Paving, Inc., were invited to the BAFO and one (1) response was recieved form DP Development.

* Purchasing performed vendor outreach by inviting both vendors through BidSync and notifying each vendor via phone call. DP Development, Inc. last viewed the solicitation on January 31, 2019 and Weekly Asphalt Paving, Inc. last viewed the solicitation on January 28, 2019.

* DP Development's original unit prices and unit prices from the BAFO have been reviewed and the BAFO unit prices are not increased from the original units price:

PNC2117271B1--01-583 General Roadway: UTILITY FIXTURES , 0 **- 1.9, VALVE ASSEMBLY**

Supplier	Unit Price	Qty/Unit	Total Price	Attch.	Docs
DP Development **[Ad]**	First Offer - $50.00	5 / each	$250.00		

Product Code: **Supplier Product Code:**
Agency Notes: **Supplier Notes:**

PNC2117271B1--01-584 General Roadway: UTILITY FIXTURES , 5.0 **- 7.9, TAPPING SADDLE/SLEEVE**

Supplier	Unit Price	Qty/Unit	Total Price	Attch.	Docs
DP Development **[Ad]**	First Offer - $700.00	2 / each	$1,400.00		

Product Code: **Supplier Product Code:**
Agency Notes: **Supplier Notes:**

PNC2117271B1--01-585 General Roadway: UTILITY FIXTURES , 5.0 **- 7.9, VALVE ASSEMBLY**

Supplier	Unit Price	Qty/Unit	Total Price	Attch.	Docs
DP Development **[Ad]**	First Offer - $1,200.00	2 / each	$2,400.00		

Product Code: **Supplier Product Code:**
Agency Notes: **Supplier Notes:**

PNC2117271B1--01-586 General Roadway: UTILITY FIXTURES , 5.0 **- 7.9, VAC/AIR ASSEMBLY**

Supplier	Unit Price	Qty/Unit	Total Price	Attch.	Docs
DP Development **[Ad]**	First Offer - $100.00	2 / each	$200.00		

Product Code: **Supplier Product Code:**
Agency Notes: **Supplier Notes:**

PNC2117271B1--01-587 General Roadway: UTILITY FIXTURES , 5**-7.9, LINE STOP ASSEMBLY**

Supplier	Unit Price	Qty/Unit	Total Price	Attch.	Docs
DP Development **[Ad]**	First Offer - $250.00	2 / each	$500.00		

Product Code: **Supplier Product Code:**
Agency Notes: **Supplier Notes:**

PNC2117271B1--01-588 General Roadway: UTILITY FIXTURES , 5**-7.9, MECHANICAL JOINT RESTRAINT**

Supplier	Unit Price	Qty/Unit	Total Price	Attch.	Docs
DP Development **[Ad]**	First Offer - $250.00	5 / each	$1,250.00		

Product Code: **Supplier Product Code:**
Agency Notes: **Supplier Notes:**

PNC2117271B1--01-589 General Roadway: FIRE HYDRANT, ADJUST AND MODIFY

Supplier	Unit Price	Qty/Unit	Total Price	Attch.	Docs
DP Development **[Ad]**	First Offer - $1,000.00	1 / each	$1,000.00		

Product Code: **Supplier Product Code:**
Agency Notes: **Supplier Notes:**

PNC2117271B1--01-590 General Roadway: FIRE HYDRANT, RELOCATE

Supplier	Unit Price	Qty/Unit	Total Price	Attch.	Docs
DP Development **[Ad]**	First Offer - $750.00	1 / each	$750.00		

Product Code: **Supplier Product Code:**
Agency Notes: **Supplier Notes:**

Supplier Totals

f DP Development [Ad] $10,758,070.00 **(590/590 items)**

Bid Contact **Marcy Cabanas**
sales@dpdevelopment.net

Address **2240 NW 22 Street**
Pompano Beach, FL 33069

	Ph 954-972-5086 **Fax 561-650-1334**		
Qualifications	SB		
Agency Notes:		**Supplier Notes:**	**Head Attch:**
Bid Allowance			$700,000.00

**

OFFICE OF ECONOMIC AND SMALL BUSINESS DEVELOPMENT
Governmental Center Annex
115 S. Andrews Avenue, Room A680 • Fort Lauderdale, Florida 33301 • 954-357-6400 • FAX 954-357-5674

MEMORANDUM

DATE: December 11, 2018

TO: Danea Cohen-Ebanks, Purchasing Agent Sr.
Purchasing Division

THRU: Sandy-Michael McDonald, Director
Office of Economic and Small Business Development

FROM: Freddy Castillo, Small Business Development Manager
Office of Economic and Small Business Development

SUBJECT: Bid No. PNC2117271B1 - General Roadway and Miscellaneous Construction
County Business Enterprise (CBE) Evaluation

The Office of Economic and Small Business Development (OESBD) conducted a review of the respondents' compliance with the CBE Program requirements for the above referenced project. An overview is provided as follows:

The CBE goal for this project: 30%

Met the CBE Requirements:

Firms		Category	Percentage
DP Development of the Treasure Coast LLC (Prime)			
FLG Services, Inc.		CBE	29.7%
Pegasus Land Surveyors, Inc.		CBE	0.5%
	Total		30.2%
Contractor's Bid Amount: $11,346,782.50			
CBE Participation Commitment: 30.2%			
FG Construction LLC (Prime)		CBE	30%
	Total		30%
Contractor's Bid Amount: $13,180,150.00			
CBE Participation Commitment: 30%			
Weekley Asphalt Paving, Inc. (Prime)			
Betancourt Construction, Inc.		CBE	30.05%
	Total		30.05%
Contractor's Bid Amount: $11,545,536.75			
CBE Participation Commitment: 30.05%			

CBE Compliance Comments:

DP Development of the Treasure Coast LLC, FG Construction LLC, and Weekley Asphalt Paving, Inc. submitted the required documentation in accordance with the solicitation's requirements and are compliant with the CBE program requirements.

cc: Maribel Feliciano, Assistant Director, OESBD
Nichole Francis, Small Business Development Specialist, OESBD

BROWARD COUNTY LOCAL BUSINESS TAX RECEIPT

115 S. Andrews Ave., Rm. A-100, Ft. Lauderdale, FL 33301-1895 – 954-831-4000

VALID OCTOBER 1, 2018 THROUGH SEPTEMBER 30, 2019

DBA:
Business Name: DP DEVELOPMENT OF THE TREASURE COAST, LLC

Owner Name: PATRICK BORRICO
Business Location: 2240 NW 22 ST POMPANO BEACH
Business Phone: 561-650-1333

Receipt #: 189-238425
Business Type: ALL OTHER TYPES CONTRACTOR (UNDERGROUND UTILITY & EXCAVATION CO)
Business Opened: 01/13/2011
State/County/Cert/Reg: CUC1224713
Exemption Code:

Rooms	Seats	Employees	Machines	Professionals
		10		

	For Vending Business Only					
	Number of Machines:			Vending Type:		
Tax Amount	Transfer Fee	NSF Fee	Penalty	Prior Years	Collection Cost	Total Paid
27.00	0.00	0.00	2.70	0.00	0.00	29.70

THIS RECEIPT MUST BE POSTED CONSPICUOUSLY IN YOUR PLACE OF BUSINESS

THIS BECOMES A TAX RECEIPT WHEN VALIDATED

This tax is levied for the privilege of doing business within Broward County and is non-regulatory in nature. You must meet all County and/or Municipality planning and zoning requirements. This Business Tax Receipt must be transferred when the business is sold, business name has changed or you have moved the business location. This receipt does not indicate that the business is legal or that it is in compliance with State or local laws and regulations.

Mailing Address:

DP DEVELOPMENT OF THE TREASURE COA.
2240 NW 22 ST
POMPANO BEACH, FL 33069

Receipt #02C-18-00000032
Paid 10/02/2018 29.70

2018 - 2019

BROWARD COUNTY FLORIDA

TO: Netanya Hogu
Purchasing Division

FROM: Anh Ton, Division Director
Highway and Bridge Maintenance Division

SUBJECT: Solicitation No.: Bid No. PNC2117271B1
General Roadway and Miscellaneous Construction

Recommended Vendor: DP Development of Treasure Coast, LLC
Recommended Group(s)/Line Item(s): All Line Items
Initial Award Amount: $11,458,070 Potential Total Amount: $34,374,210
Initial Contract Term: One Year Contract Term, including Renewals: Two Years

CONCURRENCE:

☒ The agency has reviewed Vendor's response(s) for specification compliance and Vendor responsibility. I have reviewed all documents including the Vendor Questionnaire and after careful evaluation, I concur with recommendation for award to the Vendor.

FINANCIAL BACKGROUND/D & B REPORT: (check one)

☒ I am satisfied with the Vendor's financial background and/or rating and payment performance.
☐ Not applicable Provide explanation if choosing this option

LITIGATION HISTORY: (check one)

☒ I have reviewed the Litigation History Form and there is no issue of concern.
☐ Refer to additional information from the Office of the County Attorney to address an issue/concern.

PAST PERFORMANCE: (check all that apply)

I have reviewed the Vendor's past Performance Evaluations in Contracts Central and:

☒ Vendor received an overall rating ≥ 2.59 on all evaluations.
☐ No evaluations within the past three years contained any items rated a score of 2 or less.
☐ Vendor received a rating ≤ 2.59 on an evaluation(s). Refer to additional information.
☒ Vendor received a score of ≤ 2 on an individual item(s). Refer to additional information.
☐ Past evaluations are not relevant to the scope of this contract.
☐ No past Performance Evaluations exist in Contracts Central.

AND

☒ Reference Verification Forms are attached.

OR

☐ Reference Verification Forms are not required: Commodity only purchase (less than $250,000); Service less than $50,000 and the Vendor has a Performance Evaluation within the past three years.

NON-CONCURRENCE:

☐ I do not concur. Detailed reason for non-concurrence is attached.

TYPED NAME OF SIGNER: TITLE: Director
(Individual authorized to administer the contract.)

SIGNATURE: DATE: 2/8/2019

BROWARD COUNTY FLORIDA

Vendor Reference Verification Form

Broward County Solicitation No. and Title: Bid No. PNC2117271B1 General Roadway and Miscellaneous Construction

Reference for: (Name of Firm) DP Development of the Treasure Coast, LLC

Organization/Firm Name providing reference: The Whiting-Turner Contracting Company

Contact Name/Title: Matt Moo-Young/Project Manager

Contact E-mail: matt.mooyoung@whiting-turner.com

Contact Phone: 954-776-0800

Name of Referenced Project: Northwood Phase 2 - West Palm Beach

Contract No. 16-17-417

Contract Amount: $2.6+ Million

Date Services Provided: 02/2018 to 08/2018

(list date range or date services began until "current")

Vendor's role in Project: ☐ Prime Vendor ☒ Sub-consultant/Sub-contractor

Would you use this vendor again? ☒ Yes ☐ No If No, please specify in Additional Comments (below).

Description of services provided by Vendor:

Please rate your experience with the referenced Vendor:	**Needs Improvement**	**Satisfactory**	**Excellent**	**Not Applicable**
1. Vendor's Quality of Service				
a. Responsive	☐	☐	☒	☐
b. Accuracy	☐	☒	☐	☐
c. Deliverables	☐	☒	☐	☐
2. Vendor's Organization				
a. Staff expertise	☐	☐	☒	☐
b. Professionalism	☐	☒	☐	☐
c. Turnover	☐	☒	☐	☐
3. Timeliness of:				
a. Project	☐	☒	☐	☐
b. Deliverables	☐	☒	☐	☐

Additional Comments: (provide on additional sheet if needed)

References Checked By

Name: Angela Byers Title: Administrative Officer

Division/Department: Highway and Bridge Maintenance/Publi Date of Verification: December 20, 2018

BROWARD COUNTY FLORIDA

Vendor Reference Verification Form

Broward County Solicitation No. and Title: Bid No. PNC2117271B1 General Roadway and Miscellaneous Construction

Reference for: (Name of Firm) DP Development of the Treasure Coast, LLC

Organization/Firm Name providing reference: Broward County, Highway and Bridge Maintenance Division

Contact Name/Title: Adriana Toro/Construction Project Management Supervisor

Contact E-mail: atoro@broward.org

Contact Phone: 954-357-6064

Name of Referenced Project: General Roadway Contract - Multiple Projects

Contract No. C1347414B1 and Q1001001B1

Contract Amount: $26,501,227.20 as of 12/17/18 for C1347414B1 and $26,214,537 for Q1001001B1

Date Services Provided: 12/8/2015 to Present for C1347414B1 and 6/5/12 to 9/2/15 for Q1001001B1

(list date range or date services began until "current")

Vendor's role in Project: ☒ Prime Vendor ☐ Sub-consultant/Sub-contractor

Would you use this vendor again? ☒ Yes ☐ No If No, please specify in Additional Comments (below).

Description of services provided by Vendor:

Scope includes, but is not limited to, the furnishing of all labor, materials, equipment, services and incidentals for the provision of General Roadway and Miscellaneous Construction services.

Please rate your experience with the referenced Vendor:	**Needs Improvement**	**Satisfactory**	**Excellent**	**Not Applicable**
1. Vendor's Quality of Service				
a. Responsive	☐	☒	☐	☐
b. Accuracy	☐	☒	☐	☐
c. Deliverables	☐	☒	☐	☐
2. Vendor's Organization				
a. Staff expertise	☐	☒	☐	☐
b. Professionalism	☐	☒	☐	☐
c. Turnover	☐	☒	☐	☐
3. Timeliness of:				
a. Project	☐	☒	☐	☐
b. Deliverables	☐	☒	☐	☐

Additional Comments: (provide on additional sheet if needed)

References Checked By

Name: Angela Byers Title: Administrative Officer

Division/Department: Highway and Bridge Maintenance/Publi Date of Verification: December 17, 2018

BROWARD COUNTY FLORIDA

Vendor Reference Verification Form

Broward County Solicitation No. and Title: Bid No. PNC2117271B1 General Roadway and Miscellaneous Construction

Reference for: (Name of Firm) DP Development of the Treasure Coast, LLC

Organization/Firm Name providing reference: City of Cocoa Beach

Contact Name/Title: Charlene Neuterman/Project Manager

Contact E-mail: cneuterman@ cocoafl.org

Contact Phone: 321-433-8509

Name of Referenced Project: Florida Avenue Complete Streets Project

Contract No. B-16-10-COC

Contract Amount: $3,344,221

Date Services Provided: 10/2016 to 05/2017

(list date range or date services began until "current")

Vendor's role in Project: ☒ Prime Vendor ☐ Sub-consultant/Sub-contractor

Would you use this vendor again? ☒ Yes ☐ No If No, please specify in Additional Comments (below).

Description of services provided by Vendor:

1 mile of roadway - remove old water main and replace with new water main, add reclaimed water lines connecting to main system, repair/replace damages sewer lines, repair/replace damaged storm water pipe, add new inlets for storm water drainage, construct curb, gutter and sidewalks on both sides of the road, mill and pave entire stretch and portions of side streets, supervise specialty contractors for stamped asphalt, pavedrain paver installation and specialty pedestrian paver installation. This was a Complete Streets Project funded with FHWA dollars and they satisfied the FHWA 1273 requirements.

Please rate your experience with the referenced Vendor:	Needs Improvement	Satisfactory	Excellent	Not Applicable
1. Vendor's Quality of Service				
a. Responsive	☐	☐	☒	☐
b. Accuracy	☐	☐	☒	☐
c. Deliverables	☐	☐	☒	☐
2. Vendor's Organization				
a. Staff expertise	☐	☐	☒	☐
b. Professionalism	☐	☐	☒	☐
c. Turnover	☐	☒	☐	☐
3. Timeliness of:				
a. Project	☐	☐	☒	☐
b. Deliverables	☐	☐	☒	☐

Additional Comments: (provide on additional sheet if needed)

They finished a very difficult project on schedule and had minimal traffic interruptions. The work was done during the day and they worked with all businesses and residents to ensure few interruptions. Great company to work with.

References Checked By

Name: Angela Byers Title: Administrative Officer

Division/Department: Highway and Bridge Maintenance/Publi Date of Verification: December 26, 2018

PRICE ANALYSIS

Solicitation No.: BLD2117271B1
Solicitation Title: General Roadway and Miscellaneous Construction
Using Agency: Highway and Bridge Maintenance Division
Purchasing Agent: Netanya Hogu

Date Bid Posted: October 25, 2018
Date Bid Opened: November 26, 2018
Bid Submittals: 3
Declinations: 0

BROWARD COUNTY FLORIDA Purchasing Division www.broward.org/purchasing

Line Items				DP Development of Trasure Coast, LLC Solicitation No. PNC2117271B1 (Best and Final Offer)		DP Development of Trasure Coast, LLC Contract No. C1347414B1				
Item No.	Item Description	Quantity	Unit of Measure	Unit Price	Total Price	Quantity	Unit of Measure	Unit Price	Total Price	Unit Price and Total Percentage Difference
PNC2117271B1--01-01	MOBILIZATION - NIGHT WORK PER PROJECT	10	each	$ 1,000.00	$ 10,000.00	110	each	$ 2,000.00	$ 220,000.00	-50%
PNC2117271B1--01-02	MOBILIZATION - MOBILIZE WITHIN 24 HR PER PROJECT	5	each	$ 500.00	$ 2,500.00	10	each	$ 200.00	$ 2,000.00	150%
PNC2117271B1--01-03	MOBILIZATION - MOBILIZE WITHIN 4 HR PER PROJECT	5	each	$ 500.00	$ 2,500.00	10	each	$ 200.00	$ 2,000.00	150%
PNC2117271B1--01-04	COMMERCIAL MATERIAL FOR TEMPORARY DRIVEWAY MAINTENANCE	10	cubic yard	$ 25.00	$ 250.00	200	cubic yard	$ 10.00	$ 2,000.00	150%
PNC2117271B1--01-05	TRAFFIC CONTROL OFFICER	500	hour	$ 80.00	$ 40,000.00	660	hour	$ 65.00	$ 42,900.00	23%
PNC2117271B1--01-06	WORK ZONE SIGN	8000	day	$ 7.00	$ 56,000.00	8000	day	$ 5.00	$ 40,000.00	40%
PNC2117271B1--01-07	BUSINESS SIGN	5	day	$ 7.00	$ 35.00	100	day	$ 5.00	$ 500.00	40%
PNC2117271B1--01-08	BARRIER WALL TEMPORARY CONCRETE UP TO 30 DAYS	500	linear foot	$ 25.00	$ 12,500.00	200	linear foot	$ 45.00	$ 9,000.00	-44%
PNC2117271B1--01-09	BARRIER WALL TEMPORARY WATERFILLED UP TO 30 DAYS	2500	linear foot	$ 50.00	$ 125,000.00	1000	linear foot	$ 55.00	$ 55,000.00	-9%
PNC2117271B1--01-10	BARRIER WALL TEMPORARY LOW PROFILE CONCRETE UP TO 30 DAYS	50	linear foot	$ 10.00	$ 500.00	200	linear foot	$ 15.00	$ 3,000.00	-33%
PNC2117271B1--01-11	BARRIER WALL TEMPORARY TYPE K UP TO 30 DAYS	50	linear foot	$ 10.00	$ 500.00	200	linear foot	$ 20.00	$ 4,000.00	-50%
PNC2117271B1--01-12	BARRIER WALL TEMPORARY RELOCATE CONCRETE	2000	linear foot	$ 7.50	$ 15,000.00	200	linear foot	$ 12.00	$ 2,400.00	-38%
PNC2117271B1--01-13	BARRIER WALL TEMPORARY RELOCATE WATERFILLED	7000	linear foot	$ 30.00	$ 210,000.00	1000	linear foot	$ 35.00	$ 35,000.00	-14%
PNC2117271B1--01-14	BARRIER WALL TEMPORARY RELOCATE LOW PROFILE CONCRETE	50	linear foot	$ 7.50	$ 375.00	200	linear foot	$ 5.00	$ 1,000.00	50%
PNC2117271B1--01-15	BARRIER WALL TEMPORARY RELOCATE TYPE K	50	linear foot	$ 7.50	$ 375.00	200	linear foot	$ 10.00	$ 2,000.00	-25%
PNC2117271B1--01-16	CHANNELIZING DEVICE TYPES I II DI VP DRUM OR LCD	25000	day	$ 7.00	$ 175,000.00	15000	day	$ 5.00	$ 75,000.00	40%
PNC2117271B1--01-17	CHANNELIZING DEVICE TYPE III 6	10	day	$ 7.00	$ 70.00	2000	day	$ 4.00	$ 8,000.00	75%
PNC2117271B1--01-18	CHANNELIZING DEVICE-PEDESTRIAN LCD (LONGITUDINAL CHANNELIZING DEVICE)	1500	day	$ 5.00	$ 7,500.00	2000	day	$ 4.00	$ 8,000.00	25%
PNC2117271B1--01-19	TRAFFIC CONES	15000	day	$ 7.00	$ 105,000.00	5000	day	$ 5.00	$ 25,000.00	40%
PNC2117271B1--01-20	TUBULAR MARKER	5	day	$ 1.00	$ 5.00	2000	day	$ 1.00	$ 2,000.00	0%
PNC2117271B1--01-21	ARROW BOARD / ADVANCE WARNING ARROW PANEL	500	day	$ 85.00	$ 42,500.00	500	day	$ 60.00	$ 30,000.00	42%
PNC2117271B1--01-22	HIGH INTENSITY FLASHING LIGHTS, TEMPORARY, TYPE B, F&I	Line Item Not Included in Solicitation				2000	day	$ 1.00	$ 2,000.00	
PNC2117271B1--01-23	LIGHTS, BARRIER WALL MOUNT, TEMPORARY, TYPE C, STEADY BRUN, F&I	Line Item Not Included in Solicitation				2000	day	$ 3.50	$ 7,000.00	
PNC2117271B1--01-24	TEMPORARY RETROREFLECTIVE PAVEMENT MARKER	10	each	$ 5.00	$ 50.00	200	each	$ 5.00	$ 1,000.00	0%
PNC2117271B1--01-25	TEMPORARY CRASH CUSHION REDIRECTIVE OPTION UP TO 30 DAYS	5	lot	$ 250.00	$ 1,250.00	10	lot	$ 250.00	$ 2,500.00	0%
PNC2117271B1--01-26	BARRICADE TYPE III -TO REMAIN 6	500	each	$ 2.00	$ 1,000.00	10	each	$ 50.00	$ 500.00	-96%
PNC2117271B1--01-27	PORTABLE CHANGEABLE MESSAGE SIGN TEMPORARY	200	day	$ 120.00	$ 24,000.00	1000	day	$ 100.00	$ 100,000.00	20%
PNC2117271B1--01-28	PORTABLE REGULATORY SIGN	5	day	$ 2.50	$ 12.50	100	day	$ 5.00	$ 500.00	-50%
PNC2117271B1--01-29	PAVEMENT MARKING REMOVABLE TAPE WHITE-BLACK SKIP	100	linear foot	$ 0.50	$ 50.00	1100	linear foot	$ 0.50	$ 550.00	0%
PNC2117271B1--01-30	PAVEMENT MARKING REMOVABLE TAPE WHITE-BLACK SOLID	100	linear foot	$ 0.50	$ 50.00	1100	linear foot	$ 0.50	$ 550.00	0%
PNC2117271B1--01-31	PAVEMENT MARKING REMOVABLE TAPE WHITE-BLACK OTHER	100	square foot	$ 0.50	$ 50.00	1100	square foot	$ 0.50	$ 550.00	0%
PNC2117271B1--01-32	PAVEMENT MARKING REMOVABLE TAPE YELLOW SOLID	100	linear foot	$ 0.50	$ 50.00	1100	linear foot	$ 0.50	$ 550.00	0%
PNC2117271B1--01-33	LIGHT TOWER AMIDA / TEREX AL4000 OR EQUIVALENT	100	day	$ 300.00	$ 30,000.00	50	day	$ 350.00	$ 17,500.00	-14%
PNC2117271B1--01-34	FDOT CERTIFIED FLAG PERSON	3000	hour	$ 55.00	$ 165,000.00	1100	hour	$ 40.00	$ 44,000.00	38%
PNC2117271B1--01-35	ORANGE PLASTIC MESH AND POST UP TO 30 DAYS	500	linear foot	$ 5.00	$ 2,500.00	3100	linear foot	$ 5.00	$ 15,500.00	0%
PNC2117271B1--01-36	ARTIFICIAL COVERINGS /ROLLED EROSION CONTROL PRODUCTS	50	square yard	$ 6.00	$ 300.00	220	square yard	$ 15.00	$ 3,300.00	-60%
PNC2117271B1--01-37	SEDIMENT BARRIER	5000	linear foot	$ 3.50	$ 17,500.00	3500	linear foot	$ 4.00	$ 14,000.00	-13%
PNC2117271B1--01-38	FLOATING TURBIDITY BARRIER	200	linear foot	$ 11.00	$ 2,200.00	2000	linear foot	$ 7.00	$ 14,000.00	57%
PNC2117271B1--01-39	STAKED TURBIDITY BARRIER - NYLON REINFORCED PVC	100	linear foot	$ 4.00	$ 400.00	500	linear foot	$ 2.00	$ 1,000.00	100%
PNC2117271B1--01-40	SOIL TRACKING PREVENTION DEVICE	5	each	$ 75.00	$ 375.00	20	each	$ 100.00	$ 2,000.00	-25%
PNC2117271B1--01-41	INLET PROTECTION SYSTEM	300	each	$ 200.00	$ 60,000.00	70	each	$ 300.00	$ 21,000.00	-33%
PNC2117271B1--01-42	LITTER REMOVAL AND DISPOSAL	5	acre	$ 100.00	$ 500.00	400	acre	$ 20.00	$ 8,000.00	400%
PNC2117271B1--01-43	MOWING LESS THAN 24 INCHES TALL 1 ACRES MINIMUM CHARGE	5	acre	$ 100.00	$ 500.00	400	acre	$ 100.00	$ 40,000.00	0%
PNC2117271B1--01-44	MOWING TALLER THAN 24 INCHES 1 ACRES MINIMUM CHARGE	5	acre	$ 150.00	$ 750.00	New Line Item				
PNC2117271B1--01-45	MOWING TRIMMING EDGING WEEDING AND TRASH PICK-UP	10000	square yard	$ 0.50	$ 5,000.00	New Line Item				
PNC2117271B1--01-46	SURVEY WORK SIGNED & SEALED DRAWINGS	150	hour	$ 180.00	$ 27,000.00	200	hour	$ 100.00	$ 20,000.00	80%
PNC2117271B1--01-47	SURVEY FIELD WORK 3-PERSON CREW	200	hour	$ 180.00	$ 36,000.00	400	hour	$ 100.00	$ 40,000.00	80%
PNC2117271B1--01-48	UTILITY LOCATING AND EXCAVATION TEST HOLE 0-4 DEPTH	5	each	$ 850.00	$ 4,250.00	15	each	$ 600.00	$ 9,000.00	42%
PNC2117271B1--01-49	UTILITY LOCATING AND EXCAVATION TEST HOLE 4-8 DEPTH	5	each	$ 850.00	$ 4,250.00	10	each	$ 700.00	$ 7,000.00	21%
PNC2117271B1--01-50	CURB OR CURB AND GUTTER REMOVAL	4000	linear foot	$ 24.00	$ 96,000.00	5000	linear foot	$ 20.00	$ 100,000.00	20%
PNC2117271B1--01-51	CONCRETE SIDEWALK AND PAVEMENT REMOVAL	12000	square yard	$ 30.00	$ 360,000.00	500	square yard	$ 24.00	$ 12,000.00	25%
PNC2117271B1--01-52	REMOVAL OF EXISTING CONCRETE PAVEMENT	1000	square yard	$ 10.00	$ 10,000.00	6600	square yard	$ 10.00	$ 66,000.00	0%
PNC2117271B1--01-53	REMOVAL AND DISPOSAL OF UNSUITABLE NON-CONTAMINATED MATERIALS	150	cubic yard	$ 20.00	$ 3,000.00	1600	cubic yard	$ 22.00	$ 35,200.00	-9%
PNC2117271B1--01-54	REGULAR EXCAVATION	15000	cubic yard	$ 25.00	$ 375,000.00	5000	cubic yard	$ 30.00	$ 150,000.00	-17%
PNC2117271B1--01-55	LATERAL DITCH EXCAVATION	100	cubic yard	$ 4.00	$ 400.00	1000	cubic yard	$ 4.00	$ 4,000.00	0%
PNC2117271B1--01-56	SUBSOIL EXCAVATION	100	cubic yard	$ 8.00	$ 800.00	3100	cubic yard	$ 8.00	$ 24,800.00	0%
PNC2117271B1--01-57	CHANNEL EXCAVATION	50	cubic yard	$ 35.00	$ 1,750.00	300	cubic yard	$ 45.00	$ 13,500.00	-22%
PNC2117271B1--01-58	EMBANKMENT	3000	cubic yard	$ 23.00	$ 69,000.00	5000	cubic yard	$ 23.00	$ 115,000.00	0%
PNC2117271B1--01-59	GRAVEL FILL	50	cubic yard	$ 17.00	$ 850.00	250	cubic yard	$ 15.00	$ 3,750.00	13%
PNC2117271B1--01-60	2" BROWN RIVER ROCK	20	cubic yard	$ 40.00	$ 800.00	50	cubic yard	$ 40.00	$ 2,000.00	0%
PNC2117271B1--01-61	FLOWABLE FILL	1500	cubic yard	$ 200.00	$ 300,000.00	400	cubic yard	$ 200.00	$ 80,000.00	0%
PNC2117271B1--01-62	FLOWABLE FINE GROUT 3000 PSI	20	cubic yard	$ 215.00	$ 4,300.00	300	cubic yard	$ 100.00	$ 30,000.00	115%
PNC2117271B1--01-63	FILL SAND	50	cubic yard	$ 20.00	$ 1,000.00	300	cubic yard	$ 20.00	$ 6,000.00	0%
PNC2117271B1--01-64	GEOSYNTHETIC REINFORCED SOIL SLOPE	50	square foot	$ 14.00	$ 700.00	200	square foot	$ 14.00	$ 2,800.00	0%
PNC2117271B1--01-65	TYPE B STABILIZATION	5000	square yard	$ 15.00	$ 75,000.00	600	square yard	$ 120.00	$ 72,000.00	-88%
PNC2117271B1--01-66	PREPARE SOIL LAYER FINISH SOIL LAYER 6"	100	square yard	$ 4.00	$ 400.00	250	square yard	$ 4.00	$ 1,000.00	0%
PNC2117271B1--01-67	PREPARED SOIL LAYER ORGANIC SOIL LAYER 6	100	square yard	$ 5.00	$ 500.00	1200	square yard	$ 10.00	$ 12,000.00	-50%
PNC2117271B1--01-68	REWORKING LIMEROCK BASE 6	30	square yard	$ 5.00	$ 150.00	2600	square yard	$ 2.00	$ 5,200.00	150%
PNC2117271B1--01-69	REWORKING LIMEROCK BASE 4	20	square yard	$ 5.00	$ 100.00	1000	square yard	$ 2.00	$ 2,000.00	150%
PNC2117271B1--01-70	REWORKING LIMEROCK BASE 3	20	square yard	$ 5.00	$ 100.00	1000	square yard	$ 1.00	$ 1,000.00	400%
PNC2117271B1--01-71	LIMEROCK NEW MATERIAL FOR REWORKING BASE	20	cubic yard	$ 35.00	$ 700.00	1000	cubic yard	$ 30.00	$ 30,000.00	17%
PNC2117271B1--01-72	OPTIONAL BASE BASE GROUP 03	2000	square yard	$ 3.00	$ 6,000.00	1000	square yard	$ 3.00	$ 3,000.00	0%
PNC2117271B1--01-73	OPTIONAL BASE BASE GROUP 04	2000	square yard	$ 3.50	$ 7,000.00	1000	square yard	$ 3.50	$ 3,500.00	0%
PNC2117271B1--01-74	OPTIONAL BASE BASE GROUP 05	2000	square yard	$ 4.00	$ 8,000.00	1000	square yard	$ 4.00	$ 4,000.00	0%
PNC2117271B1--01-75	OPTIONAL BASE BASE GROUP 06	2000	square yard	$ 20.00	$ 40,000.00	1000	square yard	$ 20.00	$ 20,000.00	0%
PNC2117271B1--01-76	OPTIONAL BASE BASE GROUP 07	2000	square yard	$ 4.75	$ 9,500.00	1000	square yard	$ 5.75	$ 5,750.00	-17%
PNC2117271B1--01-77	OPTIONAL BASE BASE GROUP 08	2000	square yard	$ 6.00	$ 12,000.00	1000	square yard	$ 7.00	$ 7,000.00	-14%
PNC2117271B1--01-78	OPTIONAL BASE BASE GROUP 09	2000	square yard	$ 14.00	$ 28,000.00	1000	square yard	$ 20.00	$ 20,000.00	-30%
PNC2117271B1--01-79	OPTIONAL BASE BASE GROUP 10	2000	square yard	$ 11.00	$ 22,000.00	1000	square yard	$ 12.00	$ 12,000.00	-8%
PNC2117271B1--01-80	OPTIONAL BASE BASE GROUP 11	8000	square yard	$ 25.00	$ 200,000.00	1500	square yard	$ 25.00	$ 37,500.00	0%
PNC2117271B1--01-81	OPTIONAL BASE BASE GROUP 12	2000	square yard	$ 15.00	$ 30,000.00	1000	square yard	$ 20.50	$ 20,500.00	-27%
PNC2117271B1--01-82	OPTIONAL BASE BASE GROUP 13	2000	square yard	$ 17.00	$ 34,000.00	1000	square yard	$ 21.00	$ 21,000.00	-19%
PNC2117271B1--01-83	OPTIONAL BASE BASE GROUP 14	2000	square yard	$ 19.00	$ 38,000.00	1000	square yard	$ 21.50	$ 21,500.00	-12%
PNC2117271B1--01-84	OPTIONAL BASE BASE GROUP 15	2000	square yard	$ 21.00	$ 42,000.00	1000	square yard	$ 21.75	$ 21,750.00	-3%
PNC2117271B1--01-85	OPTIONAL BASE BASE GROUP 15 ASPHALT BASE OPTION ONLY	2000	square yard	$ 23.00	$ 46,000.00	1000	square yard	$ 30.00	$ 30,000.00	-23%
PNC2117271B1--01-86	TURNOUT CONSTRUCTION	200	square yard	$ 10.00	$ 2,000.00	300	square yard	$ 10.00	$ 3,000.00	0%

PNC2117271B1--01-87	CEMENT TREATED PERMEABLE BASE	20	cubic yard	$ 21.00	$ 420.00	300	cubic yard	$ 21.00	$ 6,300.00	0%
PNC2117271B1--01-88	MILLING EXIST ASPH PAVT 1 AVG DEPTH AREA <10,000 SY	12000	square yard	$ 4.00	$ 48,000.00	4000	square yard	$ 2.75	$ 11,000.00	45%
PNC2117271B1--01-89	MILLING EXIST ASPH PAVT 1 AVG DEPTH AREA >10,000 SY	Line Item Not Included in Solicitation				4000	square yard	$ 2.75	$ 11,000.00	
PNC2117271B1--01-90	MILLING EXIST ASPH PAVT 3 AVG DEPTH	1200	square yard	$ 5.00	$ 6,000.00	3000	square yard	$ 2.75	$ 8,250.00	82%
PNC2117271B1--01-91	MILLING EXIST ASPH PAVT 2 AVG DEPTH AREA <10,000 SY	1000	square yard	$ 5.00	$ 5,000.00	3000	square yard	$ 2.75	$ 8,250.00	82%
PNC2117271B1--01-92	MILLING EXIST ASPH PAVT 2 AVG DEPTH AREA >10,000 SY	Line Item Not Included in Solicitation				10000	square yard	$ 2.75	$ 27,500.00	
PNC2117271B1--01-93	MILLING EXIST ASPH PAVT 1 1/2 AVG DEPTH AREA <10,000 SY	1000	square yard	$ 5.00	$ 5,000.00	4000	square yard	$ 2.75	$ 11,000.00	82%
PNC2117271B1--01-94	MILLING EXIST ASPH PAVT 1 1/2 AVG DEPTH AREA >10,000 SY	Line Item Not Included in Solicitation				20000	square yard	$ 2.75	$ 55,000.00	
PNC2117271B1--01-95	MILLING EXIST ASPH PAVT 2 1/2 AVG DEPTH	1000	square yard	$ 5.00	$ 5,000.00	3000	square yard	$ 2.00	$ 6,000.00	150%
PNC2117271B1--01-96	MILLING EXIST ASPH PAVT 1/2 AVG DEPTH	500	square yard	$ 5.00	$ 2,500.00	2000	square yard	$ 1.50	$ 3,000.00	233%
PNC2117271B1--01-97	MILLING EXIST ASPH PAVT 3/4 AVG DEPTH	500	square yard	$ 5.00	$ 2,500.00	2000	square yard	$ 1.75	$ 3,500.00	186%
PNC2117271B1--01-98	TYPE S ASPHALTIC CONCRETE	50	ton	$ 180.00	$ 9,000.00	1500	ton	$ 180.00	$ 270,000.00	0%
PNC2117271B1--01-99	TEMPORARY PATCH USING COLD ASPHALTIC MIX	50	cubic foot	$ 50.00	$ 2,500.00	100	cubic foot	$ 25.00	$ 2,500.00	100%
PNC2117271B1--01-100	SUPERPAVE ASPHALTIC CONCRETE TRAFFIC A B C D OR E LESS THAN 100 TON	1500	ton	$ 190.00	$ 285,000.00	200	ton	$ 200.00	$ 40,000.00	-5%
PNC2117271B1--01-101	SUPERPAVE ASPHALTIC CONCRETE TRAFFIC A B C D OR E 101 to 500 TON	1500	ton	$ 190.00	$ 285,000.00	500	ton	$ 175.00	$ 87,500.00	9%
PNC2117271B1--01-102	SUPERPAVE ASPHALTIC CONCRETE TRAFFIC A B C D OR E GREATER THAN OR EQUAL TO	1500	ton	$ 190.00	$ 285,000.00	2000	ton	$ 170.00	$ 340,000.00	12%
PNC2117271B1--01-103	SUPERPAVE ASPHALTIC CONCRETE TRAFFIC B C D OR E PG76-22 PMA	50	ton	$ 150.00	$ 7,500.00	500	ton	$ 150.00	$ 75,000.00	0%
PNC2117271B1--01-104	ASPHALT CONCRETE FRICTION COURSE TRAFFIC B C OR D FC-9.5 OR 12.5 PG 76-22 LESS THAN 500 TON	50	ton	$ 200.00	$ 10,000.00	300	ton	$ 220.00	$ 66,000.00	-9%
PNC2117271B1--01-105	ASPHALT CONCRETE FRICTION COURSE TRAFFIC B C OR D FC-9.5 OR 12.5 PG 76-22 GREATER THAN OR EQUAL 500 TON	Line Item Not Included in Solicitation				500	ton	$ 210.00	$ 105,000.00	
PNC2117271B1--01-106	ASPHALT CONCRETE FRICTION COURSE TRAFFIC B OR C FC-9.5 OR 12.5 PG 76-22 ARB LESS THAN 500 TON	50	ton	$ 250.00	$ 12,500.00	300	ton	$ 220.00	$ 66,000.00	14%
PNC2117271B1--01-107	ASPHALT CONCRETE FRICTION COURSE TRAFFIC B OR C FC-9.5 OR 12.5 PG 76-22 ARB, GREATER THAN OR EQUAL 500 TON	Line Item Not Included in Solicitation				500	ton	$ 210.00	$ 105,000.00	
PNC2117271B1--01-108	MISCELLANEOUS ASPHALT PAVEMENT	100	ton	$ 160.00	$ 16,000.00	120	ton	$ 160.00	$ 19,200.00	0%
PNC2117271B1--01-109	CLEANING AND SEALING JOINTS- CONCRETE PAVEMENT	100	linear foot	$ 1.50	$ 150.00	500	linear foot	$ 2.00	$ 1,000.00	-25%
PNC2117271B1--01-110	CLEANING AND SEALING RANDOM CRACKS-EXISTING CONCRETE PAVEMENT	100	linear foot	$ 3.00	$ 300.00	500	linear foot	$ 3.00	$ 1,500.00	0%
PNC2117271B1--01-111	GRINDING CONCRETE PAVEMENT	100	square yard	$ 3.00	$ 300.00	500	square yard	$ 4.00	$ 2,000.00	-25%
PNC2117271B1--01-112	CONCRETE CLASS NS GRAVITY WALL	150	cubic yard	$ 50.00	$ 7,500.00	10	cubic yard	$ 125.00	$ 1,250.00	-60%
PNC2117271B1--01-113	CONCRETE CLASS I ENDWALLS	100	cubic yard	$ 50.00	$ 5,000.00	20	cubic yard	$ 125.00	$ 2,500.00	-60%
PNC2117271B1--01-114	CONCRETE CLASS I RETAINING WALLS	120	cubic yard	$ 50.00	$ 6,000.00	20	cubic yard	$ 125.00	$ 2,500.00	-60%
PNC2117271B1--01-115	CONCRETE CLASS I MASS SUBSTRUCTURE	150	cubic yard	$ 50.00	$ 7,500.00	20	cubic yard	$ 125.00	$ 2,500.00	-60%
PNC2117271B1--01-116	CONCRETE CLASS I	50	cubic yard	$ 50.00	$ 2,500.00	20	cubic yard	$ 125.00	$ 2,500.00	-60%
PNC2117271B1--01-117	CONCRETE CLASS II CULVERTS	120	cubic yard	$ 50.00	$ 6,000.00	20	cubic yard	$ 125.00	$ 2,500.00	-60%
PNC2117271B1--01-118	CONCRETE CLASS II ENDWALLS	120	cubic yard	$ 50.00	$ 6,000.00	20	cubic yard	$ 150.00	$ 3,000.00	-67%
PNC2117271B1--01-119	CONCRETE CLASS II SUPERSTRUCTURE SUBSTRUCTURE BULKHEAD APPROACH SLABS TRENC	110	cubic yard	$ 50.00	$ 5,500.00	20	cubic yard	$ 150.00	$ 3,000.00	-67%
PNC2117271B1--01-120	CONCRETE CLASS II RETAINING WALLS	120	cubic yard	$ 50.00	$ 6,000.00	20	cubic yard	$ 175.00	$ 3,500.00	-71%
PNC2117271B1--01-121	CONCRETE CLASS II	120	cubic yard	$ 50.00	$ 6,000.00	20	cubic yard	$ 130.00	$ 2,600.00	-62%
PNC2117271B1--01-122	CONCRETE CLASS III	120	cubic yard	$ 50.00	$ 6,000.00	20	cubic yard	$ 135.00	$ 2,700.00	-63%
PNC2117271B1--01-123	CONCRETE CLASS IV	120	cubic yard	$ 50.00	$ 6,000.00	50	cubic yard	$ 140.00	$ 7,000.00	-64%
PNC2117271B1--01-124	CONCRETE CLASS IV BULKHEAD	120	cubic yard	$ 50.00	$ 6,000.00	50	cubic yard	$ 175.00	$ 8,750.00	-71%
PNC2117271B1--01-125	CONCRETE CLASS V	120	cubic yard	$ 50.00	$ 6,000.00	20	cubic yard	$ 165.00	$ 3,300.00	-70%
PNC2117271B1--01-126	CONCRETE CLASS VI	120	cubic yard	$ 50.00	$ 6,000.00	20	cubic yard	$ 175.00	$ 3,500.00	-71%
PNC2117271B1--01-127	CONCRETE FOR JOINT REPAIRS	5	cubic yard	$ 50.00	$ 250.00	20	cubic yard	$ 150.00	$ 3,000.00	-67%
PNC2117271B1--01-128	EPOXY CONCRETE OVERLAY- STRUCTURES REHAB	5	square yard	$ 100.00	$ 500.00	50	square yard	$ 100.00	$ 5,000.00	0%
PNC2117271B1--01-129	RESTORE SPALLED AREAS EPOXY	5	cubic foot	$ 100.00	$ 500.00	40	cubic foot	$ 100.00	$ 4,000.00	0%
PNC2117271B1--01-130	EPOXY MATERIAL FOR CRACK INJECTION- STRUCTURES REHAB	5	gallon	$ 150.00	$ 750.00	10	gallon	$ 150.00	$ 1,500.00	0%
PNC2117271B1--01-131	CRACKS INJECT AND SEAL- STRUCTURES REHAB	100	linear foot	$ 50.00	$ 5,000.00	250	linear foot	$ 20.00	$ 5,000.00	150%
PNC2117271B1--01-132	CONCRETE SEAWALL SURFACES CLEANING (PRESSURE WASH) BELOW WATER 10000 PSI 4 HR	10	hour	$ 50.00	$ 500.00	300	hour	$ 50.00	$ 15,000.00	0%
PNC2117271B1--01-133	CONCRETE (SIDEWALK CURB GUTTER) SURFACES CLEANING (PRESSURE WASH)	500	square yard	$ 1.00	$ 500.00	200000	square yard	$ 0.25	$ 50,000.00	300%
PNC2117271B1--01-134	REINFORCING STEEL	2000	pound	$ 5.00	$ 10,000.00	8700	pound	$ 3.00	$ 26,100.00	67%
PNC2117271B1--01-135	REINFORCING STEEL SUPERSTRUCTURE AND SUBSTRUCTURE	100	pound	$ 5.00	$ 500.00	400	pound	$ 2.00	$ 800.00	150%
PNC2117271B1--01-136	INLETS CURB TYPE 9 <10	5	each	$ 650.00	$ 3,250.00	5	each	$ 1,000.00	$ 5,000.00	-35%
PNC2117271B1--01-137	INLETS CURB TYPE 9 PARTIAL	5	each	$ 500.00	$ 2,500.00	5	each	$ 500.00	$ 2,500.00	0%
PNC2117271B1--01-138	INLETS CURB TYPE 10 <10	5	each	$ 650.00	$ 3,250.00	5	each	$ 1,000.00	$ 5,000.00	-35%
PNC2117271B1--01-139	INLETS CURB TYPE 10 PARTIAL	5	each	$ 500.00	$ 2,500.00	5	each	$ 500.00	$ 2,500.00	0%
PNC2117271B1--01-140	INLETS CURB TYPE P-1 <10	5	each	$ 650.00	$ 3,250.00	5	each	$ 750.00	$ 3,750.00	-13%
PNC2117271B1--01-141	INLETS CURB TYPE P-1 PARTIAL	5	each	$ 500.00	$ 2,500.00	5	each	$ 500.00	$ 2,500.00	0%
PNC2117271B1--01-142	INLETS CURB TYPE P-2 <10	5	each	$ 650.00	$ 3,250.00	5	each	$ 750.00	$ 3,750.00	-13%
PNC2117271B1--01-143	INLETS CURB TYPE P-2 >10	5	each	$ 650.00	$ 3,250.00	5	each	$ 1,000.00	$ 5,000.00	-35%
PNC2117271B1--01-144	INLETS CURB TYPE P-2 PARTIAL	5	each	$ 500.00	$ 2,500.00	5	each	$ 500.00	$ 2,500.00	0%
PNC2117271B1--01-145	INLETS CURB TYPE P-3 <10	5	each	$ 650.00	$ 3,250.00	5	each	$ 1,000.00	$ 5,000.00	-35%
PNC2117271B1--01-146	INLETS CURB TYPE P-3 PARTIAL	5	each	$ 500.00	$ 2,500.00	5	each	$ 500.00	$ 2,500.00	0%
PNC2117271B1--01-147	INLETS CURB TYPE P-4 <10	5	each	$ 650.00	$ 3,250.00	5	each	$ 1,000.00	$ 5,000.00	-35%
PNC2117271B1--01-148	INLETS CURB TYPE P-4 PARTIAL	5	each	$ 500.00	$ 2,500.00	5	each	$ 500.00	$ 2,500.00	0%
PNC2117271B1--01-149	INLETS CURB TYPE P-5 <10	5	each	$ 650.00	$ 3,250.00	5	each	$ 1,500.00	$ 7,500.00	-57%
PNC2117271B1--01-150	INLETS CURB TYPE P-5 >10	5	each	$ 650.00	$ 3,250.00	5	each	$ 1,750.00	$ 8,750.00	-63%
PNC2117271B1--01-151	INLETS CURB TYPE P-5 PARTIAL	5	each	$ 650.00	$ 3,250.00	5	each	$ 1,000.00	$ 5,000.00	-35%
PNC2117271B1--01-152	INLETS CURB TYPE P-6 <10	5	each	$ 650.00	$ 3,250.00	5	each	$ 1,500.00	$ 7,500.00	-57%
PNC2117271B1--01-153	INLETS CURB TYPE P-6 >10	5	each	$ 650.00	$ 3,250.00	5	each	$ 1,750.00	$ 8,750.00	-63%
PNC2117271B1--01-154	INLETS CURB TYPE P-6 PARTIAL	5	each	$ 650.00	$ 3,250.00	5	each	$ 1,000.00	$ 5,000.00	-35%
PNC2117271B1--01-155	INLETS CURB TYPE 7 <10	5	each	$ 650.00	$ 3,250.00	5	each	$ 1,000.00	$ 5,000.00	-35%
PNC2117271B1--01-156	INLETS CURB TYPE 7 PARTIAL	5	each	$ 500.00	$ 2,500.00	5	each	$ 500.00	$ 2,500.00	0%
PNC2117271B1--01-157	INLETS CURB TYPE 8 <10	5	each	$ 650.00	$ 3,250.00	5	each	$ 1,000.00	$ 5,000.00	-35%
PNC2117271B1--01-158	INLETS CURB TYPE 8 PARTIAL	5	each	$ 500.00	$ 2,500.00	5	each	$ 500.00	$ 2,500.00	0%
PNC2117271B1--01-159	INLETS DITCH BOTTOM TYPE A <10	5	each	$ 650.00	$ 3,250.00	5	each	$ 1,000.00	$ 5,000.00	-35%
PNC2117271B1--01-160	INLETS DITCH BOTTOM TYPE B <10	5	each	$ 650.00	$ 3,250.00	5	each	$ 1,500.00	$ 7,500.00	-57%
PNC2117271B1--01-161	INLETS DITCH BOTTOM TYPE B >10	5	each	$ 650.00	$ 3,250.00	5	each	$ 1,500.00	$ 7,500.00	-57%
PNC2117271B1--01-162	INLETS DITCH BOTTOM TYPE B J BOT <10	5	each	$ 650.00	$ 3,250.00	5	each	$ 1,000.00	$ 5,000.00	-35%
PNC2117271B1--01-163	INLETS DITCH BOTTOM TYPE B PARTIAL	5	each	$ 500.00	$ 2,500.00	5	each	$ 500.00	$ 2,500.00	0%
PNC2117271B1--01-164	INLETS DITCH BOTTOM TYPE C <10	5	each	$ 650.00	$ 3,250.00	5	each	$ 1,500.00	$ 7,500.00	-57%
PNC2117271B1--01-165	INLETS DITCH BOTTOM TYPE C >10	5	each	$ 650.00	$ 3,250.00	5	each	$ 1,000.00	$ 5,000.00	-35%
PNC2117271B1--01-166	INLETS DITCH BOTTOM TYPE C PARTIAL	5	each	$ 500.00	$ 2,500.00	5	each	$ 500.00	$ 2,500.00	0%
PNC2117271B1--01-167	INLETS DITCH BOTTOM TYPE C MODIFIED- BACK OF SIDEWALK <10	5	each	$ 650.00	$ 3,250.00	5	each	$ 1,000.00	$ 5,000.00	-35%
PNC2117271B1--01-168	INLETS DITCH BOTTOM TYPE D <10	5	each	$ 650.00	$ 3,250.00	5	each	$ 1,000.00	$ 5,000.00	-35%
PNC2117271B1--01-169	INLETS DITCH BOTTOM TYPE E <10	5	each	$ 650.00	$ 3,250.00	5	each	$ 1,000.00	$ 5,000.00	-35%
PNC2117271B1--01-170	INLETS DITCH BOTTOM TYPE H <10	5	each	$ 650.00	$ 3,250.00	5	each	$ 1,000.00	$ 5,000.00	-35%
PNC2117271B1--01-171	INLETS GUTTER TYPE S <10	5	each	$ 650.00	$ 3,250.00	5	each	$ 1,000.00	$ 5,000.00	-35%
PNC2117271B1--01-172	INLETS GUTTER TYPE S J BOTTOM <10	5	each	$ 650.00	$ 3,250.00	5	each	$ 1,000.00	$ 5,000.00	-35%
PNC2117271B1--01-173	INLETS GUTTER TYPE S PARTIAL	5	each	$ 650.00	$ 3,250.00	5	each	$ 750.00	$ 3,750.00	-13%
PNC2117271B1--01-174	INLETS GUTTER TYPE V <10	5	each	$ 650.00	$ 3,250.00	5	each	$ 1,000.00	$ 5,000.00	-35%
PNC2117271B1--01-175	INLETS GUTTER TYPE V PARTIAL	5	each	$ 650.00	$ 3,250.00	5	each	$ 750.00	$ 3,750.00	-13%
PNC2117271B1--01-176	INLETS MEDIAN BARRIER TYPE 2 J BOTTOM <10	5	each	$ 650.00	$ 3,250.00	5	each	$ 1,000.00	$ 5,000.00	-35%
PNC2117271B1--01-177	INLETS MEDIAN BARRIER TYPE 3 J BOTTOM <10	5	each	$ 650.00	$ 3,250.00	5	each	$ 1,000.00	$ 5,000.00	-35%
PNC2117271B1--01-178	INLETS SPECIAL <10	5	each	$ 500.00	$ 2,500.00	5	each	$ 500.00	$ 2,500.00	0%
PNC2117271B1--01-179	INLETS CLOSED FLUME	5	each	$ 650.00	$ 3,250.00	5	each	$ 4,000.00	$ 20,000.00	-84%
PNC2117271B1--01-180	MANHOLES P-7 <10	5	each	$ 650.00	$ 3,250.00	5	each	$ 2,000.00	$ 10,000.00	-68%
PNC2117271B1--01-181	MANHOLES P-7 PARTIAL	5	each	$ 100.00	$ 500.00	5	each	$ 100.00	$ 500.00	0%
PNC2117271B1--01-182	MANHOLES P-8 <10	5	each	$ 650.00	$ 3,250.00	5	each	$ 1,000.00	$ 5,000.00	-35%
PNC2117271B1--01-183	MANHOLES P-8 PARTIAL	5	each	$ 500.00	$ 2,500.00	5	each	$ 500.00	$ 2,500.00	0%
PNC2117271B1--01-184	MANHOLES J-7 <10	5	each	$ 650.00	$ 3,250.00	5	each	$ 2,000.00	$ 10,000.00	-68%

PNC2117271B1--01-185	MANHOLES J-7 PARTIAL	5	each	$ 500.00	$ 2,500.00	5	each	$ 500.00	$ 2,500.00	0%
PNC2117271B1--01-186	MANHOLES, SPECIAL, <10'	Line Item Not Included in Solicitation				5	each	$ 500.00	$ 2,500.00	
PNC2117271B1--01-187	MANHOLES, SPECIAL, >10'	Line Item Not Included in Solicitation				5	each	$ 500.00	$ 2,500.00	
PNC2117271B1--01-188	MANHOLES, SPECIAL, PARTIAL	Line Item Not Included in Solicitation				5	each	$ 200.00	$ 1,000.00	
PNC2117271B1--01-189	MANHOLES REPAIR	5	each	$ 650.00	$ 3,250.00	5	each	$ 750.00	$ 3,750.00	-13%
PNC2117271B1--01-190	JUNCTION BOX DRAINAGE P-7 <10	5	each	$ 650.00	$ 3,250.00	5	each	$ 1,000.00	$ 5,000.00	-35%
PNC2117271B1--01-191	JUNCTION BOX DRAINAGE P-7 PARTIAL	5	each	$ 500.00	$ 2,500.00	5	each	$ 500.00	$ 2,500.00	0%
PNC2117271B1--01-192	JUNCTION BOXES J-7 <10	5	each	$ 650.00	$ 3,250.00	5	each	$ 1,000.00	$ 5,000.00	-35%
PNC2117271B1--01-193	JUNCTION BOXES DRAINAGE J-7 PARTIAL	5	each	$ 500.00	$ 2,500.00	5	each	$ 500.00	$ 2,500.00	0%
PNC2117271B1--01-194	JUNCTION BOX DRAINAGE, SPECIAL <10'	Line Item Not Included in Solicitation				5	each	$ 500.00	$ 2,500.00	-100%
PNC2117271B1--01-195	JUNCTION BOX DRAINAGE, SPECIAL >10'	Line Item Not Included in Solicitation				5	each	$ 500.00	$ 2,500.00	-100%
PNC2117271B1--01-196	INLETS ADJUST	5	each	$ 2,500.00	$ 12,500.00	5	each	$ 2,000.00	$ 10,000.00	25%
PNC2117271B1--01-197	MANHOLE ADJUST	10	each	$ 2,600.00	$ 26,000.00	10	each	$ 2,100.00	$ 21,000.00	24%
PNC2117271B1--01-198	MANHOLE ADJUST UTILITIES	5	each	$ 2,000.00	$ 10,000.00	5	each	$ 2,000.00	$ 10,000.00	0%
PNC2117271B1--01-199	VALVE BOXES ADJUST	50	each	$ 800.00	$ 40,000.00	20	each	$ 1,000.00	$ 20,000.00	-20%
PNC2117271B1--01-200	DRAINAGE STRUCTURES MISCELLANEOUS ADJUST	5	each	$ 1,700.00	$ 8,500.00	5	each	$ 750.00	$ 3,750.00	127%
PNC2117271B1--01-201	YARD DRAIN	5	each	$ 200.00	$ 1,000.00	5	each	$ 200.00	$ 1,000.00	0%
PNC2117271B1--01-202	DRAINAGE STRUCTURE MODIFY	50	each	$ 1,500.00	$ 75,000.00	10	each	$ 1,500.00	$ 15,000.00	0%
PNC2117271B1--01-203	INLETS RELOCATING	5	each	$ 200.00	$ 1,000.00	5	each	$ 200.00	$ 1,000.00	0%
PNC2117271B1--01-204	MANHOLES AND INLETS CLEANING AND SEALING <10	50	each	$ 1,600.00	$ 80,000.00	20	each	$ 1,600.00	$ 32,000.00	0%
PNC2117271B1--01-205	MANHOLES AND INLETS CLEANING AND SEALING >10	5	each	$ 1,900.00	$ 9,500.00	5	each	$ 1,500.00	$ 7,500.00	27%
PNC2117271B1--01-206	REPLACE GRATE	10	each	$ 1,500.00	$ 15,000.00	5	each	$ 2,500.00	$ 12,500.00	-40%
PNC2117271B1--01-207	REPLACEMENT OF AIRCRAFT RATED CATCH BASIN TOP	5	each	$ 4,000.00	$ 20,000.00	5	each	$ 7,500.00	$ 37,500.00	-47%
PNC2117271B1--01-208	PIPE CULVERT OPTIONAL MATERIAL ROUND 12 15 18 24 GUTTER DRAIN	50	linear foot	$ 20.00	$ 1,000.00	100	linear foot	$ 20.00	$ 2,000.00	0%
PNC2117271B1--01-209	PIPE CULVERT RCP MATERIAL ONLY ROUND 12 15 18 24 GUTTER DRAIN	50	linear foot	$ 30.00	$ 1,500.00	100	linear foot	$ 30.00	$ 3,000.00	0%
PNC2117271B1--01-210	PIPE CULVERT OPTIONAL MATERIAL ROUND 3036 GUTTER DRAIN	50	linear foot	$ 45.00	$ 2,250.00	100	linear foot	$ 45.00	$ 4,500.00	0%
PNC2117271B1--01-211	PIPE CULVERT RCP MATERIAL ONLY ROUND 3036 GUTTER DRAIN	50	linear foot	$ 50.00	$ 2,500.00	100	linear foot	$ 50.00	$ 5,000.00	0%
PNC2117271B1--01-212	PIPE CULVERT OPTIONAL MATERIAL ROUND 4248 GUTTER DRAIN	50	linear foot	$ 75.00	$ 3,750.00	100	linear foot	$ 75.00	$ 7,500.00	0%
PNC2117271B1--01-213	PIPE CULVERT RCP MATERIAL ONLY ROUND 4248 GUTTER DRAIN	50	linear foot	$ 80.00	$ 4,000.00	100	linear foot	$ 80.00	$ 8,000.00	0%
PNC2117271B1--01-214	PIPE CULVERT OPTIONAL MATERIAL ROUND 12 15 18 24 SD	50	linear foot	$ 135.00	$ 6,750.00	200	linear foot	$ 100.00	$ 20,000.00	35%
PNC2117271B1--01-215	PIPE CULVERT RCP MATERIAL ONLY ROUND 12 15 18 24 SD	2000	linear foot	$ 170.00	$ 340,000.00	200	linear foot	$ 160.00	$ 32,000.00	6%
PNC2117271B1--01-216	PIPE CULVERT OPTIONAL MATERIAL ROUND 3036 SD	200	linear foot	$ 120.00	$ 24,000.00	100	linear foot	$ 120.00	$ 12,000.00	0%
PNC2117271B1--01-217	PIPE CULVERT RCP MATERIAL ONLY ROUND 3036 SD	20	linear foot	$ 200.00	$ 4,000.00	100	linear foot	$ 165.00	$ 16,500.00	21%
PNC2117271B1--01-218	PIPE CULVERT OPTIONAL MATERIAL ROUND 4248 SD	10	linear foot	$ 145.00	$ 1,450.00	100	linear foot	$ 145.00	$ 14,500.00	0%
PNC2117271B1--01-219	PIPE CULVERT RCP MATERIAL ONLY ROUND 4248 SD	20	linear foot	$ 235.00	$ 4,700.00	100	linear foot	$ 220.00	$ 22,000.00	7%
PNC2117271B1--01-220	PIPE CULVERT OPTIONAL MATERIAL ROUND 5460 SD	20	linear foot	$ 160.00	$ 3,200.00	100	linear foot	$ 160.00	$ 16,000.00	0%
PNC2117271B1--01-221	PIPE CULVERT RCP MATERIAL ONLY ROUND 5460 SD	20	linear foot	$ 245.00	$ 4,900.00	100	linear foot	$ 225.00	$ 22,500.00	9%
PNC2117271B1--01-222	PIPE CULVERT OPTIONAL MATERIAL OTHER SHAPE - ELLIP/ARCH 15 18 SD	20	linear foot	$ 10.00	$ 200.00	100	linear foot	$ 10.00	$ 1,000.00	0%
PNC2117271B1--01-223	PIPE CULVERT RCP MATERIAL ONLY OTHER SHAPE - ELLIP/ARCH 15 18 SD	100	linear foot	$ 100.00	$ 10,000.00	100	linear foot	$ 65.00	$ 6,500.00	54%
PNC2117271B1--01-224	PIPE CULVERT OPTIONAL MATERIAL OTHER SHAPE - ELLIP/ARCH 24 SD	100	linear foot	$ 20.00	$ 2,000.00	100	linear foot	$ 20.00	$ 2,000.00	0%
PNC2117271B1--01-225	PIPE CULVERT RCP MATERIAL ONLY OTHER SHAPE - ELLIP/ARCH 24 SD	50	linear foot	$ 115.00	$ 5,750.00	100	linear foot	$ 70.00	$ 7,000.00	64%
PNC2117271B1--01-226	PIPE CULVERT OPTIONAL MATERIAL OTHER SHAPE - ELLIP/ARCH 30 36 SD	50	linear foot	$ 40.00	$ 2,000.00	100	linear foot	$ 40.00	$ 4,000.00	0%
PNC2117271B1--01-227	PIPE CULVERT RCP MATERIAL ONLY OTHER SHAPE - ELLIP/ARCH 30 36 SD	50	linear foot	$ 75.00	$ 3,750.00	100	linear foot	$ 75.00	$ 7,500.00	0%
PNC2117271B1--01-228	PIPE CULVERT OPTIONAL MATERIAL ROUND 15 18 24 S/CD	50	linear foot	$ 100.00	$ 5,000.00	100	linear foot	$ 100.00	$ 10,000.00	0%
PNC2117271B1--01-229	PIPE CULVERT RCP CLASS IV ONLY 15 18 24 S/CD	20	linear foot	$ 180.00	$ 3,600.00	100	linear foot	$ 180.00	$ 18,000.00	0%
PNC2117271B1--01-230	PIPE CULVERT OPT MATERIAL ROUND 30S/CD	20	linear foot	$ 85.00	$ 1,700.00	100	linear foot	$ 85.00	$ 8,500.00	0%
PNC2117271B1--01-231	PIPE CULVERT RCP CLASS IV ONLY 30S/CD	20	linear foot	$ 175.00	$ 3,500.00	100	linear foot	$ 175.00	$ 17,500.00	0%
PNC2117271B1--01-232	PIPE CULVERT OPT MATERIAL ROUND 36S/CD	20	linear foot	$ 175.00	$ 3,500.00	100	linear foot	$ 175.00	$ 17,500.00	0%
PNC2117271B1--01-233	PIPE CULVERT RCP CLASS IV ONLY 36S/CD	20	linear foot	$ 160.00	$ 3,200.00	100	linear foot	$ 160.00	$ 16,000.00	0%
PNC2117271B1--01-234	CLEANING & SEALING EXISTING PIPE JOINT 15 18 24 STORM SEWER	10	each	$ 2,200.00	$ 22,000.00	5	each	$ 2,200.00	$ 11,000.00	0%
PNC2117271B1--01-235	CLEANING & SEALING EXISTING PIPE JOINT 30 36 STORM SEWER	2	each	$ 2,250.00	$ 4,500.00	5	each	$ 2,300.00	$ 11,500.00	-2%
PNC2117271B1--01-236	CLEANING & SEALING EXISTING PIPE JOINT 42 48 STORM SEWER	2	each	$ 2,265.00	$ 4,530.00	5	each	$ 2,300.00	$ 11,500.00	-2%
PNC2117271B1--01-237	CLEANING & SEALING EXISTING PIPE JOINT 54 60 STORM SEWER	2	each	$ 2,280.00	$ 4,560.00	5	each	$ 2,300.00	$ 11,500.00	-1%
PNC2117271B1--01-238	CLEANING & SEALING EXISTING PIPE JOINT >60 STORM SEWER	2	each	$ 2,295.00	$ 4,590.00	5	each	$ 2,300.00	$ 11,500.00	0%
PNC2117271B1--01-239	CLEANING & SEALING EXISTING PIPE JOINT 15 18 24 CROSS DRAIN	2	each	$ 1,500.00	$ 3,000.00	5	each	$ 2,300.00	$ 11,500.00	-35%
PNC2117271B1--01-240	CLEANING & SEALING EXISTING PIPE JOINT 30 36 CROSS DRAIN	2	each	$ 1,550.00	$ 3,100.00	5	each	$ 2,300.00	$ 11,500.00	-33%
PNC2117271B1--01-241	CLEANING & SEALING EXISTING PIPE JOINT 42 48 CROSS DRAIN	2	each	$ 1,575.00	$ 3,150.00	10	each	$ 2,300.00	$ 23,000.00	-32%
PNC2117271B1--01-242	CLEANING & SEALING EXISTING PIPE JOINT 5460 CROSS DRAIN	2	each	$ 1,600.00	$ 3,200.00	10	each	$ 2,300.00	$ 23,000.00	-30%
PNC2117271B1--01-243	CLEANING & SEALING EXISTING PIPE JOINT >60 CROSS DRAIN	2	each	$ 1,625.00	$ 3,250.00	10	each	$ 2,300.00	$ 23,000.00	-29%
PNC2117271B1--01-244	PIPE FILLING AND PLUGGING- PLACE OUT OF SERVICE	30	cubic yard	$ 500.00	$ 15,000.00	10	cubic yard	$ 500.00	$ 5,000.00	0%
PNC2117271B1--01-245	STORM SEWER TRENCH, 2' WIDE	Line Item Not Included in Solicitation				20	linear foot	$ 100.00	$ 2,000.00	
PNC2117271B1--01-246	STORM SEWER TRENCH, 3' WIDE	Line Item Not Included in Solicitation				20	linear foot	$ 110.00	$ 2,200.00	
PNC2117271B1--01-247	STORM SEWER TRENCH, 4' WIDE	Line Item Not Included in Solicitation				20	linear foot	$ 140.00	$ 2,800.00	
PNC2117271B1--01-248	STORM SEWER TRENCH, 5' WIDE	Line Item Not Included in Solicitation				20	linear foot	$ 180.00	$ 3,600.00	
PNC2117271B1--01-249	STORM SEWER TRENCH, 6' WIDE	Line Item Not Included in Solicitation				20	linear foot	$ 220.00	$ 4,400.00	
PNC2117271B1--01-250	DESILTING CONCRETE BOX CULVERT	5	cubic yard	$ 500.00	$ 2,500.00	10	cubic yard	$ 500.00	$ 5,000.00	0%
PNC2117271B1--01-251	PVC PIPE FOR BACK OF SIDEWALK 4	100	linear foot	$ 5.00	$ 500.00	50	linear foot	$ 5.00	$ 250.00	0%
PNC2117271B1--01-252	PVC PIPE FOR BACK OF SIDEWALK NON-STANDARD DIAMETER	100	linear foot	$ 5.00	$ 500.00	50	linear foot	$ 5.00	$ 250.00	0%
PNC2117271B1--01-253	MITERED END SECTION OPTIONAL ROUND 12 1518 CD	5	each	$ 360.00	$ 1,800.00	4	each	$ 400.00	$ 1,600.00	-10%
PNC2117271B1--01-254	MITERED END SECTION OPTIONAL ROUND 24 CD	5	each	$ 375.00	$ 1,875.00	4	each	$ 400.00	$ 1,600.00	-6%
PNC2117271B1--01-255	MITERED END SECTION OPTIONAL ROUND 3036 CD	5	each	$ 400.00	$ 2,000.00	4	each	$ 400.00	$ 1,600.00	0%
PNC2117271B1--01-256	MITERED END SECTION OPTIONAL ROUND 42 48 CD	5	each	$ 500.00	$ 2,500.00	4	each	$ 800.00	$ 3,200.00	-38%
PNC2117271B1--01-257	PIPE LINER OPTIONAL MATERIAL 0-24	1500	linear foot	$ 225.00	$ 337,500.00	100	linear foot	$ 200.00	$ 20,000.00	13%
PNC2117271B1--01-258	PIPE LINER OPTIONAL MATERIAL 25-36	500	linear foot	$ 300.00	$ 150,000.00	100	linear foot	$ 215.00	$ 21,500.00	40%
PNC2117271B1--01-259	PIPE LINER OPTIONAL MATERIAL 37-48	20	linear foot	$ 700.00	$ 14,000.00	100	linear foot	$ 240.00	$ 24,000.00	192%
PNC2117271B1--01-260	STORM SEWER INSPECTION (VIDEO CAMERA)	100	linear foot	$ 20.00	$ 2,000.00	50	linear foot	$ 10.00	$ 500.00	100%
PNC2117271B1--01-261	TRENCH DRAIN STANDARD	100	linear foot	$ 25.00	$ 2,500.00	100	linear foot	$ 25.00	$ 2,500.00	0%
PNC2117271B1--01-262	TRENCH DRAIN CLEANING	100	linear foot	$ 100.00	$ 10,000.00	100	linear foot	$ 35.00	$ 3,500.00	186%
PNC2117271B1--01-263	UNDERDRAIN TYPE II	100	linear foot	$ 15.00	$ 1,500.00	100	linear foot	$ 15.00	$ 1,500.00	0%
PNC2117271B1--01-264	FRENCH DRAIN 18	200	linear foot	$ 265.00	$ 53,000.00	100	linear foot	$ 250.00	$ 25,000.00	6%
PNC2117271B1--01-265	FRENCH DRAIN 24	50	linear foot	$ 275.00	$ 13,750.00	100	linear foot	$ 280.00	$ 28,000.00	-2%
PNC2117271B1--01-266	FRENCH DRAIN 30	50	linear foot	$ 275.00	$ 13,750.00	100	linear foot	$ 300.00	$ 30,000.00	-8%
PNC2117271B1--01-267	FRENCH DRAIN 36	2000	linear foot	$ 140.00	$ 280,000.00	100	linear foot	$ 350.00	$ 35,000.00	-60%
PNC2117271B1--01-268	BALLAST ROCK FRENCH DRAIN AGGREGATE	20	cubic yard	$ 75.00	$ 1,500.00	100	cubic yard	$ 75.00	$ 7,500.00	0%
PNC2117271B1--01-269	SHEET PILING STEEL TEMPORARY-CRITICAL	100	square foot	$ 25.00	$ 2,500.00	1100	square foot	$ 35.00	$ 38,500.00	-29%
PNC2117271B1--01-270	STORM DRAINAGE DESILTING VIDEO & FINISHED CD OR DVD 0-24 PIPE	7000	linear foot	$ 15.00	$ 105,000.00	1000	linear foot	$ 12.00	$ 12,000.00	25%
PNC2117271B1--01-271	STORM DRAINAGE DESILTING VIDEO & FINISHED CD OR DVD 25-36 PIPE	1000	linear foot	$ 26.00	$ 26,000.00	1000	linear foot	$ 16.00	$ 16,000.00	63%
PNC2117271B1--01-272	STORM DRAINAGE DESILTING VIDEO & FINISHED CD OR DVD 37-48 PIPE	100	linear foot	$ 40.00	$ 4,000.00	1000	linear foot	$ 18.00	$ 18,000.00	122%
PNC2117271B1--01-273	STORM DRAINAGE DESILTING VIDEO & FINISHED CD OR DVD 49-60 PIPE	100	linear foot	$ 50.00	$ 5,000.00	1000	linear foot	$ 18.00	$ 18,000.00	178%
PNC2117271B1--01-274	STORM DRAINAGE DESILTING VIDEO & FINISHED CD OR DVD 61 OR GRATER PIPE	100	linear foot	$ 75.00	$ 7,500.00	1000	linear foot	$ 18.00	$ 18,000.00	317%
PNC2117271B1--01-275	VIDEO STORM DRAINAGE & FINISH CD 4 HR MINIMUM CHARGE	10	hour	$ 310.00	$ 3,100.00	100	hour	$ 265.00	$ 26,500.00	17%
PNC2117271B1--01-276	WELL POINT SYSTEM COMPLETE 4 PUMP	5	day	$ 300.00	$ 1,500.00	30	day	$ 300.00	$ 9,000.00	0%
PNC2117271B1--01-277	WELL POINT SYSTEM COMPLETE 6 PUMP	5	day	$ 300.00	$ 1,500.00	30	day	$ 400.00	$ 12,000.00	-25%
PNC2117271B1--01-278	WELL POINT SYSTEM COMPLETE 8 PUMP	100	day	$ 800.00	$ 80,000.00	40	day	$ 1,900.00	$ 76,000.00	-58%
PNC2117271B1--01-279	LASER PROFILE STORM DRAINAGE WITH DVD VIDEO & REPORT	100	linear foot	$ 5.00	$ 500.00	10	linear foot	$ 25.00	$ 250.00	-80%
PNC2117271B1--01-280	PIPE/CULVERT DIVING INSPECTION 3-PERSON CREW 4 HR MINIMUM CHARGE	10	hour	$ 900.00	$ 9,000.00	40	hour	$ 750.00	$ 30,000.00	20%
PNC2117271B1--01-281	BY-PASS PUMP 4	30	day	$ 700.00	$ 21,000.00	10	day	$ 700.00	$ 7,000.00	0%
PNC2117271B1--01-282	BY-PASS PUMP 6	20	day	$ 710.00	$ 14,200.00	10	day	$ 800.00	$ 8,000.00	-11%

PNC2117271B1--01-283	BY-PASS PUMP 8	5	day	$ 720.00	$ 3,600.00	10	day	$ 900.00	$ 9,000.00	-20%
PNC2117271B1--01-284	12 PLUG FOR BLOCKING DRAINAGE LINE WITHIN WATERTABLE - INCLUDES INSTALLATION OP	5	each	$ 200.00	$ 1,000.00	2	each	$ 400.00	$ 800.00	-50%
PNC2117271B1--01-285	15 PLUG FOR BLOCKING DRAINAGE LINE WITHIN WATERTABLE - INCLUDES INSTALLATION OP	5	each	$ 250.00	$ 1,250.00	2	each	$ 425.00	$ 850.00	-41%
PNC2117271B1--01-286	18 PLUG FOR BLOCKING DRAINAGE LINE WITHIN WATERTABLE - INCLUDES INSTALLATION OP	5	each	$ 300.00	$ 1,500.00	2	each	$ 550.00	$ 1,100.00	-45%
PNC2117271B1--01-287	24 PLUG FOR BLOCKING DRAINAGE LINE WITHIN WATERTABLE - INCLUDES INSTALLATION OP	5	each	$ 350.00	$ 1,750.00	2	each	$ 550.00	$ 1,100.00	-36%
PNC2117271B1--01-288	30 PLUG FOR BLOCKING DRAINAGE LINE WITHIN WATERTABLE - INCLUDES INSTALLATION OP	5	each	$ 570.00	$ 2,850.00	2	each	$ 700.00	$ 1,400.00	-19%
PNC2117271B1--01-289	36 PLUG FOR BLOCKING DRAINAGE LINE WITHIN WATERTABLE - INCLUDES INSTALLATION OP	5	each	$ 580.00	$ 2,900.00	2	each	$ 800.00	$ 1,600.00	-28%
PNC2117271B1--01-290	42 PLUG FOR BLOCKING DRAINAGE LINE WITHIN WATERTABLE - INCLUDES INSTALLATION OP	5	each	$ 600.00	$ 3,000.00	2	each	$ 900.00	$ 1,800.00	-33%
PNC2117271B1--01-291	48 PLUG FOR BLOCKING DRAINAGE LINE WITHIN WATERTABLE - INCLUDES INSTALLATION OP	5	each	$ 700.00	$ 3,500.00	2	each	$ 1,500.00	$ 3,000.00	-53%
PNC2117271B1--01-292	54 PLUG FOR BLOCKING DRAINAGE LINE WITHIN WATERTABLE - INCLUDES INSTALLATION OP	5	each	$ 800.00	$ 4,000.00	2	each	$ 2,500.00	$ 5,000.00	-68%
PNC2117271B1--01-293	60 PLUG FOR BLOCKING DRAINAGE LINE WITHIN WATERTABLE - INCLUDES INSTALLATION OP	5	each	$ 900.00	$ 4,500.00	2	each	$ 2,600.00	$ 5,200.00	-65%
PNC2117271B1--01-294	66 PLUG FOR BLOCKING DRAINAGE LINE WITHIN WATERTABLE - INCLUDES INSTALLATION OP	5	each	$ 1,050.00	$ 5,250.00	2	each	$ 3,000.00	$ 6,000.00	-65%
PNC2117271B1--01-295	72 PLUG FOR BLOCKING DRAINAGE LINE WITHIN WATERTABLE - INCLUDES INSTALLATION OP	5	each	$ 1,150.00	$ 5,750.00	2	each	$ 3,000.00	$ 6,000.00	-62%
PNC2117271B1--01-296	78 PLUG FOR BLOCKING DRAINAGE LINE WITHIN WATERTABLE - INCLUDES INSTALLATION OP	5	each	$ 1,250.00	$ 6,250.00	2	each	$ 3,000.00	$ 6,000.00	-58%
PNC2117271B1--01-297	84 PLUG FOR BLOCKING DRAINAGE LINE WITHIN WATERTABLE - INCLUDES INSTALLATION OP	5	each	$ 1,300.00	$ 6,500.00	2	each	$ 3,000.00	$ 6,000.00	-57%
PNC2117271B1--01-298	STEEL ROAD PLATE UP TO 30 DAYS F&I	1000	square foot	$ 30.00	$ 30,000.00	100	square foot	$ 20.00	$ 2,000.00	50%
PNC2117271B1--01-299	MINOR INLET-TOP REPAIR (NO REINFORCEMENT REPAIR)	5	each	$ 750.00	$ 3,750.00	10	each	$ 650.00	$ 6,500.00	15%
PNC2117271B1--01-300	MAJOR INLET-TOP REPAIR (REINFORCEMENT REPAIR)	5	each	$ 800.00	$ 4,000.00	10	each	$ 900.00	$ 9,000.00	-11%
PNC2117271B1--01-301	PLASTIC FILTER FABRIC SUBSURFACE	5000	square yard	$ 5.00	$ 25,000.00	500	square yard	$ 30.00	$ 15,000.00	-83%
PNC2117271B1--01-302	PIPE HANDRAIL- GUIDERAIL STEEL	10	linear foot	$ 65.00	$ 650.00	50	linear foot	$ 45.00	$ 2,250.00	44%
PNC2117271B1--01-303	PIPE HANDRAIL- GUIDERAIL ALUMINUM	50	linear foot	$ 85.00	$ 4,250.00	150	linear foot	$ 50.00	$ 7,500.00	70%
PNC2117271B1--01-304	PEDESTRIAN / BICYCLE RAILING STEEL 42 TYPE 1	10	linear foot	$ 125.00	$ 1,250.00	50	linear foot	$ 50.00	$ 2,500.00	150%
PNC2117271B1--01-305	PEDESTRIAN / BICYCLE RAILING STEEL ONLY 54 TYPE 1	10	linear foot	$ 125.00	$ 1,250.00	50	linear foot	$ 50.00	$ 2,500.00	150%
PNC2117271B1--01-306	PEDESTRIAN / BICYCLE RAILING ALUMINUM ONLY 42 TYPE 1	50	linear foot	$ 125.00	$ 6,250.00	50	linear foot	$ 50.00	$ 2,500.00	150%
PNC2117271B1--01-307	PEDESTRIAN / BICYCLE RAILING ALUMINUM ONLY 54 TYPE 1	50	linear foot	$ 125.00	$ 6,250.00	50	linear foot	$ 50.00	$ 2,500.00	150%
PNC2117271B1--01-308	ALUMINUM BULLET RAILINGS SINGLE RAIL	50	linear foot	$ 60.00	$ 3,000.00	50	linear foot	$ 75.00	$ 3,750.00	-20%
PNC2117271B1--01-309	ALUMINUM BULLET RAILINGS DOUBLE RAIL	50	linear foot	$ 90.00	$ 4,500.00	50	linear foot	$ 80.00	$ 4,000.00	13%
PNC2117271B1--01-310	ALUMINUM BULLET RAILINGS TRIPLE RAIL	Line Item Not Included in Solicitation				50	linear foot	$ 85.00	$ 4,250.00	
PNC2117271B1--01-311	BULLET RAIL RELOCATE- DOUBLE RAIL	50	linear foot	$ 30.00	$ 1,500.00	New Line Item				
PNC2117271B1--01-312	CONCRETE CURB & GUTTER TYPE E	100	linear foot	$ 15.00	$ 1,500.00	100	linear foot	$ 15.00	$ 1,500.00	0%
PNC2117271B1--01-313	CONCRETE CURB & GUTTER TYPE F	5000	linear foot	$ 45.00	$ 225,000.00	3000	linear foot	$ 40.00	$ 120,000.00	13%
PNC2117271B1--01-314	CONCRETE CURB TYPE D	1000	linear foot	$ 30.00	$ 30,000.00	500	linear foot	$ 30.00	$ 15,000.00	0%
PNC2117271B1--01-315	VALLEY GUTTER- CONCRETE	4000	linear foot	$ 35.00	$ 140,000.00	500	linear foot	$ 30.00	$ 15,000.00	17%
PNC2117271B1--01-316	TRAFFIC SEPARATOR CONCRETE - TYPE IV 4 WIDE	20	linear foot	$ 140.00	$ 2,800.00	100	linear foot	$ 25.00	$ 2,500.00	460%
PNC2117271B1--01-317	SHOULDER GUTTER- CONCRETE	100	linear foot	$ 10.00	$ 1,000.00	100	linear foot	$ 10.00	$ 1,000.00	0%
PNC2117271B1--01-318	CONCRETE TRAFFIC SEPARATOR SPECIAL-VARIABLE WIDTH	200	square yard	$ 15.00	$ 3,000.00	100	square yard	$ 10.00	$ 1,000.00	50%
PNC2117271B1--01-319	MEDIAN CONCRETE BARRIER WALL	500	linear foot	$ 75.00	$ 37,500.00	100	linear foot	$ 270.00	$ 27,000.00	-72%
PNC2117271B1--01-320	MEDIAN BARRIER WALL CONCRETE PRECAST	20	linear foot	$ 175.00	$ 3,500.00	100	linear foot	$ 200.00	$ 20,000.00	-13%
PNC2117271B1--01-321	CONCRETE SIDEWALK AND DRIVEWAYS 6 THICK	15000	square yard	$ 95.00	$ 1,425,000.00	5000	square yard	$ 80.00	$ 400,000.00	19%
PNC2117271B1--01-322	CONCRETE SIDEWALK 8 THICK	100	square yard	$ 100.00	$ 10,000.00	100	square yard	$ 81.00	$ 8,100.00	23%
PNC2117271B1--01-323	CONCRETE SIDEWALK 10 THICK	150	square yard	$ 140.00	$ 21,000.00	700	square yard	$ 82.00	$ 57,400.00	71%
PNC2117271B1--01-324	PERVIOUS CONCRETE PAVEMENT - SIDEWALK 6 THICK	50	square yard	$ 55.00	$ 2,750.00	100	square yard	$ 85.00	$ 8,500.00	-35%
PNC2117271B1--01-325	PERVIOUS CONCRETE PAVEMENT - TRAFFIC RATED 8 THICK	50	square yard	$ 50.00	$ 2,500.00	4000	square yard	$ 80.00	$ 320,000.00	-38%
PNC2117271B1--01-326	PATTERNED PAVEMENT VEHICULAR AREAS FDOT APL 523-000-009 TRAFFIC PATTERNS ONLY	200	square yard	$ 135.00	$ 27,000.00	50	square yard	$ 150.00	$ 7,500.00	-10%
PNC2117271B1--01-327	PATTERNED PAVEMENT NON-VEHICULAR AREAS	50	square yard	$ 40.00	$ 2,000.00	50	square yard	$ 50.00	$ 2,500.00	-20%
PNC2117271B1--01-328	CONCRETE DITCH PAVEMENT NON REINFORCED 6	50	square yard	$ 50.00	$ 2,500.00	50	square yard	$ 80.00	$ 4,000.00	-38%
PNC2117271B1--01-329	CONCRETE SLOPE PAVEMENT 6 REINFORCED	50	square yard	$ 80.00	$ 4,000.00	50	square yard	$ 90.00	$ 4,500.00	-11%
PNC2117271B1--01-330	PAVERS ARCHITECTURAL ROADWAY	50	square yard	$ 25.00	$ 1,250.00	100	square yard	$ 15.00	$ 1,500.00	67%
PNC2117271B1--01-331	PAVERS ARCHITECTURAL SIDEWALK	20	square yard	$ 95.00	$ 1,900.00	100	square yard	$ 15.00	$ 1,500.00	533%
PNC2117271B1--01-332	DETECTABLE WARNING ON EXISTING WALKING SURFACE RETROFIT	50	square foot	$ 35.00	$ 1,750.00	150	square foot	$ 60.00	$ 9,000.00	-42%
PNC2117271B1--01-333	DETECTABLE WARNING ON EXISTING WALKING SURFACE RETROFIT FDOT APL 527-000-015 O	50	square foot	$ 35.00	$ 1,750.00	250	square foot	$ 65.00	$ 16,250.00	-46%
PNC2117271B1--01-334	DETECTABLE WARNING ON EXISTING WALKING SURFACE CAST-IN-PLACE	100	square foot	$ 250.00	$ 25,000.00	250	square foot	$ 75.00	$ 18,750.00	233%
PNC2117271B1--01-335	ADA COMPLIANT CURB RAMP SINGLE DIRECTION	150	each	$ 3,100.00	$ 465,000.00	100	each	$ 2,050.00	$ 205,000.00	51%
PNC2117271B1--01-336	ADA COMPLIANT CURB RAMP TWO-DIRECTION	30	each	$ 3,200.00	$ 96,000.00	10	each	$ 2,150.00	$ 21,500.00	49%
PNC2117271B1--01-337	6 PVC BOLLARD WITH REFLECTIVE TAPE	5	each	$ 900.00	$ 4,500.00	10	each	$ 400.00	$ 4,000.00	125%
PNC2117271B1--01-338	6 REMOVABLE AND LOCKABLE BOLLARD RPL6 BY TRAFFIC GUARD OR APPROVED EQUAL	5	each	$ 1,500.00	$ 7,500.00	10	each	$ 75.00	$ 750.00	1900%
PNC2117271B1--01-339	RIPRAP SAND-CEMENT	10	cubic yard	$ 500.00	$ 5,000.00	100	cubic yard	$ 100.00	$ 10,000.00	400%
PNC2117271B1--01-340	RIPRAP- RUBBLE BANK AND SHORE	10	ton	$ 500.00	$ 5,000.00	50	ton	$ 85.00	$ 4,250.00	488%
PNC2117271B1--01-341	RIPRAP RUBBLE DITCH LINING	10	ton	$ 500.00	$ 5,000.00	1000	ton	$ 60.00	$ 60,000.00	733%
PNC2117271B1--01-342	BEDDING STONE	1000	ton	$ 20.00	$ 20,000.00	600	ton	$ 40.00	$ 24,000.00	-50%
PNC2117271B1--01-343	SOUND/NOISE BARRIER-INC FOUNDATION PERMANENT	100	square foot	$ 30.00	$ 3,000.00	100	square foot	$ 30.00	$ 3,000.00	0%
PNC2117271B1--01-344	PERIMETER WALL	100	square foot	$ 35.00	$ 3,500.00	20000	square foot	$ 22.00	$ 440,000.00	59%
PNC2117271B1--01-345	GUARDRAIL ROADWAY	Line Item Not Included in Solicitation				500	linear foot	$ 30.00	$ 15,000.00	-100%
PNC2117271B1--01-346	GUARDRAIL ROADWAY , COATED WEATHERING STEEL GUARDRAIL F&I	Line Item Not Included in Solicitation				100	linear foot	$ 31.00	$ 3,100.00	-100%
PNC2117271B1--01-347	GUARDRAIL ROADWAY GENERAL TL-2	2500	linear foot	$ 15.00	$ 37,500.00	500	linear foot	$ 10.00	$ 5,000.00	50%
PNC2117271B1--01-348	GUARDRAIL ROADWAY GENERAL TL-3	2500	linear foot	$ 25.00	$ 62,500.00	500	linear foot	$ 15.00	$ 7,500.00	67%
PNC2117271B1--01-349	GUARDRAIL-SHOP BENT PANELS	50	linear foot	$ 12.00	$ 600.00	500	linear foot	$ 12.00	$ 6,000.00	0%
PNC2117271B1--01-350	GUARDRAIL-BRIDGE	Line Item Not Included in Solicitation				100	linear foot	$ 16.00	$ 1,600.00	-100%
PNC2117271B1--01-351	GUARDRAIL-RUB RAIL SINGLE SIDED	50	linear foot	$ 10.00	$ 500.00	500	linear foot	$ 10.00	$ 5,000.00	0%
PNC2117271B1--01-352	GUARDRAIL-RUB RAIL DOUBLE SIDED	Line Item Not Included in Solicitation				500	linear foot	$ 15.00	$ 7,500.00	
PNC2117271B1--01-353	PIPE RAIL FOR GUARDRAIL	50	linear foot	$ 15.00	$ 750.00	500	linear foot	$ 10.00	$ 5,000.00	50%
PNC2117271B1--01-354	RETROFIT EXIST GUARDRAIL-PEDESTRIAN/CYCLE PIPE RAIL	50	linear foot	$ 100.00	$ 5,000.00	New Line Item				
PNC2117271B1--01-355	SPECIAL GUARDRAIL POST	5	each	$ 400.00	$ 2,000.00	10	each	$ 50.00	$ 500.00	700%
PNC2117271B1--01-356	GUARDRAIL-BRIDGE ANCHORAGE ASSEMBLY	5	each	$ 250.00	$ 1,250.00	5	each	$ 300.00	$ 1,500.00	-17%
PNC2117271B1--01-357	GUARDRAIL-BRIDGE ANCHORAGE ASSEMBLY, INSTALL	Line Item Not Included in Solicitation				5	each	$ 300.00	$ 1,500.00	-100%
PNC2117271B1--01-358	GUARDRAIL-BRIDGE ANCHORAGE ASSEMBLY RELOCATE	5	each	$ 250.00	$ 1,250.00	5	each	$ 300.00	$ 1,500.00	-17%
PNC2117271B1--01-359	GUARDRAIL-BRIDGE ANCHORAGE ASSEMBLY REMOVE	5	each	$ 25.00	$ 125.00	5	each	$ 50.00	$ 250.00	-50%
PNC2117271B1--01-360	GUARDRAIL REMOVAL	1000	linear foot	$ 5.00	$ 5,000.00	500	linear foot	$ 10.00	$ 5,000.00	-50%
PNC2117271B1--01-361	GUARDRAIL POST- SPECIAL LENGTH	Line Item Not Included in Solicitation				5	each	$ 100.00	$ 500.00	
PNC2117271B1--01-362	GUARDRAIL , ANCHORAGE CONCRETE CONCRETE BARRIER	Line Item Not Included in Solicitation				5	each	$ 250.00	$ 1,250.00	
PNC2117271B1--01-363	GUARDRAIL , POST REPLACEMENT, REGULAR	Line Item Not Included in Solicitation				5	each	$ 50.00	$ 250.00	
PNC2117271B1--01-364	GUARDRAIL END ANCHORAGE ASSEMBLY/END TREATMENT-FLARED	5	each	$ 750.00	$ 3,750.00	5	each	$ 300.00	$ 1,500.00	150%
PNC2117271B1--01-365	GUARDRAIL END ANCHORAGE ASSEMBLY/END TREATMENT-PARALLEL	5	each	$ 750.00	$ 3,750.00	5	each	$ 300.00	$ 1,500.00	150%
PNC2117271B1--01-366	GUARDRAIL END ANCHORAGE ASSEMBLY/END TREATMENT-TYPE II	5	each	$ 750.00	$ 3,750.00	5	each	$ 400.00	$ 2,000.00	88%
PNC2117271B1--01-367	GUARDRAIL END ANCHORAGE ASSEMBLY/END TREATMENT-TYPE CRT	5	each	$ 750.00	$ 3,750.00	5	each	$ 500.00	$ 2,500.00	50%
PNC2117271B1--01-368	GUARDRAIL END ANCHORAGE ASSEMBLY, DOUBLE FACE TERMINAL	Line Item Not Included in Solicitation				5	each	$ 200.00	$ 1,000.00	-100%
PNC2117271B1--01-369	GUARDRAIL PANELS-INSTALL 0 - 50 FEET	100	linear foot	$ 2.00	$ 200.00	500	linear foot	$ 2.00	$ 1,000.00	0%
PNC2117271B1--01-370	GUARDRAIL PANELS-SHOP BENT	100	linear foot	$ 10.00	$ 1,000.00	500	linear foot	$ 10.00	$ 5,000.00	0%
PNC2117271B1--01-371	GUARDRAIL PANELS-0-50 FEET	100	linear foot	$ 10.00	$ 1,000.00	500	linear foot	$ 10.00	$ 5,000.00	0%
PNC2117271B1--01-372	GUARDRAIL PANELS-51-200 FEET	Line Item Not Included in Solicitation				500	linear foot	$ 10.00	$ 5,000.00	
PNC2117271B1--01-373	GUARDRAIL PANELS- >200 FEET	Line Item Not Included in Solicitation				500	linear foot	$ 10.00	$ 5,000.00	
PNC2117271B1--01-374	GUARDRAIL PANELS- (REPLACE)	Line Item Not Included in Solicitation				500	linear foot	$ 10.00	$ 5,000.00	
PNC2117271B1--01-375	GUARDRAIL PANELS- (REPLACE) (SHOP BENT)	Line Item Not Included in Solicitation				500	linear foot	$ 10.00	$ 5,000.00	
PNC2117271B1--01-376	GUARDRAIL THRIE BEAM-REPLACE	100	linear foot	$ 10.00	$ 1,000.00	500	linear foot	$ 10.00	$ 5,000.00	0%
PNC2117271B1--01-377	THRIE BEAM (TRANSITION SECTION)	Line Item Not Included in Solicitation				5	each	$ 100.00	$ 500.00	
PNC2117271B1--01-378	GUARDRAIL-RESET	100	linear foot	$ 8.00	$ 800.00	500	linear foot	$ 2.00	$ 1,000.00	300%
PNC2117271B1--01-379	6"X8"X14" TIMBER OFFSET BLOCK, F&I	Line Item Not Included in Solicitation				60	each	$ 5.00	$ 300.00	-100%
PNC2117271B1--01-380	6"X8"22" TIMBER OFFSET BLOCK FOR THRIE-MEAM, F&I	Line Item Not Included in Solicitation				60	each	$ 20.00	$ 1,200.00	-100%

PNC2117271B1--01-381	P-BLOCK , PLASTIC OFFSET BLOCK, APL 563-000-005-F&I	Line Item Not Included in Solicitation				60	each	$ 5.00	$ 300.00	-100%
PNC2117271B1--01-382	THRIE BEAM BLOCK, APL 536-00-007 F&I	Line Item Not Included in Solicitation				60	each	$ 20.00	$ 1,200.00	-100%
PNC2117271B1--01-383	BARRIERS DELINEATORS	30	each	$ 12.00	$ 360.00	100	each	$ 5.00	$ 500.00	140%
PNC2117271B1--01-384	RIPRAP FABRIC-FORMED CONCRETE, 8' FILTER POINTS	Line Item Not Included in Solicitation				100	square yard	$ 60.00	$ 6,000.00	
PNC2117271B1--01-385	RETAINING WALL SYSTEM PERMANENT EXCLUDING BARRIER	100	square foot	$ 50.00	$ 5,000.00	100	square foot	$ 40.00	$ 4,000.00	25%
PNC2117271B1--01-386	RETAINING WALL SYSTEM PERMANENT-WIDENING ATTACHED TO EXISTING WALL	100	square foot	$ 30.00	$ 3,000.00	100	square foot	$ 60.00	$ 6,000.00	-50%
PNC2117271B1--01-387	FENCING TYPE B 0.0-6.0 STANDARD	1000	linear foot	$ 30.00	$ 30,000.00	200	linear foot	$ 30.00	$ 6,000.00	0%
PNC2117271B1--01-388	FENCING TYPE B 6.1-8.0 STANDARD	100	linear foot	$ 41.00	$ 4,100.00	200	linear foot	$ 30.00	$ 6,000.00	37%
PNC2117271B1--01-389	FENCING TYPE B 8.1-10.0 STANDARD	50	linear foot	$ 42.00	$ 2,100.00	200	linear foot	$ 35.00	$ 7,000.00	20%
PNC2117271B1--01-390	FENCING TYPE B 0.5-6.0 W/ VINYL COATING	50	linear foot	$ 60.00	$ 3,000.00	200	linear foot	$ 35.00	$ 7,000.00	71%
PNC2117271B1--01-391	FENCING TYPE B 6.1-8.0 W/ VINYL COATING	50	linear foot	$ 65.00	$ 3,250.00	200	linear foot	$ 35.00	$ 7,000.00	86%
PNC2117271B1--01-392	FENCING TYPE B 8.1-10.0 W/ VINYL COATING	50	linear foot	$ 80.00	$ 4,000.00	200	linear foot	$ 35.00	$ 7,000.00	129%
PNC2117271B1--01-393	FENCING TYPE B 5.1-6.0 W/BARBED WIRE ATTACHMENT	20	linear foot	$ 12.50	$ 250.00	200	linear foot	$ 12.50	$ 2,500.00	0%
PNC2117271B1--01-394	FENCING TYPE B 6.1-7.0 W/BARBED WIRE ATTACHMENT	20	linear foot	$ 13.00	$ 260.00	200	linear foot	$ 13.00	$ 2,600.00	0%
PNC2117271B1--01-395	FENCING TYPE B 8.1-10.0 W/BARBED WIRE ATTACHMENT	20	linear foot	$ 13.00	$ 260.00	200	linear foot	$ 13.00	$ 2,600.00	0%
PNC2117271B1--01-396	FENCING TYPE B 0.0-6.0 RESET EXISTING	50	linear foot	$ 5.00	$ 250.00	200	linear foot	$ 5.00	$ 1,000.00	0%
PNC2117271B1--01-397	FENCING TYPE B 6.1-8.0 RESET EXISTING	50	linear foot	$ 5.00	$ 250.00	200	linear foot	$ 5.00	$ 1,000.00	0%
PNC2117271B1--01-398	FENCING TYPE B 0.0-10.0 RELOCATE	50	linear foot	$ 5.00	$ 250.00	200	linear foot	$ 5.00	$ 1,000.00	0%
PNC2117271B1--01-399	FENCING TYPE B TOP RAIL	100	linear foot	$ 6.00	$ 600.00	200	linear foot	$ 3.00	$ 600.00	100%
PNC2117271B1--01-400	FENCE GATE TYPE B SINGLE 0-6.0 OPENING	1	each	$ 600.00	$ 600.00	2	each	$ 500.00	$ 1,000.00	20%
PNC2117271B1--01-401	FENCE GATE TYPE B SINGLE 6.1-20.0 OPENING	2	each	$ 900.00	$ 1,800.00	2	each	$ 800.00	$ 1,600.00	13%
PNC2117271B1--01-402	FENCE GATE TYPE B DOUBLE 6.1-18.0 OPENING	1	each	$ 650.00	$ 650.00	2	each	$ 750.00	$ 1,500.00	-13%
PNC2117271B1--01-403	FENCE GATE TYPE B DOUBLE 18.1-24 OPENING	1	each	$ 900.00	$ 900.00	2	each	$ 1,000.00	$ 2,000.00	-10%
PNC2117271B1--01-404	FENCE GATE TYPE B DOUBLE 24.1-30.0 OPENING	1	each	$ 1,200.00	$ 1,200.00	2	each	$ 1,350.00	$ 2,700.00	-11%
PNC2117271B1--01-405	FENCE GATE TYPE B DOUBLE GREATER THAN 30 OPENING	1	each	$ 1,400.00	$ 1,400.00	2	each	$ 1,500.00	$ 3,000.00	-7%
PNC2117271B1--01-406	FENCE GATE TYPE B SLIDING/CANTILEVER 6.1-12 OPENING	1	each	$ 1,150.00	$ 1,150.00	2	each	$ 1,200.00	$ 2,400.00	-4%
PNC2117271B1--01-407	FENCE GATE TYPE B SLIDING/CANTILEVER 12.1-18 OPENING	1	each	$ 1,150.00	$ 1,150.00	2	each	$ 1,200.00	$ 2,400.00	-4%
PNC2117271B1--01-408	FENCE GATE TYPE B SLIDING/CANTILEVER 18.1-20 OPENING	1	each	$ 1,400.00	$ 1,400.00	2	each	$ 1,500.00	$ 3,000.00	-7%
PNC2117271B1--01-409	FENCE GATE TYPE B SLIDING/CANTILEVER 20.1-24 OPENING	1	each	$ 1,500.00	$ 1,500.00	2	each	$ 1,600.00	$ 3,200.00	-6%
PNC2117271B1--01-410	FENCE GATE TYPE B SLIDING/CANTILEVER 24.1-30 OPENING	1	each	$ 1,800.00	$ 1,800.00	2	each	$ 2,000.00	$ 4,000.00	-10%
PNC2117271B1--01-411	FENCE GATE TYPE B SLIDING/CANTILEVER GREATER THAN 30 OPENING	1	each	$ 2,900.00	$ 2,900.00	2	each	$ 3,000.00	$ 6,000.00	-3%
PNC2117271B1--01-412	PERFORMANCE TURF HYDROSEED ONLY	1000	square yard	$ 0.75	$ 750.00	10000	square yard	$ 1.00	$ 10,000.00	-25%
PNC2117271B1--01-413	PERFORMANCE TURF BONDED FIBER MATRIX ONLY	200	square yard	$ 0.50	$ 100.00	1000	square yard	$ 0.75	$ 750.00	-33%
PNC2117271B1--01-414	PERFORMANCE TURF SEED AND MULCH ONLY	200	square yard	$ 1.50	$ 300.00	2000	square yard	$ 2.00	$ 4,000.00	-25%
PNC2117271B1--01-415	PERFORMANCE TURF SOD	30000	square yard	$ 6.50	$ 195,000.00	10000	square yard	$ 5.00	$ 50,000.00	30%
PNC2117271B1--01-416	MULCH REPLACEMENT	50	cubic yard	$ 75.00	$ 3,750.00	100	cubic yard	$ 85.00	$ 8,500.00	-12%
PNC2117271B1--01-417	PLASTIC EROSION MAT TURF REINFORCED MAT TYPE 1	100	square yard	$ 7.00	$ 700.00	100	square yard	$ 24.00	$ 2,400.00	-71%
PNC2117271B1--01-418	PLASTIC EROSION MAT TURF REINFORCED MAT TYPE 2	100	square yard	$ 9.00	$ 900.00	100	square yard	$ 38.00	$ 3,800.00	-76%
PNC2117271B1--01-419	PLASTIC EROSION MAT TURF REINFORCED MAT TYPE 3	100	square yard	$ 12.00	$ 1,200.00	100	square yard	$ 36.00	$ 3,600.00	-67%
PNC2117271B1--01-420	MISCELLANEOUS GROUND COVER/SHRUBS INSTALLATION (1-GALLON CONTAINER)	200	each	$ 10.00	$ 2,000.00	New Line Item				
PNC2117271B1--01-421	MISCELLANEOUS GROUND COVER/SHRUBS INSTALLATION (3-GALLON CONTAINER)	200	each	$ 18.00	$ 3,600.00	New Line Item				
PNC2117271B1--01-422	MISCELLANEOUS GROUND COVER/SHRUBS INSTALLATION (7-GALLON CONTAINER)	200	each	$ 50.00	$ 10,000.00	New Line Item				
PNC2117271B1--01-423	MISCELLANEOUS SMALL TREES - UP TO 10 OVERALL HEIGHT	50	each	$ 325.00	$ 16,250.00	New Line Item				
PNC2117271B1--01-424	MISCELLANEOUS LARGE TREES 10-12 OVERALL HEIGHT	50	each	$ 450.00	$ 22,500.00	New Line Item				
PNC2117271B1--01-425	MISCELLANEOUS LARGE TREES 13-18 OVERALL HEIGHT	1000	linear foot	$ 50.00	$ 50,000.00	New Line Item				
PNC2117271B1--01-426	FLORIDA THATCH PALM - UP TO 12 OVERALL HEIGHT	100	linear foot	$ 30.00	$ 3,000.00	New Line Item				
PNC2117271B1--01-427	ROYSTONEA SPP. (ROYAL PALM) PLANT UP TO 12 OVERALL HEIGHT	100	linear foot	$ 35.00	$ 3,500.00	New Line Item				
PNC2117271B1--01-428	ROYSTONEA SPP. (ROYAL PALM) PLANT 13-20 OVERALL HEIGHT	200	linear foot	$ 45.00	$ 9,000.00	New Line Item				
PNC2117271B1--01-429	SABAL PALMETTO (CABBAGE PALM) UP TO 12 OVERALL HEIGHT	200	linear foot	$ 27.00	$ 5,400.00	New Line Item				
PNC2117271B1--01-430	SABAL PALMETTO (CABBAGE PALM) 13-20 OVERALL HEIGHT	400	linear foot	$ 21.00	$ 8,400.00	New Line Item				
PNC2117271B1--01-431	DELONIX REGIA (ROYAL POINCIANA) PLANT UP TO 12 OVERALL HEIGHT	100	feet	$ 45.00	$ 4,500.00	New Line Item				
PNC2117271B1--01-432	DELONIX REGIA (ROYAL POINCIANA) PLANT 13-20 OVERALL HEIGHT	100	feet	$ 57.00	$ 5,700.00	New Line Item				
PNC2117271B1--01-433	LARGERSTROEMIA INDICA (CRAPE MYRTLE) PLANT UP TO 12 OVERALL HEIGHT	200	feet	$ 45.00	$ 9,000.00	New Line Item				
PNC2117271B1--01-434	BURSERA SIMARUBA (GUMBO LIMBO) PLANT UP TO 12 OVERALL HEIGHT	200	feet	$ 45.00	$ 9,000.00	New Line Item				
PNC2117271B1--01-435	BURSERA SIMARUBA (GUMBO LIMBO) PLANT 13-20 OVERALL HEIGHT	200	feet	$ 57.00	$ 11,400.00	New Line Item				
PNC2117271B1--01-436	QUERCUS VIRGINIANA (LIVE OAK) PLANT UP TO 12 OVERALL HEIGHT	200	feet	$ 45.00	$ 9,000.00	New Line Item				
PNC2117271B1--01-437	QUERCUS VIRGINIANA (LIVE OAK) PLANT 13-20 OVERALL HEIGHT	500	feet	$ 57.00	$ 28,500.00	New Line Item				
PNC2117271B1--01-438	TAXODIUM SPP. (CYPRESS BALD OR POND) PLANT UP TO 12 OVERALL HEIGHT	200	feet	$ 45.00	$ 9,000.00	New Line Item				
PNC2117271B1--01-439	TAXODIUM SPP. (CYPRESS BALD OR POND) PLANT 13-20 OVERALL HEIGHT	500	feet	$ 57.00	$ 28,500.00	New Line Item				
PNC2117271B1--01-440	BULNESIA ARBOREA (VERA WOOD) PLANT UP TO 12 OVERALL HEIGHT	500	feet	$ 15.00	$ 7,500.00	New Line Item				
PNC2117271B1--01-441	TOPSOIL 50% PLANTING SOIL AND 50% SAND	500	cubic yard	$ 25.00	$ 12,500.00	100	cubic yard	$ 75.00	$ 7,500.00	-67%
PNC2117271B1--01-442	FERTILIZER 50 LB. BAG	5	each	$ 50.00	$ 250.00	New Line Item				
PNC2117271B1--01-443	FERTILIZER 40 LB. BAG	Line Item Not Included in Solicitation				20	each	$ 60.00	$ 1,200.00	
PNC2117271B1--01-444	FERTILIZER F&I	Line Item Not Included in Solicitation				5	ton	$ 1,080.00	$ 5,400.00	
PNC2117271B1--01-445	WATERING (per KGAL)	200	each	$ 80.00	$ 16,000.00	100	each	$ 65.00	$ 6,500.00	23%
PNC2117271B1--01-446	ROOT BARRIER	2000	linear foot	$ 30.00	$ 60,000.00	1000	linear foot	$ 35.00	$ 35,000.00	-14%
PNC2117271B1--01-447	SPRINKLER HEADS POP-UP ROTATING	300	each	$ 80.00	$ 24,000.00	100	each	$ 65.00	$ 6,500.00	23%
PNC2117271B1--01-448	4 PVC PIPE SCH. 40	500	linear foot	$ 9.25	$ 4,625.00	100	linear foot	$ 10.00	$ 1,000.00	-8%
PNC2117271B1--01-449	3 PVC PIPE SCH. 40	500	linear foot	$ 9.20	$ 4,600.00	100	linear foot	$ 10.00	$ 1,000.00	-8%
PNC2117271B1--01-450	2 PVC PIPE SCH. 40	500	linear foot	$ 9.15	$ 4,575.00	200	linear foot	$ 9.00	$ 1,800.00	2%
PNC2117271B1--01-451	1 PVC PIPE SCH. 40	1500	linear foot	$ 9.50	$ 14,250.00	500	linear foot	$ 9.00	$ 4,500.00	6%
PNC2117271B1--01-452	3/4 PVC PIPE SCH. 40	500	linear foot	$ 10.00	$ 5,000.00	300	linear foot	$ 8.00	$ 2,400.00	25%
PNC2117271B1--01-453	ROOT PRUNING/TREE TRIMMING CREW 3-PERSON CREW 4 HR MINIMUM CHARGE	100	hour	$ 200.00	$ 20,000.00	30	hour	$ 250.00	$ 7,500.00	-20%
PNC2117271B1--01-454	TREE REMOVAL CREW 3-PERSON CREW 4 HR MINIMUM CHARGE	10	hour	$ 200.00	$ 2,000.00	30	hour	$ 100.00	$ 3,000.00	100%
PNC2117271B1--01-455	STUMP GRINDER 2-PERSON CREW 4 HR MINIMUM CHARGE	10	hour	$ 200.00	$ 2,000.00	30	hour	$ 80.00	$ 2,400.00	150%
PNC2117271B1--01-456	GRAFFITI REMOVAL 100 SF MINIMUM CHARGE	5000	square foot	$ 0.25	$ 1,250.00	New Line Item				
PNC2117271B1--01-457	CERTIFIED ARBORIST	20	hour	$ 175.00	$ 3,500.00	30	hour	$ 100.00	$ 3,000.00	75%
PNC2117271B1--01-458	ADDITIONAL LABORER	2000	hour	$ 50.00	$ 100,000.00	1000	hour	$ 45.00	$ 45,000.00	11%
PNC2117271B1--01-459	SKILLED LABORER	100	hour	$ 60.00	$ 6,000.00	New Line Item				
PNC2117271B1--01-460	MASTER ELECTRICIAN	10	hour	$ 250.00	$ 2,500.00	30	hour	$ 190.00	$ 5,700.00	32%
PNC2117271B1--01-461	FDOT CERTIFIED SIGNAL TECHNICIAN 2-PERSON CREW	10	hour	$ 350.00	$ 3,500.00	30	hour	$ 350.00	$ 10,500.00	0%
PNC2117271B1--01-462	DIVER (REGULAR TIME) 4 HOUR MINIMUM CHARGE	10	hour	$ 300.00	$ 3,000.00	120	hour	$ 300.00	$ 36,000.00	0%
PNC2117271B1--01-463	QUALIFIED CONSTRUCTION TRAINING QUALIFICATION PROGRAM (CTQP) ASPHALT PAVING	100	hour	$ 130.00	$ 13,000.00	40	hour	$ 100.00	$ 4,000.00	30%
PNC2117271B1--01-464	TRENCH BOX UP TO 10	20	day	$ 500.00	$ 10,000.00	New Line Item				
PNC2117271B1--01-465	TRUCK MOUNTED ATTENUATOR (TMA) HOURS MINIMUM CHARGE	20	hour	$ 220.00	$ 4,400.00	New Line Item				
PNC2117271B1--01-466	SERVICE TRUCK & OPERATOR PERSONNEL LIFT TO 35 FT HIGH ACCESS 4 HR MINIMUM CHAR	10	hour	$ 100.00	$ 1,000.00	30	hour	$ 125.00	$ 3,750.00	-20%
PNC2117271B1--01-467	BUCKET TRUCK & OPERATOR 50 FT REACH 4 HR MINIMUM CHARGE	10	hour	$ 125.00	$ 1,250.00	30	hour	$ 150.00	$ 4,500.00	-17%
PNC2117271B1--01-468	D3 OR D5 BACKHOE & OPERATOR	30	hour	$ 175.00	$ 5,250.00	100	hour	$ 175.00	$ 17,500.00	0%
PNC2117271B1--01-469	CRANE & OPERATOR INSTALLATIONS LESS THAN 85 FT HIGH AND 22 TON 4 HR MINIMUM CH	5	hour	$ 125.00	$ 625.00	30	hour	$ 130.00	$ 3,900.00	-4%
PNC2117271B1--01-470	VAC TRUCK 3-PERSON CREW 4 HR MINIMUM CHARGE	100	hour	$ 300.00	$ 30,000.00	30	hour	$ 300.00	$ 9,000.00	0%
PNC2117271B1--01-471	SMALL ALL WHEEL DRIVE OUTDOOR VACUUM SWEEPER AND OPERATOR FOR SIDEWALKS PARKIN	500	hour	$ 35.00	$ 17,500.00	New Line Item				
PNC2117271B1--01-472	MECHANICAL ROADWAY SWEEPER AND OPERATOR (4 HR MINIMUM CHARGE)	100	hour	$ 55.00	$ 5,500.00	New Line Item				
PNC2117271B1--01-473	HYDRO MOWER AND OPERATOR UP TO 20 LF DECK (4 HRS MINIMUM CHARGE)	50	hour	$ 125.00	$ 6,250.00	New Line Item				
PNC2117271B1--01-474	SKID STEER LOADER & OPERATOR 1850 LB MINIMUM 4 HR MINIMUM CHARGE	200	hour	$ 155.00	$ 31,000.00	30	hour	$ 125.00	$ 3,750.00	24%
PNC2117271B1--01-475	GRAPPLE TRUCK/SELF LOADER AND OPERATOR SINGLE AXLE 16 CUBIC YARDS MINIMUM CAPA	50	hour	$ 150.00	$ 7,500.00	New Line Item				
PNC2117271B1--01-476	DOZER D3 & OPERATOR 4 HR MINIMUM CHARGE	20	hour	$ 80.00	$ 1,600.00	30	hour	$ 80.00	$ 2,400.00	0%
PNC2117271B1--01-477	DOZER D4 & OPERATOR 4 HR MINIMUM CHARGE	20	hour	$ 110.00	$ 2,200.00	30	hour	$ 110.00	$ 3,300.00	0%
PNC2117271B1--01-478	DOZER D5 & OPERATOR 4 HR MINIMUM CHARGE	20	hour	$ 115.00	$ 2,300.00	30	hour	$ 115.00	$ 3,450.00	0%

PNC2117271B1--01-479	EXCAVATOR 30000 LB & OPERATOR 4 HR MINIMUM CHARGE	20	hour	$ 140.00	$ 2,800.00	30	hour	$ 100.00	$ 3,000.00	40%
PNC2117271B1--01-480	EXCAVATOR 75000 LB & OPERATOR 4 HR MINIMUM CHARGE	20	hour	$ 145.00	$ 2,900.00	30	hour	$ 125.00	$ 3,750.00	16%
PNC2117271B1--01-481	VIBRATORY ROLLER 5 TON & OPERATOR 4 HR MINIMUM CHARGE	20	hour	$ 55.00	$ 1,100.00	30	hour	$ 45.00	$ 1,350.00	22%
PNC2117271B1--01-482	VIBRATORY ROLLER 10 TON & OPERATOR 4 HR MINIMUM CHARGE	20	hour	$ 65.00	$ 1,300.00	30	hour	$ 65.00	$ 1,950.00	0%
PNC2117271B1--01-483	BARGE & OPERATOR 31 FT LENGTH MINIMUM 4 HR MINIMUM CHARGE	20	hour	$ 300.00	$ 6,000.00	8	hour	$ 500.00	$ 4,000.00	-40%
PNC2117271B1--01-484	BARGE WITH CRANE & OPERATOR 20 TON RATED 4 HR MINIMUM CHARGE	20	hour	$ 400.00	$ 8,000.00	8	hour	$ 800.00	$ 6,400.00	-50%
PNC2117271B1--01-485	BOAT/WATER CRAFT WITH MOTOR 30 FT LENGTH MAXIMUM 4 HR MINIMUM CHARGE	100	hour	$ 225.00	$ 22,500.00	8	hour	$ 200.00	$ 1,600.00	13%
PNC2117271B1--01-486	DUMP TRUCK & OPERATOR SINGLE-AXLE 5 CY MINIMUM CAPACITY 4 HR MINIMUM CHARGE	20	hour	$ 50.00	$ 1,000.00	30	hour	$ 45.00	$ 1,350.00	11%
PNC2117271B1--01-487	DUMP TRUCK & OPERATOR TRI-AXLE 16 CY MINIMUM CAPACITY 4 HR MINIMUM CHARGE	50	hour	$ 80.00	$ 4,000.00	30	hour	$ 65.00	$ 1,950.00	23%
PNC2117271B1--01-488	TRASH TRUCK RENTAL & OPERATOR 16 YD MINIMUM VOLUME 4 HR MINIMUM CHARGE	20	hour	$ 40.00	$ 800.00	30	hour	$ 45.00	$ 1,350.00	-11%
PNC2117271B1--01-489	PORTABLE TOILET SINGLE STALL	200	week	$ 100.00	$ 20,000.00	12	week	$ 300.00	$ 3,600.00	-67%
PNC2117271B1--01-490	CONDUIT FURNISH & INSTALL OPEN TRENCH	150	linear foot	$ 25.00	$ 3,750.00	300	linear foot	$ 20.00	$ 6,000.00	25%
PNC2117271B1--01-491	CONDUIT FURNISH & INSTALL DIRECTIONAL BORE 6 TO < 12	50	linear foot	$ 30.00	$ 1,500.00	300	linear foot	$ 30.00	$ 9,000.00	0%
PNC2117271B1--01-492	CONDUIT FURNISH & INSTALL DIRECTIONAL BORE 12 TO < 18	20	linear foot	$ 30.00	$ 600.00	300	linear foot	$ 30.00	$ 9,000.00	0%
PNC2117271B1--01-493	CONDUIT FURNISH & INSTALL DIRECTIONAL BORE 18 TO < 24	20	linear foot	$ 50.00	$ 1,000.00	300	linear foot	$ 50.00	$ 15,000.00	0%
PNC2117271B1--01-494	CONDUIT FURNISH & INSTALL DIRECTIONAL BORE 24 TO < 36	20	linear foot	$ 100.00	$ 2,000.00	300	linear foot	$ 100.00	$ 30,000.00	0%
PNC2117271B1--01-495	CONDUIT FURNISH & INSTALL DIRECTIONAL BORE 36 TO < 48	20	linear foot	$ 100.00	$ 2,000.00	300	linear foot	$ 100.00	$ 30,000.00	0%
PNC2117271B1--01-496	CONDUIT FURNISH & INSTALL DIRECTIONAL BORE 48 TO < 60	20	linear foot	$ 100.00	$ 2,000.00	300	linear foot	$ 100.00	$ 30,000.00	0%
PNC2117271B1--01-497	CONDUIT FURNISH & INSTALL DIRECTIONAL BORE > 60	20	linear foot	$ 100.00	$ 2,000.00	300	linear foot	$ 100.00	$ 30,000.00	0%
PNC2117271B1--01-498	CONDUIT FURNISH & INSTALL ABOVEGROUND	20	linear foot	$ 20.00	$ 400.00	300	linear foot	$ 20.00	$ 6,000.00	0%
PNC2117271B1--01-499	SIGNAL CABLE NEW OR RECONSTRUCTED FURNISH & INSTALL	150	linear foot	$ 15.00	$ 2,250.00	300	linear foot	$ 20.00	$ 6,000.00	-25%
PNC2117271B1--01-500	SIGNAL CABLE REPAIR/ REPLACE/OTHER FURNISH & INSTALL	100	linear foot	$ 10.00	$ 1,000.00	300	linear foot	$ 30.00	$ 9,000.00	-67%
PNC2117271B1--01-501	SIGNAL CABLE ADJUST	100	linear foot	$ 10.00	$ 1,000.00	300	linear foot	$ 10.00	$ 3,000.00	0%
PNC2117271B1--01-502	SIGNAL CABLE REMOVE	100	linear foot	$ 4.00	$ 400.00	300	linear foot	$ 5.00	$ 1,500.00	-20%
PNC2117271B1--01-503	PULL & SPLICE BOX 13 x 24 COVER SIZE	20	each	$ 1,100.00	$ 22,000.00	20	each	$ 400.00	$ 8,000.00	175%
PNC2117271B1--01-504	PULL & SPLICE BOX 13 x 24 COVER SIZE TIER 22	5	each	$ 1,200.00	$ 6,000.00	5	each	$ 1,500.00	$ 7,500.00	-20%
PNC2117271B1--01-505	WATER METER BOX	20	each	$ 1,100.00	$ 22,000.00	New Line Item				
PNC2117271B1--01-506	PULL & SPLICE BOX INSTALL	50	each	$ 500.00	$ 25,000.00	10	each	$ 700.00	$ 7,000.00	-29%
PNC2117271B1--01-507	PULL & SPLICE BOX RELOCATE	20	each	$ 800.00	$ 16,000.00	10	each	$ 1,000.00	$ 10,000.00	-20%
PNC2117271B1--01-508	PULL & SPLICE BOX REMOVE	5	each	$ 400.00	$ 2,000.00	10	each	$ 600.00	$ 6,000.00	-33%
PNC2117271B1--01-509	ELECTRICAL SERVICE WIRE	100	linear foot	$ 10.00	$ 1,000.00	50	linear foot	$ 15.00	$ 750.00	-33%
PNC2117271B1--01-510	ALUMINUM SIGNALS POLE PEDESTAL	1	each	$ 1,500.00	$ 1,500.00	5	each	$ 2,250.00	$ 11,250.00	-33%
PNC2117271B1--01-511	ALUMINUM SIGNALS POLE PEDESTRIAN DETECTOR POST	1	each	$ 1,600.00	$ 1,600.00	5	each	$ 2,250.00	$ 11,250.00	-29%
PNC2117271B1--01-512	ALUMINUM SIGNALS POLE RELOCATE	1	each	$ 1,500.00	$ 1,500.00	5	each	$ 2,250.00	$ 11,250.00	-33%
PNC2117271B1--01-513	ALUMINUM SIGNALS POLE REMOVE	1	each	$ 300.00	$ 300.00	5	each	$ 500.00	$ 2,500.00	-40%
PNC2117271B1--01-514	PEDESTRIAN SIGNAL LED COUNTDOWN 1 WAY	1	assembly	$ 1,100.00	$ 1,100.00	5	assembly	$ 1,500.00	$ 7,500.00	-27%
PNC2117271B1--01-515	PEDESTRIAN SIGNAL LED-COUNT DOWN 2 WAYS	1	assembly	$ 1,750.00	$ 1,750.00	5	assembly	$ 2,650.00	$ 13,250.00	-34%
PNC2117271B1--01-516	PEDESTRIAN SIGNAL RELOCATE	5	assembly	$ 500.00	$ 2,500.00	5	assembly	$ 750.00	$ 3,750.00	-33%
PNC2117271B1--01-517	PEDESTRIAN SIGNAL REMOVED PEDESTRIAN SIGNAL POLE/PEDESTAL TO REMAIN	5	assembly	$ 125.00	$ 625.00	5	assembly	$ 175.00	$ 875.00	-29%
PNC2117271B1--01-518	PEDESTRIAN SIGNAL LED 1 DIRECTION	2	assembly	$ 900.00	$ 1,800.00	5	assembly	$ 1,000.00	$ 5,000.00	-10%
PNC2117271B1--01-519	PEDESTRIAN SIGNAL LED 2 DIRECTIONS	1	assembly	$ 2,500.00	$ 2,500.00	5	assembly	$ 2,750.00	$ 13,750.00	-9%
PNC2117271B1--01-520	PEDESTRIAN DETECTOR STANDARD	5	each	$ 250.00	$ 1,250.00	5	each	$ 300.00	$ 1,500.00	-17%
PNC2117271B1--01-521	PEDESTRIAN DETECTOR ACCESSIBLE	5	each	$ 1,500.00	$ 7,500.00	5	each	$ 1,600.00	$ 8,000.00	-6%
PNC2117271B1--01-522	PEDESTRIAN DETECTOR RELOCATE	5	each	$ 225.00	$ 1,125.00	5	each	$ 300.00	$ 1,500.00	-25%
PNC2117271B1--01-523	PEDESTRIAN DETECTOR REMOVE- POLE/PEDESTAL TO REMAIN	5	each	$ 85.00	$ 425.00	5	each	$ 100.00	$ 500.00	-15%
PNC2117271B1--01-524	SINGLE POST SIGN GROUND MOUNT UP TO 12 SF	10	assembly	$ 800.00	$ 8,000.00	15	assembly	$ 400.00	$ 6,000.00	100%
PNC2117271B1--01-525	SINGLE POST SIGN GROUND MOUNT SLIP BASE ONLY UP TO 12 SF	5	assembly	$ 515.00	$ 2,575.00	15	assembly	$ 600.00	$ 9,000.00	-14%
PNC2117271B1--01-526	SINGLE POWDER COATED POST SIGN GROUND MOUNT UP TO 12 SF	5	assembly	$ 525.00	$ 2,625.00	40	assembly	$ 450.00	$ 18,000.00	17%
PNC2117271B1--01-527	SINGLE POWDER COATED POST SIGN GROUND MOUNT SLIP BASE ONLY UP TO 12 SF	2	assembly	$ 700.00	$ 1,400.00	15	assembly	$ 725.00	$ 10,875.00	-3%
PNC2117271B1--01-528	SINGLE POST SIGN GROUND MOUNT 12-20 SF	5	assembly	$ 1,500.00	$ 7,500.00	15	assembly	$ 500.00	$ 7,500.00	200%
PNC2117271B1--01-529	SINGLE POST SIGN GROUND MOUNT SLIP BASE ONLY 12-20 SF	2	assembly	$ 1,500.00	$ 3,000.00	10	assembly	$ 700.00	$ 7,000.00	114%
PNC2117271B1--01-530	SINGLE POWDER COATED POST SIGN GROUND MOUNT 12-20 SF	2	assembly	$ 1,510.00	$ 3,020.00	20	assembly	$ 850.00	$ 17,000.00	78%
PNC2117271B1--01-531	SINGLE POWDER COATED POST SIGN GROUND MOUNT SLIP BASE ONLY 12-20 SF	2	assembly	$ 1,100.00	$ 2,200.00	10	assembly	$ 1,125.00	$ 11,250.00	-2%
PNC2117271B1--01-532	SINGLE POST SIGN GROUND MOUNT 21-30 SF	2	assembly	$ 800.00	$ 1,600.00	5	assembly	$ 800.00	$ 4,000.00	0%
PNC2117271B1--01-533	SINGLE POST SIGN GROUND MOUNT SLIP BASE ONLY 21-30 SF	2	assembly	$ 900.00	$ 1,800.00	10	assembly	$ 1,000.00	$ 10,000.00	-10%
PNC2117271B1--01-534	SINGLE POWDER COATED POST SIGN GROUND MOUNT 21-30 SF	2	assembly	$ 900.00	$ 1,800.00	20	assembly	$ 1,300.00	$ 26,000.00	-31%
PNC2117271B1--01-535	SINGLE POWDER COATED POST SIGN GROUND MOUNT SLIP BASE ONLY 21-30 SF	2	assembly	$ 1,100.00	$ 2,200.00	10	assembly	$ 1,350.00	$ 13,500.00	-19%
PNC2117271B1--01-536	SINGLE POST SIGN GROUND MOUNT 31+ SF	2	assembly	$ 1,000.00	$ 2,000.00	10	assembly	$ 1,000.00	$ 10,000.00	0%
PNC2117271B1--01-537	SINGLE POST SIGN GROUND MOUNT SLIP BASE ONLY 31+ SF	2	assembly	$ 1,200.00	$ 2,400.00	10	assembly	$ 1,250.00	$ 12,500.00	-4%
PNC2117271B1--01-538	SINGLE POWDER COATED POST SIGN GROUND MOUNT 31+ SF	2	assembly	$ 1,300.00	$ 2,600.00	10	assembly	$ 1,500.00	$ 15,000.00	-13%
PNC2117271B1--01-539	SINGLE POWDER COATED POST SIGN GROUND MOUNT SLIP BASE ONLY 31+ SF	2	assembly	$ 1,500.00	$ 3,000.00	10	assembly	$ 1,750.00	$ 17,500.00	-14%
PNC2117271B1--01-540	SINGLE POST SIGN GROUND MOUNT IN-STREET FLEXIBLE POST SIGN	2	assembly	$ 75.00	$ 150.00	10	assembly	$ 100.00	$ 1,000.00	-25%
PNC2117271B1--01-541	SINGLE POST SIGN BARRIER MOUNT INDEX 11871 UP TO 12 SF	2	assembly	$ 100.00	$ 200.00	10	assembly	$ 100.00	$ 1,000.00	0%
PNC2117271B1--01-542	SINGLE POWDER COATED POST SIGN BARRIER MOUNT INDEX 11871 UP TO 12 SF	2	assembly	$ 1,000.00	$ 2,000.00	10	assembly	$ 115.00	$ 1,150.00	770%
PNC2117271B1--01-543	SINGLE POST SIGN INSTALL	5	assembly	$ 300.00	$ 1,500.00	15	assembly	$ 50.00	$ 750.00	500%
PNC2117271B1--01-544	SINGLE POST SIGN RELOCATE	15	assembly	$ 360.00	$ 5,400.00	10	assembly	$ 135.00	$ 1,350.00	167%
PNC2117271B1--01-545	SINGLE POST SIGN REMOVE	5	assembly	$ 135.00	$ 675.00	15	assembly	$ 125.00	$ 1,875.00	8%
PNC2117271B1--01-546	MULTI- POST SIGN GROUND MOUNT UP TO 50 SF	1	assembly	$ 1,000.00	$ 1,000.00	5	assembly	$ 1,500.00	$ 7,500.00	-33%
PNC2117271B1--01-547	MULTI- POST SIGN GROUND MOUNT 51-100 SF	1	assembly	$ 1,200.00	$ 1,200.00	5	assembly	$ 1,600.00	$ 8,000.00	-25%
PNC2117271B1--01-548	MULTI- POST SIGN GROUND MOUNT RELOCATE	1	assembly	$ 750.00	$ 750.00	5	assembly	$ 1,550.00	$ 7,750.00	-52%
PNC2117271B1--01-549	MULTI- POST SIGN GROUND MOUNT REMOVE	5	assembly	$ 750.00	$ 3,750.00	5	assembly	$ 500.00	$ 2,500.00	50%
PNC2117271B1--01-550	SIGN EXISTING- REMOVE SPAN WIRE	5	assembly	$ 100.00	$ 500.00	5	assembly	$ 100.00	$ 500.00	0%
PNC2117271B1--01-551	SIGN EXISTING- REMOVE BRIDGE MOUNTED	5	assembly	$ 200.00	$ 1,000.00	5	assembly	$ 200.00	$ 1,000.00	0%
PNC2117271B1--01-552	SIGN EXISTING- RELOCATE SPAN WIRE	5	assembly	$ 85.00	$ 425.00	5	assembly	$ 100.00	$ 500.00	-15%
PNC2117271B1--01-553	SIGN EXISTING- RELOCATE BRIDGE MOUNTED	5	assembly	$ 250.00	$ 1,250.00	5	assembly	$ 300.00	$ 1,500.00	-17%
PNC2117271B1--01-554	SIGN PANELS 15 OR LESS	5	each	$ 195.00	$ 975.00	10	each	$ 200.00	$ 2,000.00	-3%
PNC2117271B1--01-555	SIGN PANELS 16-100	5	each	$ 350.00	$ 1,750.00	5	each	$ 205.00	$ 1,025.00	71%
PNC2117271B1--01-556	SIGN PANELS RELOCATE 15 OR LESS	5	each	$ 85.00	$ 425.00	10	each	$ 100.00	$ 1,000.00	-15%
PNC2117271B1--01-557	SIGN PANELS RELOCATE 16-100	5	each	$ 95.00	$ 475.00	5	each	$ 105.00	$ 525.00	-10%
PNC2117271B1--01-558	SIGN PANELS REMOVE	5	each	$ 50.00	$ 250.00	5	each	$ 45.00	$ 225.00	11%
PNC2117271B1--01-559	SIGN FLASHING BEACON GROUND MOUNT	1	each	$ 2,000.00	$ 2,000.00	5	each	$ 1,500.00	$ 7,500.00	33%
PNC2117271B1--01-560	SIGN FLASHING BEACON OVERHEAD MOUNT	1	each	$ 1,600.00	$ 1,600.00	5	each	$ 1,600.00	$ 8,000.00	0%
PNC2117271B1--01-561	OBJECT MARKER TYPE 1	5	each	$ 60.00	$ 300.00	5	each	$ 75.00	$ 375.00	-20%
PNC2117271B1--01-562	OBJECT MARKER TYPE 2	5	each	$ 60.00	$ 300.00	5	each	$ 75.00	$ 375.00	-20%
PNC2117271B1--01-563	OBJECT MARKER TYPE 3	5	each	$ 60.00	$ 300.00	5	each	$ 75.00	$ 375.00	-20%
PNC2117271B1--01-564	OBJECT MARKER TYPE 4	5	each	$ 60.00	$ 300.00	5	each	$ 75.00	$ 375.00	-20%
PNC2117271B1--01-565	DELINEATOR FLEXIBLE TUBULAR	5	each	$ 35.00	$ 175.00	5	each	$ 55.00	$ 275.00	-36%
PNC2117271B1--01-566	DELINEATOR NON-FLEXIBLE	5	each	$ 25.00	$ 125.00	5	each	$ 35.00	$ 175.00	-29%
PNC2117271B1--01-567	DELINEATOR FLEXIBLE HIGH VISIBILITY MEDIAN	5	each	$ 85.00	$ 425.00	5	each	$ 100.00	$ 500.00	-15%
PNC2117271B1--01-568	DELINEATOR FLEXIBLE HIGH PERFORMANCE 48	5	each	$ 85.00	$ 425.00	5	each	$ 100.00	$ 500.00	-15%
PNC2117271B1--01-569	RETRO-REFLECTIVE PAVEMENT MARKERS	1000	each	$ 10.00	$ 10,000.00	1400	each	$ 10.00	$ 14,000.00	0%
PNC2117271B1--01-570	PAINTED PAVEMENT MARKINGS STANDARD WHITE YELLOW OR BLUE SOLID 6	35000	linear foot	$ 2.25	$ 78,750.00	10000	linear foot	$ 2.00	$ 20,000.00	13%
PNC2117271B1--01-571	PAINTED PAVEMENT MARKINGS STANDARD WHITE OR YELLOW SOLID 8	1500	linear foot	$ 2.50	$ 3,750.00	500	linear foot	$ 2.15	$ 1,075.00	16%
PNC2117271B1--01-572	PAINTED PAVEMENT MARKINGS STANDARD WHITE OR YELLOW SOLID FOR CROSSWALK	1500	linear foot	$ 2.75	$ 4,125.00	3000	linear foot	$ 2.35	$ 7,050.00	17%
PNC2117271B1--01-573	PAINTED PAVEMENT MARKINGS STANDARD WHITE OR YELLOW SOLID FOR DIAGONAL	150	linear foot	$ 3.25	$ 487.50	500	linear foot	$ 2.50	$ 1,250.00	30%
PNC2117271B1--01-574	PAINTED PAVEMENT MARKINGS STANDARD WHITE OR YELLOW SOLID FOR STOP LINE	1000	linear foot	$ 3.75	$ 3,750.00	2000	linear foot	$ 3.00	$ 6,000.00	25%
PNC2117271B1--01-575	PAINTED PAVEMENT MARKINGS STANDARD WHITE OR YELLOW SKIP 10-30 OR 3-9 SKIP	3000	linear foot	$ 2.75	$ 8,250.00	5000	linear foot	$ 2.00	$ 10,000.00	38%
PNC2117271B1--01-576	PAINTED PAVEMENT MARKINGS STANDARD WHITE MESSAGE OR SYMBOL	5	each	$ 300.00	$ 1,500.00	30	each	$ 100.00	$ 3,000.00	200%

PNC2117271B1--01-577	PAINTED PAVEMENT MARKINGS STANDARD WHITE ARROWS	100	each	$ 200.00	$ 20,000.00	30	each	$ 100.00	$ 3,000.00	100%
PNC2117271B1--01-578	PAINTED PAVEMENT MARKINGS STANDARD WHITE YIELD LINE	50	linear foot	$ 1.75	$ 87.50	100	linear foot	$ 18.00	$ 1,800.00	-90%
PNC2117271B1--01-579	PAINTED PAVEMENT MARKINGS STANDARD WHITE OR YELLOW ISLAND NOSE	50	square foot	$ 4.75	$ 237.50	100	square foot	$ 5.00	$ 500.00	-5%
PNC2117271B1--01-580	PAINTED PAVEMENT MARKINGS STANDARD BLACK SOLID 6	100	linear foot	$ 0.25	$ 25.00	100	linear foot	$ 0.50	$ 50.00	-50%
PNC2117271B1--01-581	PAINTED PAVEMENT MARKINGS STANDARD BLACK SKIP 6	100	linear foot	$ 0.25	$ 25.00	100	linear foot	$ 0.50	$ 50.00	-50%
PNC2117271B1--01-582	PAINTED PAVEMENT MARKINGS STANDARD BLUE MESSAGE	5	each	$ 50.00	$ 250.00	5	each	$ 50.00	$ 250.00	0%
PNC2117271B1--01-583	THERMOPLASTIC STANDARD WHITE SOLID 6	35000	linear foot	$ 2.50	$ 87,500.00	10000	linear foot	$ 2.50	$ 25,000.00	0%
PNC2117271B1--01-584	THERMOPLASTIC STANDARD WHITE SOLID 8	3000	linear foot	$ 3.00	$ 9,000.00	500	linear foot	$ 3.00	$ 1,500.00	0%
PNC2117271B1--01-585	THERMOPLASTIC STANDARD WHITE SOLID FOR CROSSWALK AND ROUNDABOUT 12	3500	linear foot	$ 3.75	$ 13,125.00	1000	linear foot	$ 3.50	$ 3,500.00	7%
PNC2117271B1--01-586	THERMOPLASTIC STANDARD WHITE OR YELLOW SOLID FOR DIAGONAL OR CHEVRON 18	500	linear foot	$ 4.25	$ 2,125.00	500	linear foot	$ 4.00	$ 2,000.00	6%
PNC2117271B1--01-587	THERMOPLASTIC STANDARD WHITE SOLID FOR STOP LINE OR CROSSWALK 24	1200	linear foot	$ 4.75	$ 5,700.00	500	linear foot	$ 4.50	$ 2,250.00	6%
PNC2117271B1--01-588	THERMOPLASTIC STANDARD WHITE OR YELLOW SKIP 10-30 OR 3-9 SKIP 6	5000	linear foot	$ 2.75	$ 13,750.00	5000	linear foot	$ 2.50	$ 12,500.00	10%
PNC2117271B1--01-589	THERMOPLASTIC STANDARD WHITE DOTTED/GUIDELINE / 6-10 GAP EXTENSION 6	500	linear foot	$ 1.75	$ 875.00	500	linear foot	$ 2.00	$ 1,000.00	-13%
PNC2117271B1--01-590	THERMOPLASTIC STANDARD WHITE MESSAGE OR SYMBOL	10	each	$ 175.00	$ 1,750.00	50	each	$ 150.00	$ 7,500.00	17%
PNC2117271B1--01-591	THERMOPLASTIC STANDARD WHITE ARROW	100	each	$ 250.00	$ 25,000.00	100	each	$ 200.00	$ 20,000.00	25%
PNC2117271B1--01-592	THERMOPLASTIC STANDARD BLUE SOLID 6	30	linear foot	$ 2.00	$ 60.00	5	linear foot	$ 2.00	$ 10.00	0%
PNC2117271B1--01-593	THERMOPLASTIC STANDARD BLUE MESSAGE	5	each	$ 35.00	$ 175.00	5	each	$ 50.00	$ 250.00	-30%
PNC2117271B1--01-594	THERMOPLASTIC REMOVE EXISTING THERMOPLASTIC PAVEMENT MARKINGS	3500	square foot	$ 7.00	$ 24,500.00	2000	square foot	$ 7.00	$ 14,000.00	0%
PNC2117271B1--01-595	MINIMUM CHARGE FOR STRIPING FOR EACH PROJECT	5	each	$ 2,000.00	$ 10,000.00	5	each	$ 750.00	$ 3,750.00	167%
PNC2117271B1--01-596	LIGHTING CONDUCTORS INSULATED NO. 10 OR SMALLER	100	linear foot	$ 6.00	$ 600.00	200	linear foot	$ 8.00	$ 1,600.00	-25%
PNC2117271B1--01-597	LIGHTING CONDUCTORS INSULATED NO. 8 TO NO. 6	100	linear foot	$ 6.25	$ 625.00	200	linear foot	$ 8.00	$ 1,600.00	-22%
PNC2117271B1--01-598	LIGHTING CONDUCTORS INSULATED NO. 4 TO NO. 2	100	linear foot	$ 11.00	$ 1,100.00	200	linear foot	$ 8.00	$ 1,600.00	38%
PNC2117271B1--01-599	LIGHTING CONDUCTORS INSULATED NO. 1 TO NO. 0	100	linear foot	$ 13.00	$ 1,300.00	200	linear foot	$ 8.00	$ 1,600.00	63%
PNC2117271B1--01-600	LIGHTING CONDUCTORS PLACE OUT OF SERVICE	100	linear foot	$ 3.00	$ 300.00	200	linear foot	$ 8.00	$ 1,600.00	-63%
PNC2117271B1--01-601	LIGHT POLE COMPLETE SPECIAL FOUNDATION WIND SPEED 150 POLE HEIGHT 40	1	each	$ 3,000.00	$ 3,000.00	5	each	$ 3,000.00	$ 15,000.00	0%
PNC2117271B1--01-602	LIGHT POLE COMPLETE SPECIAL FOUNDATION WIND SPEED 150 POLE HEIGHT 45	1	each	$ 3,250.00	$ 3,250.00	5	each	$ 3,250.00	$ 16,250.00	0%
PNC2117271B1--01-603	LIGHT POLE COMPLETE SPECIAL FOUNDATION WIND SPEED 150 POLE HEIGHT 50	1	each	$ 3,500.00	$ 3,500.00	5	each	$ 3,500.00	$ 17,500.00	0%
PNC2117271B1--01-604	LIGHT POLE COMPLETE WIND SPEED 150 POLE HEIGHT 40	1	each	$ 2,500.00	$ 2,500.00	5	each	$ 2,500.00	$ 12,500.00	0%
PNC2117271B1--01-605	LIGHT POLE COMPLETE WIND SPEED 150 POLE HEIGHT 45	1	each	$ 2,750.00	$ 2,750.00	5	each	$ 2,750.00	$ 13,750.00	0%
PNC2117271B1--01-606	LIGHT POLE COMPLETE WIND SPEED 150 POLE HEIGHT 50	1	each	$ 3,000.00	$ 3,000.00	5	each	$ 3,000.00	$ 15,000.00	0%
PNC2117271B1--01-607	LIGHT POLE COMPLETE RELOCATE	1	each	$ 1,000.00	$ 1,000.00	5	each	$ 1,100.00	$ 5,500.00	-9%
PNC2117271B1--01-608	LIGHT POLE COMPLETE REMOVE	1	each	$ 600.00	$ 600.00	5	each	$ 800.00	$ 4,000.00	-25%
PNC2117271B1--01-609	LOAD CENTER SECONDARY VOLTAGE	1	each	$ 7,500.00	$ 7,500.00	2	each	$ 5,000.00	$ 10,000.00	50%
PNC2117271B1--01-610	GROUND ROD	20	linear foot	$ 35.00	$ 700.00	100	linear foot	$ 50.00	$ 5,000.00	-30%
PNC2117271B1--01-611	UTILITY PIPE PVC CASING/CONDUIT 0-6	100	linear foot	$ 15.00	$ 1,500.00	100	linear foot	$ 15.00	$ 1,500.00	0%
PNC2117271B1--01-612	UTILITY PIPE DI/CI WATER / SEWER 5- 7.9	5	linear foot	$ 225.00	$ 1,125.00	100	linear foot	$ 45.00	$ 4,500.00	400%
PNC2117271B1--01-613	UTILITY PIPE DI/CI WATER / SEWER 8 - 19.9	5	linear foot	$ 475.00	$ 2,375.00	100	linear foot	$ 100.00	$ 10,000.00	375%
PNC2117271B1--01-614	UTILITY PIPE DI/CI WATER / SEWER 20- 49.9	5	linear foot	$ 700.00	$ 3,500.00	100	linear foot	$ 275.00	$ 27,500.00	155%
PNC2117271B1--01-615	UTILITY PIPE REMOVE & DISPOSE 5-7.9	20	linear foot	$ 15.00	$ 300.00	100	linear foot	$ 15.00	$ 1,500.00	0%
PNC2117271B1--01-616	UTILITY PIPE REMOVE & DISPOSE 8-19.9	20	linear foot	$ 20.00	$ 400.00	100	linear foot	$ 20.00	$ 2,000.00	0%
PNC2117271B1--01-617	UTILITY PIPE REMOVE & DISPOSE 20-49.9	20	linear foot	$ 25.00	$ 500.00	100	linear foot	$ 30.00	$ 3,000.00	-17%
PNC2117271B1--01-618	UTILITY FITTINGS DI/CI CAP/PLUG 5 - 7.9	5	each	$ 250.00	$ 1,250.00	5	each	$ 50.00	$ 250.00	400%
PNC2117271B1--01-619	UTILITY FITTINGS DI/CI CAP/PLUG 8 - 19.9	5	each	$ 450.00	$ 2,250.00	5	each	$ 200.00	$ 1,000.00	125%
PNC2117271B1--01-620	UTILITY FITTINGS DI/CI CAP/PLUG 20 - 49.9	5	each	$ 500.00	$ 2,500.00	5	each	$ 500.00	$ 2,500.00	0%
PNC2117271B1--01-621	UTILITY FITTINGS REMOVE & DISPOSAL	5	each	$ 25.00	$ 125.00	5	each	$ 25.00	$ 125.00	0%
PNC2117271B1--01-622	UTILITY FIXTURES 0 - 1.9 VALVE ASSEMBLY	5	each	$ 50.00	$ 250.00	5	each	$ 50.00	$ 250.00	0%
PNC2117271B1--01-623	UTILITY FIXTURES 5.0 - 7.9 TAPPING SADDLE/SLEEVE	2	each	$ 700.00	$ 1,400.00	5	each	$ 650.00	$ 3,250.00	8%
PNC2117271B1--01-624	UTILITY FIXTURES 5.0 - 7.9 VALVE ASSEMBLY	2	each	$ 1,200.00	$ 2,400.00	5	each	$ 725.00	$ 3,625.00	66%
PNC2117271B1--01-625	UTILITY FIXTURES 5.0 - 7.9 VAC/AIR ASSEMBLY	2	each	$ 100.00	$ 200.00	5	each	$ 100.00	$ 500.00	0%
PNC2117271B1--01-626	UTILITY FIXTURES 5-7.9 LINE STOP ASSEMBLY	2	each	$ 250.00	$ 500.00	5	each	$ 250.00	$ 1,250.00	0%
PNC2117271B1--01-627	UTILITY FIXTURES 5-7.9 MECHANICAL JOINT RESTRAINT	5	each	$ 250.00	$ 1,250.00	5	each	$ 75.00	$ 375.00	233%
PNC2117271B1--01-628	FIRE HYDRANT ADJUST AND MODIFY	1	each	$ 1,000.00	$ 1,000.00	5	each	$ 1,000.00	$ 5,000.00	0%
PNC2117271B1--01-629	FIRE HYDRANT RELOCATE	1	each	$ 750.00	$ 750.00	5	each	$ 1,000.00	$ 5,000.00	-25%
PNC2117271B1--01-630	FOOT PAY ITEM # NA:HAMELIA PATENS 'CALUSA' (DWARF FIREBUSH) PLANT.5'-20' OVERALL HEIGHT	Line Item Not Included in Solicitation				400	feet	$ 25.00	$ 10,000.00	-100%
PNC2117271B1--01-631	FOOT PAY ITEM # NA:ACACIA CHORIOPHYLLA (CINNECORD) PLANT. 5'-20' OVERALL HEIGHT	Line Item Not Included in Solicitation				400	feet	$ 20.00	$ 8,000.00	-100%
PNC2117271B1--01-632	FOOT PAY ITEM # NA:CEIBA SPECIOSA (SILK FLOSS) PLANT	Line Item Not Included in Solicitation				400	feet	$ 20.00	$ 8,000.00	-100%
PNC2117271B1--01-633	FOOT PAY ITEM # NA:FILICIUM DECIPIENS (JAPANESE FERN)	Line Item Not Included in Solicitation				400	feet	$ 10.00	$ 4,000.00	-100%
PNC2117271B1--01-634	FOOT PAY ITEM # NA:SWEET BAY MAGNOLIA (MAGNOLIA VIRGINIANA) PLANT. 8'-20' OVERALL HEIGHT	Line Item Not Included in Solicitation				400	feet	$ 10.00	$ 4,000.00	-100%
PNC2117271B1--01-635	MAGNOLIA GRANDIFLORA 'UTILE GEM' (SOUTHERN MAGNOLIA 'UTILE GEM) PLANT. 8'-20' OVERALL	Line Item Not Included in Solicitation				400	feet	$ 10.00	$ 4,000.00	-100%
PNC2117271B1--01-636	DELONIX REGIA (ROYAL POINCIANA) PLANT, 8'-20' OVERALL HEIGHT	Line Item Not Included in Solicitation				400	feet	$ 35.00	$ 14,000.00	-100%
PNC2117271B1--01-637	LAGERSTROEMIA SPECIOSA (QUEEN'S CRAPE MYRTLE) PLANT. 8'-20' OVERALL HEIGHT	Line Item Not Included in Solicitation				400	feet	$ 15.00	$ 6,000.00	-100%
PNC2117271B1--01-638	LARGERSTROEMIA INDICA (CRAPE MYRTLE) PLANT 8'-20' OVERALL HEIGHT	Line Item Not Included in Solicitation				400	feet	$ 30.00	$ 12,000.00	-100%
PNC2117271B1--01-639	JACARANDA MIMOSIFOLIA (JACARANDA) PLANT. 8'-20' OVERALL HEIGHT	Line Item Not Included in Solicitation				400	feet	$ 30.00	$ 12,000.00	-100%
PNC2117271B1--01-640	APPLE BLOSSOM (CASSIA JAVANICA) PLANT 8'-20' OVERALL HEIGHT	Line Item Not Included in Solicitation				400	feet	$ 20.00	$ 8,000.00	-100%
PNC2117271B1--01-641	GOLDEN SHOWER (CASSIA FISTULA) PLANT, 8'-20' OVERALL HEIGHT	Line Item Not Included in Solicitation				400	feet	$ 25.00	$ 10,000.00	-100%
PNC2117271B1--01-642	ACER RUBRUM (RED MAPLE) PLANT.8'-20' OVERALL HEIGHT	Line Item Not Included in Solicitation				400	feet	$ 20.00	$ 8,000.00	-100%
PNC2117271B1--01-643	BURSERA SIMARUBA (GUMBO LIMBO) PLANT, 8'-20' OVERALL HEIGHT	Line Item Not Included in Solicitation				400	feet	$ 25.00	$ 10,000.00	-100%
PNC2117271B1--01-644	CHRYSOPHYLLUM OUVIFORME (SATIN LEAF)PLANT.8'-20' OVERALL HEIGHT	Line Item Not Included in Solicitation				400	feet	$ 20.00	$ 8,000.00	-100%
PNC2117271B1--01-645	COCCOLOBA DIVERSIFOLIA (PIGEON PLUM) PLANT,8'-20' OVERALL HEIGHT	Line Item Not Included in Solicitation				400	feet	$ 20.00	$ 8,000.00	-100%
PNC2117271B1--01-646	CONOCARPUS ERECTUS (GREEN BUTIONWOOD.STD. OR BUSH) PLANT.8'-20' OVERALL HEIGHT	Line Item Not Included in Solicitation				400	feet	$ 25.00	$ 10,000.00	-100%
PNC2117271B1--01-647	CONOCARPUS ERECTUS VAR. SERICEUS (SILVER BUTIONWOOD, STD.OR BUSH) PLANT.8'-20' OVERALL HEIGHT	Line Item Not Included in Solicitation				400	feet	$ 30.00	$ 12,000.00	-100%
PNC2117271B1--01-648	CORDIA SEBESTENA (ORANGE GEIGER TREE) PLANT,8'-20' OVERALL HEIGHT	Line Item Not Included in Solicitation				400	feet	$ 30.00	$ 12,000.00	-100%
PNC2117271B1--01-649	EUGENIA SPP.(STOPPERS:RED.WHITE.REDBERRY.SPANISH) PLANT.8'-20' OVERALL	Line Item Not Included in Solicitation				400	feet	$ 10.00	$ 4,000.00	-100%
PNC2117271B1--01-650	ILEX CASSINE (DAHOON HOLLY) PLANT, 8'-20' OVERALL HEIGHT	Line Item Not Included in Solicitation				400	feet	$ 20.00	$ 8,000.00	-100%
PNC2117271B1--01-651	LYSILOMA LATISILIOUA (WILD TAMARIND) PLANT. 8'-20' OVERALL HEIGHT	Line Item Not Included in Solicitation				400	feet	$ 20.00	$ 8,000.00	-100%
PNC2117271B1--01-652	MYRCIANTHES FRAGRANS (SIMPSON STOPPER) PLANT. 8'-20' OVERALL HEIGHT	Line Item Not Included in Solicitation				400	feet	$ 20.00	$ 8,000.00	-100%
PNC2117271B1--01-653	PINUS ELLIOTIIVAR.OENSA (SOUTH FLORIDA SLASH PINE) PLANT. 8"20' OVERALL HEIGHT	Line Item Not Included in Solicitation				400	feet	$ 20.00	$ 8,000.00	-100%
PNC2117271B1--01-654	QUERCUS VIRGINIA NA (LIVE OAK) PLANT,8'-20' OVERALL HEIGHT	Line Item Not Included in Solicitation				400	feet	$ 40.00	$ 16,000.00	-100%
PNC2117271B1--01-655	SIMAROUBA GLAUCA (PARADISE TREE) PLANT,8'-20' OVERALL HEIGHT	Line Item Not Included in Solicitation				400	feet	$ 20.00	$ 8,000.00	-100%
PNC2117271B1--01-656	SWIETENIA MAHAGONI (MAHOGANY) PLANT, 8'-20' OVERALL HEIGHT	Line Item Not Included in Solicitation				400	feet	$ 20.00	$ 8,000.00	-100%
PNC2117271B1--01-657	TAXODIUM SPP.(CYPRESS. BALD OR POND) PLANT.8'-20' OVERALL HEIGHT	Line Item Not Included in Solicitation				400	feet	$ 20.00	$ 8,000.00	-100%
PNC2117271B1--01-658	BAUHINIA X BLAKEANA (HONG KONG ORCHID TREEI PLANT),8'-20' OVERALL HEIGHT	Line Item Not Included in Solicitation				400	feet	$ 10.00	$ 4,000.00	-100%
PNC2117271B1--01-659	BOMBAX CEIBA (RED SILK COTTON TREEI PLANT,8' 20' OVERALL HEIGHT	Line Item Not Included in Solicitation				400	feet	$ 20.00	$ 8,000.00	-100%
PNC2117271B1--01-660	BULNESIA ARBOREA (VERA WOOD) PLANT 8'-20' OVERALL HEIGHT	Line Item Not Included in Solicitation				400	feet	$ 20.00	$ 8,000.00	-100%
PNC2117271B1--01-661	COCCOLOBA UVIFERA (SEA GRAPE) PLANT 8' 20' OVERALL HEIGHT	Line Item Not Included in Solicitation				400	feet	$ 20.00	$ 8,000.00	-100%
PNC2117271B1--01-662	COCHLOSPER MUM VITIFOLIUM BUTTERCUP TREEIPLANT. 8'-20' OVERALL HEIGHT	Line Item Not Included in Solicitation				400	feet	$ 20.00	$ 8,000.00	-100%
PNC2117271B1--01-663	ERIOBOTRYA DEFLEXA (BRONZE LOQUIATI PLANT, 8' 20' OVERALL HEIGHT	Line Item Not Included in Solicitation				400	feet	$ 20.00	$ 8,000.00	-100%
PNC2117271B1--01-664	ERIOBOTRYA JAPONICA (LOOUAT) PLANT.8'-20' OVERALL HEIGHT	Line Item Not Included in Solicitation				400	feet	$ 20.00	$ 8,000.00	-100%
PNC2117271B1--01-665	LITCHI CHINENSIS (LITCHI) PLANT. 8'- 20' OVERALL HEIGHT	Line Item Not Included in Solicitation				400	feet	$ 10.00	$ 4,000.00	-100%
PNC2117271B1--01-666	MACADAMIA INTEGRIFOLIA IIMACAOAMIA NUTI PLANT.8'-20' OVERALL HEIGHT	Line Item Not Included in Solicitation				400	feet	$ 10.00	$ 4,000.00	-100%
PNC2117271B1--01-667	MANGIFERA INDICA (MANGO) PLANT. 8' 20' OVERALL HEIGHT	Line Item Not Included in Solicitation				400	feet	$ 20.00	$ 8,000.00	-100%
PNC2117271B1--01-668	MANILKARA ROXBURGHIANA II MIMUSOPSI PLANT. 8'-20' OVERALL HEIGHT	Line Item Not Included in Solicitation				400	feet	$ 10.00	$ 4,000.00	-100%
PNC2117271B1--01-669	MURRAYA PANICULATA (ORANGE. JASMINEIPLANT 8' 20' OVERALL HEIGHT	Line Item Not Included in Solicitation				400	feet	$ 10.00	$ 4,000.00	-100%
PNC2117271B1--01-670	PELTOPHORUMPTEROCARPUM IIYELLOW POINCIANA\ PLANT. 8'-20' OVERALL HEIGHT	Line Item Not Included in Solicitation				400	feet	$ 20.00	$ 8,000.00	-100%
PNC2117271B1--01-671	PISCIDIA PISCIPULA (JAMAICAN DOGWOOD\ PLANT 8' 20' OVERALL HEIGHT	Line Item Not Included in Solicitation				400	feet	$ 15.00	$ 6,000.00	-100%
PNC2117271B1--01-672	TECOMA STANS (YELLOW ELDER) PLANT.8' 20' OVERALL HEIGHT	Line Item Not Included in Solicitation				400	feet	$ 15.00	$ 6,000.00	-100%
PNC2117271B1--01-673	SIDEROXYLON FOETIDISSIMUM (MASTIC) PLANT 8' 20' OVERALL HEIGHT	Line Item Not Included in Solicitation				400	feet	$ 15.00	$ 6,000.00	-100%
PNC2117271B1--01-674	MORUS RUBRA (RED MULBERRY) PLANT.8' 20' OVERALL HEIGHT	Line Item Not Included in Solicitation				400	feet	$ 15.00	$ 6,000.00	-100%

PNC2117271B1--01-675	LIOUIDAMBAR STYRACIFLUA (SWEET GUM) PLANT 8'-20' OVERALL HEIGHT	Line Item Not Included in Solicitation		400	feet	$ 10.00	$ 4,000.00	-100%
PNC2117271B1--01-676	PLATANUS OCCIDENTALIS (AMERICAN SYCAMORE IPLANT. 8'-20' OVERALL HEIGHT	Line Item Not Included in Solicitation		400	feet	$ 10.00	$ 4,000.00	-100%
PNC2117271B1--01-677	BISMARCKIA NOBILIS (BISMARK PALM) PLANT.5' 20' OVERALL HEIGHT	Line Item Not Included in Solicitation		400	feet	$ 20.00	$ 8,000.00	-100%
PNC2117271B1--01-678	COCCOTHRINAX ARGENTATA (FLORIDA SILVER PALM) PLANT.5' 20' OVERALL HEIGHT	Line Item Not Included in Solicitation		400	feet	$ 10.00	$ 4,000.00	-100%
PNC2117271B1--01-679	PHOENIX ROEBELENII (PYGMY DATE PALM) PLANT 5' 20' OVERALL HEIGHT	Line Item Not Included in Solicitation		400	feet	$ 10.00	$ 4,000.00	-100%
PNC2117271B1--01-680	ROYSTONEA SPP.(ROYAL PALM) PLANT.5' 20' OVERALL HEIGHT	Line Item Not Included in Solicitation		400	feet	$ 40.00	$ 16,000.00	-100%
PNC2117271B1--01-681	SABAL PALMETTO (CABBAGE PALM) PLANT 5' 20' OVERALL HEIGHT	Line Item Not Included in Solicitation		400	feet	$ 35.00	$ 14,000.00	-100%
PNC2117271B1--01-682	THRINAX MORRISII (KEY THATCH PALM) 5' 20' OVERALL HEIGHT	Line Item Not Included in Solicitation		400	feet	$ 10.00	$ 4,000.00	-100%
PNC2117271B1--01-683	THRINAX RACIATA (FLORIDA THATCH PALM) PLANT 5- 20-OVERALL HEIGHT	Line Item Not Included in Solicitation		400	feet	$ 10.00	$ 4,000.00	-100%
PNC2117271B1--01-684	WOOYETIA BIFURCATE (FOXTAIL PALM) PLANT,5'-20' OVERALL HEIGHT	Line Item Not Included in Solicitation		400	feet	$ 40.00	$ 16,000.00	-100%
PNC2117271B1--01-685	ILEX VOMITORIA 'NANA' (DWARF YAUPON HOLLY) PLANT,5' 20' OVERALL HEIGHT	Line Item Not Included in Solicitation		400	feet	$ 25.00	$ 10,000.00	-100%
PNC2117271B1--01-686	CAESALPINIA GRANADILLO (BRIDALVEIL TREE) PLANT.5' 20' OVERALL HEIGHT	Line Item Not Included in Solicitation		400	feet	$ 20.00	$ 8,000.00	-100%
PNC2117271B1--01-687	ACOELARRHAPHE WRIGHT (PAUROTIS PALM) PLANT,25 GALLON CONTAINER	Line Item Not Included in Solicitation		100	each	$ 50.00	$ 5,000.00	-100%
PNC2117271B1--01-688	AROISIA ESCALLONIOIOES (MARLBERRYI) PLANT 7-GALLON CONTAINER	Line Item Not Included in Solicitation		100	each	$ 20.00	$ 2,000.00	-100%
PNC2117271B1--01-689	BOURRERIA OVATA (BAHAMA STRONGBARKI PLANT,7-GALLON CONTAINER	Line Item Not Included in Solicitation		100	each	$ 20.00	$ 2,000.00	-100%
PNC2117271B1--01-690	CALYPTRANTHES PALLENS (SPICEWOOD) PLANT.7-GALLON CONTAINER	Line Item Not Included in Solicitation		100	each	$ 15.00	$ 1,500.00	-100%
PNC2117271B1--01-691	CAPPARIS CYNOPHALLOPHORA (JAMAICAN CAPER)PLANT, 7-GALLON CONTAINER	Line Item Not Included in Solicitation		100	each	$ 15.00	$ 1,500.00	-100%
PNC2117271B1--01-692	CITHAREXYLUM FRUCTICOSUM FIDDLEWOODI PLANT 7-GALLON CONTAINER	Line Item Not Included in Solicitation		100	each	$ 10.00	$ 1,000.00	-100%
PNC2117271B1--01-693	PITHECELLBIUM GUADALUPENSE (BLACKBEAD)PLANT 7-GALLON CONTAINER	Line Item Not Included in Solicitation		100	each	$ 15.00	$ 1,500.00	-100%
PNC2117271B1--01-694	SERONOA REPENS (SAW PALMETTO PALM)PLANT 7-GALLON CONTAINER	Line Item Not Included in Solicitation		100	each	$ 35.00	$ 3,500.00	-100%
PNC2117271B1--01-695	PALMI PLANT 7-GALLON CONTAINER LEATHER FERN) PLANT, 3-GALLON CONTAINER	Line Item Not Included in Solicitation		100	each	$ 12.00	$ 1,200.00	-100%
PNC2117271B1--01-696	BRYSONIMA LUCIDA (LOCUSTBER RY) PLANT, 3-GALLON CONTAINER	Line Item Not Included in Solicitation		100	each	$ 10.00	$ 1,000.00	-100%
PNC2117271B1--01-697	CALLICARPA AMERICANA (BEAUTYBERRY) PLANT 3-GALLON CONTAINER	Line Item Not Included in Solicitation		100	each	$ 5.00	$ 500.00	-100%
PNC2117271B1--01-698	CHRYSOBALANUS ICACO (COCOAPLUM) PLANT 3-GALLON CONTAINER	Line Item Not Included in Solicitation		100	each	$ 18.00	$ 1,800.00	-100%
PNC2117271B1--01-699	CONOCARPUS ERECTUS (BUTTONWOOD. SILVER OR GREEN) PLANT, 3-GALLON CONTAINER	Line Item Not Included in Solicitation		100	each	$ 18.00	$ 1,800.00	-100%
PNC2117271B1--01-700	FOOT PAY ITEM 11 NA: CORDIA GLOBOSA (BLOODBERRY) PLANT,3-GALLON CONTAINER	Line Item Not Included in Solicitation		100	each	$ 12.00	$ 1,200.00	-100%
PNC2117271B1--01-701	FORESTIERA SEGREGATA (FLORIDA PRIVET) PLANT, 3-GALLON CONTAINER	Line Item Not Included in Solicitation		100	each	$ 10.00	$ 1,000.00	-100%
PNC2117271B1--01-702	ILEX GLABRA (GALLBERRY) PLANT, 3-GALLON CONTAINER	Line Item Not Included in Solicitation		100	each	$ 10.00	$ 1,000.00	-100%
PNC2117271B1--01-703	ILEX VOMITORIA (ILEX SCHILLINGS) PLANT.3-GALLON CONTAINER	Line Item Not Included in Solicitation		100	each	$ 15.00	$ 1,500.00	-100%
PNC2117271B1--01-704	LICANIA MICHAUXII (GOPHER APPLE) PLANT,3-GALLON CONTAINER	Line Item Not Included in Solicitation		100	each	$ 12.00	$ 1,200.00	-100%
PNC2117271B1--01-705	LYONIA FERRUGINEA (RUSTY LYONIA) PLANT. 3-GALLON CONTAINER	Line Item Not Included in Solicitation		100	each	$ 14.00	$ 1,400.00	-100%
PNC2117271B1--01-706	MUHLENBERGIA CAPPILLARIS (MUHLY GRASS) PLANT.3-GALLON CONTAINER	Line Item Not Included in Solicitation		100	each	$ 20.00	$ 2,000.00	-100%
PNC2117271B1--01-707	MYRICA CERIFERA (WAX MYRTLE) PLANT.3-GALLON CONTAINER	Line Item Not Included in Solicitation		100	each	$ 10.00	$ 1,000.00	-100%
PNC2117271B1--01-708	MYRSINE RAPANEA (MYRSINE) PLANT, 3-GALLON CONTAINER	Line Item Not Included in Solicitation		100	each	$ 10.00	$ 1,000.00	-100%
PNC2117271B1--01-709	NEPHROLEPSIS EXALTATA (BOSTON FERN) PLANT,3-GALLON CONTAINER	Line Item Not Included in Solicitation		100	each	$ 10.00	$ 1,000.00	-100%
PNC2117271B1--01-710	PSYCHOTRIA BAHAMENSIS (BAHAMA COFFEE) PLANT 3-GALLON CONTAINER	Line Item Not Included in Solicitation		100	each	$ 10.00	$ 1,000.00	-100%
PNC2117271B1--01-711	PSYCHOTRIA NERVOSA (WILD COFFEE) PLANT,3-GALLON CONTAINER	Line Item Not Included in Solicitation		100	each	$ 10.00	$ 1,000.00	-100%
PNC2117271B1--01-712	COFFEE\ PLANT,3-GALLON CONTAINER PODS) PLANT 3-GALLON CONTAINER	Line Item Not Included in Solicitation		100	each	$ 10.00	$ 1,000.00	-100%
PNC2117271B1--01-713	TRIPSACUM DACTYLOIDES (FAKAHATCHEE GRASS) PLANT.3-GALLON CONTAINER	Line Item Not Included in Solicitation		100	each	$ 20.00	$ 2,000.00	-100%
PNC2117271B1--01-714	SURIANA MARITIME (BAY CEDAR) PLANT, 3-GALLON CONTAINER	Line Item Not Included in Solicitation		100	each	$ 12.00	$ 1,200.00	-100%
PNC2117271B1--01-715	VIBURNUM OBAVATA (WALTERS VIBURNUM)PLANT 3-GALLON CONTAINER	Line Item Not Included in Solicitation		100	each	$ 12.00	$ 1,200.00	-100%
PNC2117271B1--01-716	ZAMIA PUMILA (COONTIE) PLANT. 3- GALLON CONTAINER	Line Item Not Included in Solicitation		100	each	$ 20.00	$ 2,000.00	-100%
PNC2117271B1--01-717	EUPHORBIA MILII (DWARF CROWN OF THORNS, SHRUB) PLANT,3-GALLON CONTAINER	Line Item Not Included in Solicitation		100	each	$ 25.00	$ 2,500.00	-100%
PNC2117271B1--01-718	SCHEFFLERA ARBORICOLA (TRINETTE.SHRUB) PLANT.3-GALLON CONTAINER	Line Item Not Included in Solicitation		100	each	$ 25.00	$ 2,500.00	-100%
PNC2117271B1--01-719	RHAPHIOLEPIS INDICA (INDIA N HAWTHORN, SHRUBIPLANT,3 GALLON CONTAINER	Line Item Not Included in Solicitation		100	each	$ 25.00	$ 2,500.00	-100%
PNC2117271B1--01-720	CODIAEUM VARIEGATUM (GARDEN CROTON,SHRUB\ PLANT, 3-GALLON CONTAINER	Line Item Not Included in Solicitation		100	each	$ 25.00	$ 2,500.00	
		Total Bid Amount:	**$ 10,758,070.00**				**$ 8,816,010.00**	22%
		Allowances	**$ 700,000.00**				**$ 660,000.00**	
		Total Bid Amount with Allowances:	**$ 11,458,070.00**				**$ 9,476,010.00**	21%

This solicitation was estimated at $12,000,000 per year. Current contract, Contract No. C1347414B1 was utilized for price comparison.

Solicitation No. PNC2117271B1 has additional line items that are not on current contract, Contract No. C1347414B1. Thus, this is the reason in the difference in the reflected "Total Price Amount" (Solicitation No. PNC2117271B1's Total Price Amount is $11,458,070 and current Contract No. C1347414B1's Total Price Amount is $9,476,010).

Broward County Purchasing Division performed due dilligence by seeking procurements for the same or similar services. Florida Department of Transportation, Baker County and Palm Beach County were contacted for price comparison. Due to the specific items solicited, comprable pricing was not found. An internet search was executed and due to the specific items solicited, other comparable pricing was not found.

Bid Bond from Surety2000

DP Development of the Treasure Coast, LLC

Surety	Surety2000
Bid Bond Number	SFL18379681
Bond Type	0001
Bond Form	Bid Bond in accordance with Contract Specifications
Bid Date	11/26/2018
Bid ID	PNC2117271B1
Security Percent	5%
Job Description	Bid #PNC2117271B1 - General Roadway and Miscellaneous Construction

Agency ID	A12074229
Name	Sterling Seacrest
Address	2500 Cumberland Parkway Suite 400, Atlanta, Georgia 30339, United States
Phone	678-424-6506
Contact Name	Debra Johnson
Bond Status	
Execution Date	11/19/2018 5:14:30 PM
Executed By	Douglas L. Rieder 1640 Powers Ferry Rd, Marietta, Georgia 30067, United States 678-424-6500

Contractor ID	
Name	DP Development of the Treasure Coast, LLC
Contractor Tax ID	20-5822418
Assigned Contractor ID	7009954033
Address	1014 S Congress Ave, Palm Springs, Florida 33406, United States
Phone	561-584-4975

Name	Broward County Board of County Commissioners
Address	115 S. Andrews Ave Room 212, Fort Lauderdale, Florida 33301, United States

Surety ID	SD02027910
Name	North American Specialty Insurance Company
NAIC Number	29874
State of Incorporation	New Hampshire

Contact	
Address	1200 Main Street, Kansas City, Missouri 64105, United States
Phone	
Terror Rider	http://legacy.surety2000.com/Riders/SD02027910-Blkpoa.pdf

Hogu, Netanya

From:	Certificate of Insurance
Sent:	Monday, December 17, 2018 2:04 PM
To:	Cohen-Ebanks, Danea
Cc:	Byers, Angela
Subject:	FW: Request for Bid Bond Review: Bid No. PNC2117271B1 General Roadway and Miscellaneous Construction
Attachments:	Bid Bond _ Weekley Asphalt _ PNC2117271B1.pdf; Bid Bond _ DP Development _ PNC2117271B1.pdf

Good afternoon,

Western Surety Company is a valid Surety authorized to transact business in the state of Florida. This email serves as verification and approval of the Surety.

North American Specialty Insurance Company is a valid Surety authorized to transact business in the state of Florida. This email serves as verification and approval of the Surety.

Best regards,

Colleen Pounall, Risk Analyst
Risk Management Division
115 S Andrews Avenue, Suite 210
Fort Lauderdale, FL 33301
(954) 357-7224
www.broward.org

From: Cohen-Ebanks, Danea <DCohen@broward.org>
Sent: Friday, December 14, 2018 12:40 AM
To: Certificate of Insurance <CERTIFICATEOFINSURANCE@broward.org>
Cc: Byers, Angela <ABYERS@broward.org>
Subject: Request for Bid Bond Review: Bid No. PNC2117271B1 General Roadway and Miscellaneous Construction

Good Morning:

Please see attached bid bonds for your review.

Regards,

Danea Cohen-Ebanks
Purchasing Agent, Senior
Broward County Purchasing Division

BROWARD COUNTY FLORIDA

Contracts Central

Broward County Purchasing Division

Close

- Contracts Central
  - Administration
    - PO Admin
  - Fixed/Open Contracts
  - Work Auth
  - Projects
  - PURCHASING
    - Procurement
    - FileRoom DashBoard
    - FileRoom Insert
  - Favorites
    - Prime Vendor
    - Sub Vendor
    - Purchase Order
    - Evaluation
  - Log Off

Prime Vendor Dashboard - **DP DEVELOPMENT OF THE TREASURE COAST LLC**

VS0000003992 / VS00003992 - DP DEVELOPMENT OF THE TREASURE COAST LLC Prime Vendor Summary

2 OE: Open
Thres: Adv: **$1,655,760.65** PS: **$27,632,302.35** Total **$29,288,063.00** Used: **$34,353,087.35** Remain: **($5,065,024.35)**
3 OE: Expired Thres: Adv: **$33,365,653.99** Used: **$33,365,653.99** UnUsed: $0.00
5 OE: Total: Thres: **$62,653,716.99** Used: **$67,718,741.34** Remain: **($5,065,024.35)**
No Fixed Contracts

17 Final/Completed/Renewal Eval Have Been Completed (5 Yrs) For A Overall Average Of: 3.93
From Begining Of Advantage: First PO Issued Date: **07/20/2011**
Purchase Orders: **608 POs With A Total Amt Of: $69,218,769.30 Paid To Dt: ($62,086,203.56) Balance: $7,132,565.74**

Contracts | Purchase Orders | Evaluations | Sub Vendors | Documents | Finish

BROWARD COUNTY FLORIDA

Contracts Central

Broward County Purchasing Division

Close

- Contracts Central
  - Administration
    - PO Admin
  - Fixed/Open Contracts
  - Work Auth
  - Projects
  - PURCHASING
    - Procurement
    - FileRoom DashBoard
    - FileRoom Insert
  - Favorites
    - Prime Vendor
    - Sub Vendor
    - Purchase Order
    - Evaluation
  - Log Off

Prime Vendor Dashboard - **DP DEVELOPMENT OF THE TREASURE COAST LLC**

Archived Final/Complete/Renewal Evals | All Periodic Evals | Finish

View Renewal/Periodic Extended Columns View Question Rating Distribution View Weighted Scores

Proj/Contract/Agreement/WA Legend: Proj Nbr: = Project Number FC Nbr: = Fixed Contract Number OE Nbr: = Open End Contract Number WA Nbr: = Work Authorization Number

Scores Highlighted In Orange Contain Answers Rated 1 and/or 2 Export To Excel

Final/Complete/Renewal Vendor Performance Evaluations - Past 5 Years

Proj/Contract/Agreement/WA	Overseeing Div	Evaluation Type	Apprvd Dt	Future	Score		
OE Nbr: C1347414B1 - WA Nbr: PO# AVC1800042	AVIATION - CAPITAL IMPROVEMENT PROJECTS	Completed Construction Evaluation	1/15/2019	YES	4.33	View	Docs (0)
OE Nbr: C1347414B1 - WA Nbr: PO# AVE1800011	AVIATION - AIRPORT EXPANSION PROGRAM	Completed Construction Evaluation	8/15/2018	YES	4.00	View	Docs (0)
OE Nbr: C1347414B1	HIGHWAY & BRIDGE MAINTENANCE	Renewal Construction Evaluation	5/19/2017	YES	3.26	View	Docs (0)
OE Nbr: C1347414B1	HIGHWAY & BRIDGE MAINTENANCE	Renewal Construction Evaluation	11/21/2016	YES	3.83	View	Docs (0)
OE Nbr: Q1001001B1 - WA Nbr: DO475 CPD111914-09	PORT EVERGLADES - SEAPORT ENGINEERING & CONSTRUCTION DIVISION	Completed Construction Evaluation	8/30/2016	YES	4.00	View	Docs (0)
OE Nbr: C1347414B1	HIGHWAY & BRIDGE MAINTENANCE	Renewal Construction Evaluation	7/6/2016	YES	4.00	View	Docs (0)
OE Nbr: Q1001001B1 - WA Nbr: DO CPD020915-16	PORT EVERGLADES - SEAPORT ENGINEERING & CONSTRUCTION DIVISION	Completed Construction Evaluation	12/18/2015	YES	4.00	View	Docs (0)
OE Nbr: Q1001001B1	HIGHWAY & BRIDGE MAINTENANCE	Completed Construction Evaluation	9/11/2015	YES	3.83	View	Docs (0)
OE Nbr: Q1001001B1	HIGHWAY & BRIDGE MAINTENANCE	Completed Construction Evaluation	2/3/2015	YES	3.91	View	Docs (0)
OE Nbr: Q1001001B1	HIGHWAY & BRIDGE MAINTENANCE	Completed Construction Evaluation	1/23/2015	YES	3.96	View	Docs (0)
OE Nbr: M0864903B1 - WA Nbr: SH052114-194	HIGHWAY & BRIDGE MAINTENANCE	Completed Construction Evaluation	8/16/2014	YES	4.00	View	Docs (0)
OE Nbr: M0864903B1	HIGHWAY & BRIDGE MAINTENANCE	Completed Construction Evaluation	7/29/2014	YES	3.94	View	Docs (0)
OE Nbr: Q1001001B1	HIGHWAY & BRIDGE MAINTENANCE	Renewal Construction Evaluation	6/6/2014	YES	3.93	View	Docs (0)
OE Nbr: M0864903B1 - WA Nbr: SH022714-132	HIGHWAY & BRIDGE MAINTENANCE	Completed Construction Evaluation	5/31/2014	YES	4.00	View	Docs (0)
OE Nbr: Q1001001B1 - WA Nbr: SH012214-102	HIGHWAY & BRIDGE MAINTENANCE	Completed Construction Evaluation	5/4/2014	Conditional	3.79	View	Docs (0)
OE Nbr: Q1001001B1 - WA Nbr: DO475CPD021214-15	PORT EVERGLADES - SEAPORT ENGINEERING & CONSTRUCTION DIVISION	Completed Construction Evaluation	4/16/2014	YES	4.00	View	Docs (0)
OE Nbr: Q1001001B1 - WA Nbr: DO475CPD010714-12	PORT EVERGLADES - SEAPORT ENGINEERING & CONSTRUCTION DIVISION	Completed Construction Evaluation	3/12/2014	YES	4.00	View	Docs (0)

Calvin, Giordano & Associates, Inc.
EXCEPTIONAL SOLUTIONS™

July 18, 2018

Mr. Horacio Danovich
CIP Engineer
City of Pompano Beach
100 West Atlantic Boulevard, Room 276
Pompano Beach, FL 33060

RE: NW 27th Avenue and MLK Boulevard Intersection Improvements
CGA Proposal No. 18-1353

Dear Mr. Danovich,

Calvin, Giordano & Associates, Inc. is pleased to submit this proposal for professional traffic engineering services related to the design modifications to the intersection of MLK Boulevard and NW 27th Avenue in Pompano Beach. The specific engineering services offered herein are outlined below.

I. Professional Engineering Services

A. Traffic Engineering

1. CGA will provide professional traffic engineering design services related to the modifications to the roadway, signing and pavement markings required for the intersection of MLK Boulevard and NW 27th Avenue. CGA will provide the following scope of services:

   - CGA traffic engineers will provide Roadway Plans and Pavement Marking and Signage Plans in accordance with Broward County Traffic Engineering Design Standards, FDOT Roadway Design Standards, FDOT Standard Modifications for Road and Bridge Construction and the Manual of Uniform Traffic Control Devices to accommodate the proposed above ground traffic signal infrastructure at the intersection of MLK Boulevard and NW 27th Avenue. Plans will incorporate minor roadway modifications to remove existing pavement markings within the intersection, new stop bars, crosswalks, painted median noses and removal of existing signage. The design limits will extend approximately 100 LF east and west on MLK Blvd. and 100 LF on NW 27th Avenue north and south of MLK Blvd.

Building Code Services
Civil Engineering / Roadway & Highway Design
Coastal Engineering
Code Enforcement
Construction Engineering & Inspection (CEI)
Construction Services
Data Technologies & Development
Electrical Engineering
Engineering
Environmental Services
Facilities Management
Geographic Information Systems (GIS)
Governmental Services
Indoor Air Quality
Landscape Architecture
Planning
Project Management
Redevelopment & Urban Design
Surveying & Mapping
Traffic Engineering
Transportation Planning
Water / Utilities Engineering
Website Development

1800 Eller Drive
Suite 600
Fort Lauderdale, FL
33316
954.921.7781 phone
954.921.8807 fax

www.cgasolutions.com

- CGA traffic engineers will coordinate with regulatory agencies including Broward County Traffic Engineering Division to secure plans approvals and permits for construction. This scope of services includes a maximum of two meetings with the City and/or permit agencies. Any agency fees associated with the permits are the responsibility of the Client and are excluded from this proposal.

- CGA Traffic Engineers will obtain elevations of the existing overhead utility lines at the intersection to determine the vertical mast arm clearances requirements.

- Note: This scope of services does not include Structural Design Services related to upgrades to the previously installed mast arm foundations due to new wind load requirements. This scope of services does not include the preparation of Maintenance of Traffic Plans.

- Note: This scope of services does not include Structural Design Services related to changes in wind load requirements, and/or preparation of Maintenance of Traffic Plans.

- Note: CGA traffic engineers will utilize the as-built survey dated 06/27/18 provided by the City of Pompano Beach as a base drawing for the design plans produced as part of this scope of services. The mast arm clearance calculations will be based on the topographic survey elevations of the MLK Blvd. intersection provided as part of this topo survey.

II. Professional CEI Services

A. Assistance during bidding process-Not Included.

B. Project Management Duties

1. Acts as the main point of contact with the City and the County.

2. Certify the job was constructed in accordance to the plans and specifications to the City.

3. Manages the CEI team on daily basis to ensure the completion of the project within time and budget.

4. Attends meetings on behalf of the City.

5. Reviews plans revisions and signs and seals construction generated revisions.

6. Coordinate and conduct close-out inspections with City, Contractor, EOR and permitting agencies; prepare and distribute punch-list(s).

C. Construction Administration and Inspection Services (pre-construction and during construction)

1. Prepare and set up project filing system.

2. Review and accept all required pre-construction documents including baseline schedule, QC plans, MOT certifications, etc.

3. Attend and conduct pre-activity meetings for major activities like concrete, ADA, asphalt and sign installation.

4. Attend and participate in one (1) pre-construction meeting at Municipality location; record/prepare/distribute meeting minutes.

5. Schedule, attend and conduct construction progress meetings on bi-weekly basis at Municipality location for the duration of the construction project prepare and distribute meeting minutes.

6. Receive and coordinate through the EOR, interpretations and clarifications of the Contract Documents (RFI responses, plan revisions, and Work (Change) Directives prepared by the EOR). In connection therewith, assist in the review and processing of any work change directives or change orders.

7. Receive, and coordinate the review and processing of shop drawings, samples and other data which the Contractor is required to submit.

8. Perform CEI Services including field observations for compliance with plans and specifications; provide copies of observation reports to the EOR and City on a weekly basis. Make interim inspections for substantial and final completion(s) to determine, in general, if the work has been completed in conformance with the intent of the Contract Documents.

9. Review, coordinate required revisions, and approve and payment application requests; processing of applications by City.

10. Attend and participate in meetings with the City, Contractor, Engineer and appropriate regulatory agencies when requested by the City and necessary for consultation and conferences in regard to construction of the project.

11. Receive, review and process Contractor's construction schedule(s), and schedule of values.

12. Ensure QC materials testing is performed by the contractor.

13. Perform materials sampling and verification testing as needed.

D. Post Construction Services

1. Ensure the submittal and performing a review of the as-built drawings for the project.

2. Assist the PA coordinate with the County for the final signalization/pavement markings/signage inspection and certification.

3. Review all punch list items generated during the 100% inspection and ensure that all items are closed out prior to final acceptance.

4. Obtain all close out documents required by the City's contract with the contractor. Review all documents for accuracy.

5. Provide the city with an electronic folder with all project documents.

6. Ensure warranty letters are provided and included in the project's close out package.

7. Review all materials test results and prepare a final materials certification letter for the City's review and signature.

8. Perform reviews of as-builts supplied by the Contractor. Assist in obtaining information from the Contractor to process close-out packages. Prepare and submit permit close-out documents and certification(s).

BASIS OF PROPOSAL

- Any opinion of the construction cost prepared by Calvin, Giordano & Associates, Inc. represents its judgment as a design professional and is supplied for the general guidance of the CLIENT since Calvin, Giordano & Associates, Inc. has no control over the cost of labor and material, or over competitive bidding or market conditions. Calvin, Giordano & Associates, Inc. does not guarantee the accuracy of such opinions as compared to contractor bids or actual cost to the CLIENT.
- Any outside engineering services, studies, or laboratory testing not specifically mentioned in the Scope of Services will be the responsibility of the CLIENT. All municipal, permit, and agency fees as well as Title Certificates will be paid by the CLIENT.

- Basic services outlined within this proposal shall be considered complete when the project plans are submitted to the regulatory agencies for Certification.
- Calvin, Giordano & Associates, Inc. is performing the consultant services set forth in this Agreement strictly as a professional consultant to CLIENT. Nothing contained in this Agreement shall create any contractual relationship between Calvin, Giordano & Associates, Inc. and any contractor or subcontractor performing construction activities on the project, or any of CLIENT's other professional consultants.
- Calvin, Giordano & Associates, Inc. shall not be responsible for the contractor's schedules or failure to carry out the construction in accordance with the construction documents. Calvin, Giordano & Associates, Inc. shall not have control over or charge of acts or omissions of the contractor, subcontractors, or their agents or employees, or of any other persons performing portions of the construction.
- Calvin, Giordano & Associates, Inc. will require that all consultants carry proper insurance, including professional liability insurance, if appropriate.
- Permit construction certification will include one partial and one final inspection.

ADDITIONAL FEES

The following services are NOT included in this proposal and will be considered Additional Services, which will be addressed in a separate contractual agreement. The services include but are not limited to:

- Architectural, structural (i.e., retaining walls, bridges, docks), mechanical (i.e., fire pumps), fire protection, geotechnical and testing, environmental assessment, power, gas, telephone, cable television, site lighting services.
- Calculations for needed fire flow for site demands, based on building type use and size, if required.
- Calculations of off-site flood stages.
- Construction quality control inspections.
- Off-site engineering and negotiations for off-site easements, if required (other than as specified in the Scope of Services).
- Permit application or negotiation with permitting authorities other than those specifically listed herein.
- Preparation of construction contract documents, other than drawings and technical specifications (e.g., bid schedule, project manual);
- Professional land surveying not included in the scope of services (i.e., buried utility investigation, easement research, condominium documents, project stake-out and as-built drawings).
- Professional services required due to conditions different from those itemized under the Scope of Services or due to events beyond the control of Calvin, Giordano & Associates, Inc.

- Professional services required, due to changes in the site plan initiated by the CLIENT, their representatives or other consultants (e.g., architects, landscape architects, etc.) after either design or preparation of the construction drawings has commenced.
- Re-review of rejected shop drawings.
- Review and approval of Contractor pay requests.
- Review of Data supplied by the CLIENT (i.e. GIS data sets, databases, aerial images, etc.) required for integration into this project.
- Review of shop drawings for contractor or Client selected alternatives, materials, products, etc.
- Special shop drawing annotation and modification to expedite shop drawing approval process.
- Updated boundary survey, site evaluation or closing assistance work, unless specified above.

REIMBURSABLE EXPENSES

Calvin, Giordano & Associates, Inc. and its consultants will be reimbursed for the printing of drawings and specifications, deliveries, Federal Express services, required travel time and travel expenses, long distance telephone calls, fax transmittals, postage, fees paid for securing approval of authorities having jurisdiction over the project, renderings, models and mock-ups required by CLIENT, as required. Reimbursable expenses and sub-consultant invoices will be billed directly to the CLIENT at a multiplier of 1.25.

MEETING ATTENDANCE

Due to the difficulties of predicting the number or duration of meetings, no meetings other than those listed above, are included in the Schedule of Fees shown below. Preparation for and meeting attendance, as necessary, will be provided on a time and materials basis and will be billed at the standard hourly rates in accordance with the attached Hourly Rate Schedule.

SCHEDULE OF FEES

Calvin, Giordano & Associates, Inc. will perform the Scope of Services for a lump sum fee as shown in the proposed Schedule of Fees:

PROPOSED SCHEDULE OF FEES		
I	**Professional Engineering Services**	
	A Professional Traffic Engineering Services	**$28,600.00**
	Signal Design	$28,600.00
II	**Professional CEI Services**	**$28,600.00**
	Project Administration	$28,600.00
III	**Meetings not included in I thru II**	**Hourly**
	TOTAL Lump Sum (Plus Hourly Services)	**$57,200.00**

TERMS OF THE AGREEMENT

- Calvin, Giordano & Associates, Inc. is preparing and providing drawings, plans, specifications and other documents as outlined in the scope of services for this Agreement for use in the construction of this project, based upon design and construction criteria prepared and provided by others, including but not limited to the CLIENT and CLIENT's consultants. Calvin, Giordano & Associates, Inc. is not responsible for any errors and omissions in the aforesaid design and construction criteria provided by others.
- CLIENT agrees to indemnify, hold harmless and, at Calvin, Giordano & Associates, Inc.'s option, defend or pay for an attorney selected by Calvin, Giordano & Associates, Inc., to defend Calvin, Giordano & Associates, Inc., its officers, agents, servants, and employees against any and all claims, losses, liabilities, and expenditures of any kind, including attorney fees, any appellate attorney costs, court costs, and expenses, caused by, arising from, or related to any acts, omissions or negligence of CLIENT or its consultants.
- CLIENT agrees to limit Calvin, Giordano, & Associates, Inc.'s liability for any and all claims that CLIENT may assert on its own behalf or on behalf of another, including but not limited to claims for breach of contract or breach of warranty, to the amount of fees paid to Calvin, Giordano & Associates, Inc., pursuant to this Agreement.
- Drawings, specifications, and other documents and electronic data furnished by Calvin, Giordano & Associates, Inc. in connection with this project are instruments of service. All original instruments of service shall be retained by Calvin, Giordano & Associates, Inc. and will remain their property, with all common law, statutory and other reserved rights, including copyright, in those instruments. This information provided in the instruments of service is proprietary and will not be shared with others without prior written consent. The CLIENT may request reproducible copies, and all original documents upon payment of all outstanding invoices, and expenses.

- Invoices for work accomplished to date will be submitted monthly and are payable within thirty (30) days. The CLIENT will pay invoices upon receipt and understands interest charges of 1.5% per month will be applied to any unpaid balance past thirty (30) days. Calvin, Giordano & Associates, Inc. may elect to stop work until payment is received. If work is stopped for thirty (30) days or more, Calvin, Giordano & Associates, Inc. may request compensation for start-up costs when work resumes.
- PURSUANT TO SECTION 558.0035, FLORIDA STATUTES, AN INDIVIDUAL EMPLOYEE OR AGENT OF CALVIN, GIORDANO & ASSOCIATES, INC. MAY NOT BE HELD INDIVIDUALLY LIABLE IN NEGLIGENCE FOR ANY CLAIMS, DAMAGES, LOSSES, OR DISPUTES ARISING OUT OF OR SUBJECT TO THE CONTRACT.
- The CLIENT or their representative shall be available to meet with Calvin, Giordano & Associates, Inc. and provide decisions in a timely manner throughout the course of the project. The CLIENT will provide all plans and other pertinent information, which are necessary for Calvin, Giordano & Associates, Inc. to provide complete professional services as outlined in this contract.
- The terms of Agreement shall be valid for the Client's acceptance for a period of thirty (30) days from the date of execution by Calvin, Giordano & Associates, Inc. after which time this contract offer becomes null and void if not accepted formally (evidenced by receipt of an executed copy of this document). All rates and fees quoted in this document shall be effective for a period of six (6) months, after which time they may be renegotiated with the CLIENT.

MISCELLANEOUS PROVISIONS

- CLIENT and Calvin, Giordano & Associates, Inc., respectively, bind themselves, their partners, successors, assigns, and legal representatives to the other party to this Agreement and to the partners, successors, assigns, and legal representatives of such other party with respect to all covenants of this Agreement. Neither CLIENT nor Calvin, Giordano & Associates, Inc. shall assign this Agreement without written consent of the other.
- This Agreement represents the entire and integrated agreement between the CLIENT and Calvin, Giordano & Associates, Inc. and supersedes all prior negotiations, representations or agreements, either written or oral. This Agreement may be amended only by written instrument signed by both Calvin, Giordano & Associates, Inc. and the CLIENT.
- Unless otherwise provided, this Agreement shall be governed by the law of the place where the project is located.

TERMINATION OF THE AGREEMENT

- This Agreement may be terminated by either party upon not less than seven (7) days written notice should the other party fail substantially to perform in accordance with the terms of this Agreement through no fault of the party initiating the termination. Failure of CLIENT to make payments to Calvin, Giordano & Associates, Inc., in accordance with this Agreement, shall be considered substantial nonperformance and cause for termination.
- In the event of termination in accordance with this Agreement or termination not the fault of Calvin, Giordano & Associates, Inc., Calvin, Giordano & Associates, Inc. shall be compensated for services properly performed prior to receipt of notice of termination, together with Reimbursable Expenses then due.

We appreciate the opportunity to submit this proposal. Calvin, Giordano & Associates, Inc. is prepared with the necessary manpower to proceed with the proposed scope of services upon receipt of the executed authorization. Our personnel are committed to completing the project in a timely manner. Please indicate your acceptance of this proposal by signing below and returning one executed copy of the contract to this office. We look forward to working with you in making this project a success.

Sincerely,

CALVIN, GIORDANO & ASSOCIATES, INC.

Dennis J. Giordano
President

Cost of these services are $57,200.00 plus hourly as noted in fee breakdown.

ACCEPTANCE OF CONTRACT

CALVIN, GIORDANO & ASSOCIATES, INC.

By: _____ Date: 7/18/18

Name: Dennis J. Giordano
Title: President

By: _____ Date: _____

Name: Mr. Horacio Danovich
Title: CIP Engineer

Bid Guaranty, Performance and Payment Guaranties, and Qualifications of Surety Requirements:

A. **Bid Guaranty**: All solicitation submittals shall be accompanied by a bid bond executed by a surety company meeting the Qualifications of Surety Requirements. Failure to submit a bid guaranty by solicitation due date and time, and in accordance with instructions will deem Vendor non-responsive.

1. In lieu of the bid bond, the following will be acceptable: cash, money order, certified check, cashier's check, an original **Bid Guaranty – Unconditional Letter of Credit**, treasurer's check or bank draft of any national or state bank (United States). A personal check or a company check of a Vendor is not a valid bid guaranty.

2. The bid guaranty shall be in an amount equal to five percent (5%) of the total price offered, payable to the Board of County Commissioners and conditioned upon the successful Vendor providing the Performance and Payment Guaranty, evidence of insurance, or any other requirements set forth within the solicitation, within 15 calendar days after notification of award of the contract.

3. Guaranty of the successful Vendor shall be forfeited to the Board of County Commissioners not as a penalty, but as liquidated damages for the cost and expense incurred should said Vendor fail to provide the required Performance and Payment Guaranty or Certificate of Insurance or fail to comply with any other requirements set forth in the solicitation. Upon request, bid guaranties of unsuccessful vendors will be returned after award of contract or expiration of bid validity.

4. Vendors must either submit an electronic bid bond through BidSync or submit an original bid guaranty to the Purchasing Division, by solicitation due date and time, or Vendor may be deemed non-responsive.

    a. To submit an electronic bid bond, Vendor must submit through BidSync, using Surety 2000. The Vendor should copy and paste the information from Bid Sync and provide to the bonding agent; the bonding agent should copy and paste information provided by Vendor into the Surety 2000 system to reduce errors. An original bid bond will not be required when the bid bond is submitted electronically through Surety 2000. Note – Vendors, bonding agents, and surety companies must be registered with Surety 2000 to use the service; contact Surety 2000 to find out information regarding their service. Broward County's vendor identification number for Surety 2000 is P06145037.

    b. To submit an original bid guaranty, in lieu of submitting an electronic bid bond through BidSync, Vendor must submit an original bid guaranty in a sealed envelope, with the solicitation number, solicitation title, date and the time of bid opening, and address listed on the envelope. A copy of the bid guaranty should also be uploaded into Bid Sync; this does not replace the requirement to have an original bid guaranty. Vendors must submit the original bid guaranty, by the solicitation due date and time, to:

        Broward County Purchasing Division
        115 South Andrews Avenue, Room 212
        Fort Lauderdale, FL 33301

B. **Performance and Payment Guaranties**: within 15 calendar days of being notified of the award of contract, Vendor shall furnish the referenced Performance Bond and a Payment Bond containing all the provisions of the **Performance Bond Form** and **Payment Bond Form**.

1. The bonds shall be in the amount of fifty percent (50%) of the contract amount guaranteeing to County the completion and performance of the work covered in such Contract as well as full payment of all suppliers, material men, laborers, or subcontractors employed pursuant to this project. Such bond(s) shall be with a surety company which is qualified pursuant to the section, Qualifications of Surety.

2. Each bond shall continue in effect for one year after completion and acceptance of the work with liability equal to one hundred percent (100%) of the Contract price, or an additional bond shall be conditioned that the Vendor will upon notification by the County, correct any defective or faulty work or materials which appear within one year after completion of the Contract.

3. Pursuant to the requirements of Section 255.05(1), Florida Statutes, Vendor shall ensure that the bonds referenced above shall be recorded in the public records of Broward County and provide County with evidence of such recording.

4. In lieu of the performance and payment bond, Vendor may furnish an alternate form of security which may be in the form of cash, money order, certified check, cashier's check or an original **Irrevocable Letter of Credit.** Such alternate forms of security shall be for the same purpose and shall be subject to the same conditions as those applicable above and shall be held by the County for one year after completion and acceptance of the work.

5. The Vendor is required at all times to have valid Performance and Payment Guaranties (or other approved security) in force covering the work being performed.

6. The Vendor agrees to keep such Guaranties (or other security) in effect for the duration of the contract. If the contract is extended or renewed, it shall be subject to the same bonding (or other approved security) requirements.

C. **Qualifications of Surety Requirements**: A bid bond performance bond, and payment bond must be executed by a surety company of recognized standing, authorized to do business in the State of Florida, having a resident agent in the State of Florida, and having been in business with a record of successful continuous operation for at least five years.

1. In addition to the above-minimum qualifications, the surety company must meet at least one of the following additional qualifications:

   a. The surety company shall hold a current Certificate of Authority as acceptable surety on federal bonds in accordance with the United States Department of Treasury Circular 570, current revision. If the amount of the Bond exceeds the underwriting limitation set forth in the circular, in order to qualify, the net retention of the surety company shall not exceed the underwriting limitation in the circular and the excess risks must be protected by coinsurance, reinsurance, or other methods in accordance with Treasury Circular 297, Revised (31 DFR Section 223.10 Section 223.11). Further, the surety company shall provide the County with evidence satisfactory to the County, that such excess risk has been protected in an acceptable manner.

b. For bonds up to $2 million, the surety company shall hold a current Certificate of Authority with the Florida Office of Insurance Regulation.

c. The surety company shall have at least the following minimum ratings:

Amount of Bond			Surety Ratings	Financial Size Category
$500,001	to	$1,000,000	A, A-	Class I
$1,000,001	to	$2,000,000	A, A-	Class II
$2,000,001	to	$5,000,000	A	Class III
$5,000,001	to	$10,000,000	A	Class IV
$10,000,001	to	$25,000,000	A	Class V
$25,000,001	to	$50,000,000	A	Class VI
$50,000,001	to	or more	A	Class VII

2. For projects which do not exceed $500,000, the County shall accept a Bid Bond and Performance and Payment Bond from a surety company which has twice the minimum surplus and capital required by the Florida Office of Insurance Regulation at the time the solicitation is issued, if the surety company is otherwise in compliance with the provisions of the Florida Insurance Code, and if the surety company holds a currently valid Certificate of Authority issued by the United States Department of the Treasury under Section 9304 to 9308 of Title 31 of the United States Code.

3. If the surety company fails to meet the minimum standards, a bond from a surety that meets the minimum standards must be provided to satisfy the bonding requirements.

CITY OF POMPANO BEACH

P.O. DRAWER 1300
ATTN: ACCOUNTS PAYABLE
POMPANO BEACH, FL 33061

AN EQUAL OPPORTUNITY EMPLOYER

PURCHASE ORDER NO. 163270
Type: P

DATE: 8/24/2016

9564 (954) 9217781
TO: CALVIN, GIORDANO & ASSOCIATES
SUITE 600
1800 ELLER DRIVE
FT LAUDERDALE, FL 33316

SHIP TO: COMMUNITY REDEVELOPMENT
COMMUNITY REDEVELOPMENT
786-5535/CITY HALL/RM 276
100 W ATLANTIC BLVD
POMPANO BEACH, FL 33060

Our P.O. # MUST Appear on ALL Invoices, Packages and Correspondence

DELIVER BY	REQUISITION #	REQUISITION DATE	TERMS	CONFIRMED BY
09/30/2016	2016004726	08/23/2016	NET	H DANOVICH
FOB	**CONTRACT#**	**ACCOUNT NUMBER**	**PROJECT#**	**AUTHORIZED BY**
DESTINATION		15074195396503	11141	CASSANDRA LEMASURIER

ITEM #	QUANTITY/ UNIT	DESCRIPTION ARTICLE OR SERVICE	UNIT COST	EXTENDED COST
1	90,000.00 / DL	925 093 ENGINEERING SVCS, PROFESS TRAFFIC & TRANSPORTATION TRAFFIC SIGNAL DESIGN SERVICES FOR MLK BLVD & NW 27TH AVE PER RESO 2016-53 AND WORK AUTH. NO. 1	1.0000	90,000.00

TOTAL PURCHASE AMOUNT **$90,000.00**

Authorized Signature:

CITY OF POMPANO BEACH

P.O. DRAWER 1300
ATTN: ACCOUNTS PAYABLE
POMPANO BEACH, FL 33061

PURCHASE ORDER NO. 163270
Type: P

AN EQUAL OPPORTUNITY EMPLOYER

DATE: 8/24/2016

9564 (954) 9217781

TO: CALVIN, GIORDANO & ASSOCIATES
SUITE 600
1800 ELLER DRIVE
FT LAUDERDALE, FL 33316

SHIP TO: COMMUNITY REDEVELOPMENT
COMMUNITY REDEVELOPMENT
786-5535/CITY HALL/RM 276
100 W ATLANTIC BLVD
POMPANO BEACH, FL 33060

Our P.O. # MUST Appear on ALL Invoices, Packages and Correspondence

DELIVER BY	REQUISITION #	REQUISITION DATE	TERMS	CONFIRMED BY
09/30/2016	2016004726	08/23/2016	NET	H DANOVICH
FOB	**CONTRACT#**	**ACCOUNT NUMBER**	**PROJECT#**	**AUTHORIZED BY**
DESTINATION		15074195396503	11141	CASSANDRA LEMASURIER

ITEM #	QUANTITY/ UNIT	DESCRIPTION ARTICLE OR SERVICE	UNIT COST	EXTENDED COST

IMPORTANT INFORMATION FOR VENDORS

1. PURCHASE ORDER # MUST APPEAR ON ALL INVOICES, SHIPPING NOTICIES & PACKAGES.
2. INCLUDE PACKING LIST WITH EACH SHIPMENT.
3. IMMEDIATELY UPON SHIPMENT SEND INVOICE IN DUPLICATE TO: ACCOUNTS PAYABLE/P.O. DRAWER 1300/ POMPANO BEACH, FL 33061.
4. NO C.O.D SHIPMENTS ACCEPTED
5. "IF ITEM(S) PURCHASED ARE CLASSIFIED AS TOXIC OR HAZARDOUS SUBSTANCES UNDER CHAPTER 442 FLORIDA STATUTES, VENDOR MUST SUBMIT COPIES OF MATERIAL SAFETY DATA SHEET (MSDS) FOR EACH SUBSTANCE TO DELIVERY LOCATION AT THE TIME OF SHIPMENT. PRODUCTS MUST BE IDENTIFIED AND LABELED IN ACCORDANCE WITH OSHA STANDARDS. FAILURE TO COMPLY WITH THESE REQUIREMENTS WILL RESULT IN DELAY OF PAYMENT UNTIL COMPLIANCE IS EFFECTED."

TERMS AND CONDITIONS

1. **Quality:** The quality of the item(s) delivered shall be equal or better than the item(s) listed herein as approved by the City. Substitutes of lesser quality must be approved in writing, in advance by the Purchasing Agent, City of Pompano Beach, prior to shipment.
2. If prices are higher than specified, do not ship without Purchasing Agent's prior approval in writing.
3. Send separate invoice for each shipment.

PAYMENT TERMS

PAYMENT OF THIS PURCHASE ORDER WILL BE MADE WITHIN 45 DAYS AFTER RECEIPT OF MERCHANDISE, UNLESS PAYMENT DISCOUNT IS OFFERED. WHERE SUCH TERM DISCOUNT IS ALLOWED, THE CITY RESERVES THE RIGHT TO DEDUCT THE DISCOUNT WITHIN THE STATED TIME LIMIT BEGINNING AFTER RECEIPT OF MERCHANDISE. DISCOUNT TERMS, IF ANY, ARE TO BE STATED ON VENDOR INVOICE.

4. Delivery will be accepted at Vendor's risk. Goods are subject to inspection and return to vendor at vendor's expense if found unsatisfactory.
5. All credit adjustments must be made by check or credit memo directly to the Finance Department.
6. The City is exempt from the payment of all Federal excise taxes and sales taxes of the State of Florida, and generally all other State Governments. Seller shall furnish proper exemption certificate.
7. Correspondence in reference to this order must be addressed to the Purchasing Agent, City of Pompano Beach, Florida.
8. Vendor, by accepting this order, assumes complete responsibility for any alleged patent infringements, and will hold the City harmless from all suits and payments.
9. The City assumes no responsibility for purchases exceeding $ 25.00 which are not covered by a purchase order number or approved by the Purchasing Agent or Buyer, in writing.
10. The nondiscrimination clause contained in Section 202, Executive Order 11246, as amended by Executive Order 11375, relative to Equal Opportunity for all persons without regard to race, color, religion, sex or national origin, and the implementing rules and regulations prescribed by the Secretary of Labor, are incorporated herein.
11. **RETENTION OF RECORDS & RIGHT TO ACCESS CLAUSE:**
    The vendor shall preserve and make available all financial records, supporting documents, statistical records, and any other documents pertinent to this contract for a period of (3) years, the records shall be retained until resolution of the audit finding.
12. **If the above conditions are not acceptable, please advise the City on receipt of the order and prior to making delivery.**

Send Original and One Copy of Invoice to:
CITY OF POMPANO BEACH
ACCOUNTS PAYABLE
P.O. DRAWER 1300
POMPANO BEACH, FL 33061

F.O.B. POMPANO BEACH, FL
F.E.I. 59-6000411
U.S. Treasury Department
I.R.S. Registration No. 59-74-0083K
State Sales Tax Exemption
Certificate no. 85-8012621672C-6

Authorized Signature:

DOMESTIC PARTNERSHIP REQUIREMENTS CERTIFICATION FORM

The completed and signed form should be returned with the Vendor's submittal. If not provided with submittal, the Vendor must submit within three business days of County's request. Vendor may be deemed non-responsive for failure to fully comply within stated timeframes.

The Domestic Partnership Act, Section 16 ½ -157, Broward County Code of Ordinances, as amended, requires all Vendors contracting with the County, in an amount over $100,000 provide benefits to Domestic Partners of its employees, on the same basis as it provides benefits to employees spouses, with certain exceptions as provided by the Ordinance.

For all submittals over $100,000.00, the Vendor, by virtue of the signature below, certifies that it is aware of the requirements of Broward County's Domestic Partnership Act, Section 16-½ -157, Broward County Code of Ordinances, as amended; and certifies the following: **(check only one below)**.

☐ 1. The Vendor currently complies with the requirements of the County's Domestic Partnership Act and provides benefits to Domestic Partners of its employees on the same basis as it provides benefits to employees' spouses.

☐ 2. The Vendor will comply with the requirements of the County's Domestic Partnership Act at time of contract award and provide benefits to Domestic Partners of its employees on the same basis as it provides benefits to employees' spouses.

☐ 3. The Vendor will not comply with the requirements of the County's Domestic Partnership Act at time of award.

☐ 4. The Vendor does not need to comply with the requirements of the County's Domestic Partnership Act at time of award because the following exception(s) applies: **(check only one below)**.

- ☐ The Vendor employs less than five (5) employees.
- ☐ The Vendor is a governmental entity, not-for-profit corporation, or charitable organization.
- ☐ The Vendor is a religious organization, association, society, or non-profit charitable or educational institution.
- ☐ The Vendor does not provide benefits to employees' spouses.
- ☐ The Vendor provides an employee the cash equivalent of benefits. (Attach an affidavit in compliance with the Act stating the efforts taken to provide such benefits and the amount of the cash equivalent).
- ☐ The Vendor cannot comply with the provisions of the Domestic Partnership Act because it would violate the laws, rules or regulations of federal or state law or would violate or be inconsistent with the terms or conditions of a grant or contract with the United States or State of Florida. Indicate the law, statute or regulation (State the law, statute or regulation and attach explanation of its applicability).

AUTHORIZED SIGNATURE/ NAME	TITLE	DATE

DRUG-FREE WORKPLACE REQUIREMENT CERTIFICATION FORM

The completed and signed form should be returned with the Vendor's submittal. If not provided with submittal, the Vendor must submit within three business days of County's request. Vendor may be deemed non-responsive for failure to fully comply within stated timeframes.

Section 21.31.a. of the Broward County Procurement Code requires awards of all competitive solicitations requiring Board Award be made only to firms certifying the establishment of a drug free workplace.

The undersigned vendor hereby certifies that it will provide a drug-free workplace program by:

(1) Publishing a statement notifying its employees that the unlawful manufacture, distribution, dispensing, possession, or use of a controlled substance is prohibited in the offeror's workplace, and specifying the actions that will be taken against employees for violations of such prohibition;

(2) Establishing a continuing drug-free awareness program to inform its employees about:

i. The dangers of drug abuse in the workplace;

ii. The offeror's policy of maintaining a drug-free workplace;

iii. Any available drug counseling, rehabilitation, and employee assistance programs; and

iv. The penalties that may be imposed upon employees for drug abuse violations occurring in the workplace;

(3) Giving all employees engaged in performance of the contract a copy of the statement required by subparagraph (1);

(4) Notifying all employees, in writing, of the statement required by subparagraph (1), that as a condition of employment on a covered contract, the employee shall:

i. Abide by the terms of the statement; and

ii. Notify the employer in writing of the employee's conviction of, or plea of guilty or nolo contendere to, any violation of Chapter 893 or of any controlled substance law of the United States or of any state, for a violation occurring in the workplace NO later than five days after such conviction.

(5) Notifying Broward County government in writing within 10 calendar days after receiving notice under subdivision (4) (ii) above, from an employee or otherwise receiving actual notice of such conviction. The notice shall include the position title of the employee;

(6) Within 30 calendar days after receiving notice under subparagraph (4) of a conviction, taking one of the following actions with respect to an employee who is convicted of a drug abuse violation occurring in the workplace:

i. Taking appropriate personnel action against such employee, up to and including termination; or

ii. Requiring such employee to participate satisfactorily in a drug abuse assistance or rehabilitation program approved for such purposes by a federal, state, or local health, law enforcement, or other appropriate agency; and

(7) Making a good faith effort to maintain a drug-free workplace program through implementation of subparagraphs (1) through (6).

AUTHORIZED SIGNATURE/ NAME	**TITLE**	**DATE**

GENERAL CONDITIONS
Quotation Requests and Invitations for Bids

These are standard instructions for Quotation Requests and Invitations for Bid as issued by the Broward County Board of County Commissioners (County). The County may delete, supersede, or modify any of these standard instructions for a particular contract by indicating such change in the Special Instructions to Vendors or in the line item. By acceptance of a purchase order or award notification issued by the County, Vendor agrees that the provisions included within this solicitation, which upon award serves as the executed contract, shall prevail over any conflicting provision within any standard form contract of the Vendor regardless of any language in Vendor's contract to the contrary. Digital versions of this solicitation are provided for the convenience of the Vendor. Any material modification of the solicitation and/or any alteration of the verbiage is expressly prohibited and is not enforceable. Any alteration may render the Vendor's submission void and bar the Vendor from consideration in connection with this solicitation.

1. **Execution of Solicitation Response:**

(a) BY SUBMITTING THIS FORM WITH AN ELECTRONIC SIGNATURE, VENDOR ACKNOWLEDGES AND ACCEPTS ALL GENERAL CONDITIONS AND SPECIAL INSTRUCTIONS. The individual submitting is authorized to sign (electronically accept) this solicitation response on behalf of the Vendor as indicated in Certificate as to Corporate Principal, designation letter by Director/Corporate Officer, or other business authorization to bind on behalf of the Vendor. Solicitation response must contain a signature of an individual authorized to bind the Vendor. Electronic signatures or digital signatures shall have the same effect as an original signature.

(b) I certify that the Vendor's response is made without prior understanding, agreement, or connection with any corporation, firm or person submitting a response for the same items/services, and is in all respects fair and without collusion or fraud. I also certify that the Vendor agrees to abide by all terms and conditions of this solicitation, acknowledge and accept all of the solicitation pages as well as any special instructions sheet(s).

(c) No award will be made to a Vendor who is delinquent in payment of any taxes, fees, fines, contractual debts, judgments, or any other debts due and owed to the County, or is in default on any contractual or regulatory obligation to the County. By submitting this solicitation response, Vendor attests that it is not delinquent in payment of any such debts due and owed to the County, nor is it in default on any contractual or regulatory obligation to the County. In the event the Vendor's statement is discovered to be false, Vendor will be subject to debarment and the County may terminate any contract it has with Vendor.

(d) Vendor certifies by submitting this solicitation response that no principals or corporate officers of the firm were principals or corporate officers in any other firm which was suspended or debarred from doing business with Broward County within the last three years, unless noted in the response.

(e) By submitting this solicitation response, Vendor attests that any and all statements, oral, written or otherwise, made in support of this response, are accurate, true and correct. Vendor acknowledges that inaccurate, untruthful, or incorrect statements made in support of this response may be used by the County as a basis for rejection, rescission of the award, or termination of the contract and may also serve as the basis for debarment of Vendor pursuant to Section 21.119 of the Broward County Procurement Code.

2. **Withdrawal:**

No Vendor may withdraw its solicitation response before the expiration of 120 days from the date of opening. Any response altering the 120 day requirement shall be deemed non-responsive.

3. **Submission of Bids and Quotations:**

Vendor's solicitation response must be submitted electronically through BidSync, the County's designated electronic bidding system. It is the Vendor's sole responsibility to assure its response is submitted and received through BidSync by the date and time specified in the solicitation. The County will not consider solicitation

responses received by other means. Any timeframe references are in Eastern Standard Time. The official time for electronic submittals is BidSync's servers, as synchronized with the atomic clock. All parties without reservation will accept the official time.

4. **Bid Opening (Invitation for Bids only):**

   All bids received shall be publicly opened in the presence of one or more witnesses at the Purchasing Division office, located at 115 S. Andrews Avenue, Room 212, Fort Lauderdale, FL 33301, or other designated County location as posted in the Purchasing Division offices. The Purchasing Division will decrypt responses received in BidSync immediately following the designated bid end date and time.

5. **Addenda:**

   Broward County reserves the right to amend this solicitation prior to the opening date indicated. Only written addenda are binding. If, upon review, material errors in specifications are found, contact the Purchasing Division immediately, prior to opening date, to allow for review and subsequent clarification on the part of Broward County. Vendors shall be responsible for obtaining, reviewing and acknowledging each addendum.

6. **Prices, Terms, and Payments:**

   Firm prices shall be provided and include all handling, set up, shipping and inside delivery charges to the destination shown herein unless otherwise indicated.

   (a) **The Vendor:** In submitting this solicitation response certifies that the prices provided herein are not higher than the prices at which the same commodity(ies) or service(s) is sold in approximately similar quantities under similar terms and conditions to any purchaser whomsoever.

   (b) **F.O.B.:** Unless otherwise specified, prices shall be provided as F.O.B. Destination, freight included and inclusive of all costs. Current and/or anticipated applicable fuel costs should be considered and included in the prices provided.

   (c) **Ties:** The Purchasing Division will break tie responses in accordance with the Procurement Code.

   (d) **Taxes:** Broward County is exempt from Federal Excise and Florida Sales taxes on direct purchase of tangible property. Exemption numbers appear on purchase order. The Vendor shall pay all applicable sales, consumer, land use, or other similar taxes required by law. The Vendor is responsible for reviewing the pertinent State Statutes involving the sales tax and complying with all requirements.

   (e) **Discounts:** Vendors may offer a cash discount for prompt payment. However, such discounts will not be considered in determining the lowest net cost for evaluation purposes. Vendors should reflect any discounts to be considered in the evaluation in the unit prices submitted.

   (f) **Mistakes:** Vendors are cautioned to examine all specifications, drawings, delivery instructions, unit prices, extensions, and all other special conditions pertaining to this solicitation. Failure of the Vendor to examine all pertinent documents shall not entitle them to any relief from the conditions imposed in the contract. In case of mistakes in extension, the unit price shall govern. Multiplication or addition errors are deemed clerical errors and shall be corrected by the County.

   (g) **Ordering:** The County reserves the right to purchase commodities/services specified herein through contracts established by other governmental agencies or through separate procurement actions due to unique or special needs. If an urgent delivery is required, within a shorter period than the delivery time specified in the contract and if the seller is unable to comply therewith, the County reserves the right to obtain such delivery from others without penalty or prejudice to the County or to the seller.

7. **Open-End Contract:**

   No guarantee is expressed or implied as to the total quantity of commodities/services to be purchased under any open-end contract. Estimated quantities will be used for comparison purposes only. The County reserves the right to issue purchase orders as and when required, or, issue a blanket purchase order for individual agencies and release partial quantities or, issue instructions for use of direct Purchase Orders by various County agencies, or, any combination of the preceding. No delivery shall become due or be acceptable without a written order or shipping instruction by the County, unless otherwise provided in the contract. Such order will contain the quantity, time of delivery and other pertinent data. However, on items urgently required, the seller

may be given telephone notice, to be confirmed by an order in writing.

8. **Contract Period (Open-End Contract):**

The initial contract period shall start and terminate as indicated in the Special Instructions to Vendors. The Vendor will complete delivery and the County will receive delivery on any orders transmitted to the Vendor prior to the expiration date. The Director of Purchasing may renew this contract subject to Vendor acceptance, satisfactory performance, and determination that renewal is in the best interest of the County. The County will provide Notification of Intent to Renew in advance of the contract expiration date. All prices, terms and conditions shall remain firm for the initial period of the contract and for any renewal period unless subject to price adjustment specified as a "special condition" hereto. **In the event scheduled services will end because of contract expiration, the Vendor shall continue the service at the direction of the Director of Purchasing. The extension period shall not extend for more than ninety (90) days beyond the expiration date of the existing contract. The Vendor shall be compensated for the service at the rate in effect when this extension clause is invoked by the County.**

9. **Fixed Contract Quantities:**

Purchase order(s) for full quantities will be issued to successful Vendor(s) after notification of award and receipt of all required documents. Fixed contract quantities up to twenty (20) percent of the originally specified quantities may be ordered prior to the expiration of one (1) year after the date of award, provided the Vendor agrees to furnish such quantities at the same prices, terms and conditions.

10. **Awards:**

If a specific basis of award is not established in the Special Instructions to Vendors, the award shall be to the responsible Vendor with the lowest responsive solicitation response meeting the written specifications. As the best interest of the County may require, the right is reserved to make award(s) by individual commodities/ services, group of commodities/services, all or none or any combination thereof. When a group is specified, all items within the group must be priced.

A Vendor desiring to offer “No Charge” on an item in a group must indicate by placing a $0.00 in the offer field, and enter “No Charge” in the “Notes for Buyer” section in BidSync; otherwise the group will be construed as incomplete and may be rejected. However, if Vendors do not offer all items within a group, the County reserves the right to award on an item by item basis. When a group is indicated for variable quantities and the group shows evidence of unbalanced prices, such solicitation response may be rejected. The Director of Purchasing, or the Board of County Commissioners, whichever is applicable, reserves the right to waive technicalities and irregularities and to reject any or all responses.

11. **Payment:**

Payment for all goods and services, requested by a purchase order, shall be made in a timely manner and in accordance with Local Government Prompt Payment Act, Section 218.70, Florida Statutes, and the Prompt Payment Policy, Section No. 1-51.6, Broward County Code of Ordinances. All applications for payment shall be submitted to the address indicated in the purchase order. The County will pay the Vendor after receipt, acceptance, and proper invoice is received. Invoices must bear the purchase order number.

12. **Termination:**

(a) **Availability of Funds:** If the term of this contract extends beyond a single fiscal year of the County, the continuation of this contract beyond the end of any fiscal year shall be subject to the availability of funds from the County in accordance with Chapter 129, Florida Statutes (Florida Statutes). The Broward County Board of County Commissioners shall be the final authority as to availability of funds and how such available funds are to be allotted and expended. In the event funds for this project/purchase are not made available or otherwise allocated, the County may terminate this contract upon thirty (30) days prior written notice to the Vendor.

(b) **Non Performance:** The Awarding Authority may terminate the contract for cause if the party in breach has not corrected the breach within ten (10) days after written notice from the aggrieved party identifying the breach. Cause for termination shall include, but not be limited to, failure to suitably perform the work, failure

to suitably deliver goods in accordance with the specifications and instructions in this solicitation, failure to continuously perform the work in a manner calculated to meet or accomplish the objectives of the County as set forth in this solicitation, or multiple breach of the provisions of this solicitation notwithstanding whether any such breach was previously waived or cured.

(c) **For Convenience**: The Awarding Authority may terminate the contract for convenience upon no less than thirty (30) days written notice. In the event the contract is terminated for convenience, Vendor shall be paid for any goods properly delivered and services properly performed to the date the contract is terminated; however, upon being notified of County's election to terminate, Vendor shall cease any deliveries, shipment or carriage of goods, and refrain from performing further services or incurring additional expenses under the terms of the contract. In no event will payment be made for lost or future profits. Vendor acknowledges and agrees that is has received good, valuable and sufficient consideration from County, the receipt and adequacy of which are hereby acknowledged for County's right to terminate this contract for convenience.

13. **Conditions and Packaging:**

Unless otherwise stated in the solicitation, or specifically ordered from an accepted price list, deliveries must consist only of new and unused goods and shall be the current standards production model available at the time of the solicitation response. The goods must be suitably packaged for shipment by common carrier. Each container or multiple units or items otherwise packaged shall bear a label, imprint, stencil or other legible markings stating name of manufacturer or supplier, purchase order number and any other markings required by specifications, or other acceptable means of identifying Vendor and purchase order number.

14. **Safety Standards:**

Unless otherwise stipulated in the solicitation, all manufactured items and fabricated assemblies shall comply with applicable requirements of the Occupational Safety and Health Act (OSHA) and any standards thereunder. All sources of energy associated with machinery/equipment purchased shall be capable of being locked-out in accordance with OSHA 29 CFR 1910.147, Hazardous Energy Control. In compliance with OSHA 29 CFR 1910.1200, Hazard Communication Standard, and Chapter 442, Florida Statutes, Occupational Safety and Health, any chemical substance delivered from a contract resulting from this solicitation must be compliant with the Global Harmonized System (GHS) for Hazard Communication accompanied by a Safety Data Sheet (SDS) consisting of 16 sections. A Safety Data Sheet (SDS) shall also be submitted to the Broward County Risk Management Division, 115 South Andrews Avenue, Room 218, Fort Lauderdale, FL 33301-1803.

15. **Non-Conformance to Contract Conditions:**

The County may withhold acceptance of, or reject any items which are found, upon examination, not to meet the specification requirements. Upon written notification (mail, email, or fax) of rejection, items shall be removed within five (5) calendar days by the Vendor at its expense and redelivered at its expense. The County regards rejected goods left longer than thirty (30) days as abandoned and the County has the right to dispose of them as its own property. On foodstuffs and drugs, no written notice of rejection need be given. Upon verbal notice to do so, the Vendor shall immediately remove and replace such rejected merchandise at its expense. Rejection for non-conformance, failure to provide services conforming to specifications, or failure to meet delivery schedules may result in Vendor being found in default.

16. **Inspection, Acceptance and Title:**

Inspection and acceptance will be at delivery destination unless otherwise specified. Title and risk of loss or damage to all items shall be the responsibility of the Vendor until accepted by the County.

17. **Governmental Restrictions:**

In the event any governmental restrictions may be imposed which would necessitate alteration of the material quality, workmanship or performance of the items offered on this solicitation response prior to its delivery, it shall be the responsibility of the successful Vendor to notify the County at once, indicating in its letter the specific regulation which required an alteration. The County reserves the right to accept any such alteration, including any price adjustments occasioned thereby, or to cancel the contract at no further expense to the County.

18. **Legal Requirements:**

Applicable provisions of all Federal, State of Florida, County and local laws, and of all ordinances, rules and

regulations including the Broward County Procurement Code shall govern development, submittal and evaluation of responses received in response hereto and shall govern any and all claims and disputes which may arise between person(s) submitting a response hereto and the County by and through its officers, employees and authorized representative, or any other person natural or otherwise in addition to any resultant agreement. Lack of knowledge by any Vendor shall not constitute a recognizable defense against the legal effect thereof.

19. **Indemnification:**

Vendor shall at all times hereafter indemnify, hold harmless and defend County and all of County's current and former officers, agents, servants, and employees (collectively, "Indemnified Party") from and against any and all causes of action, demands, claims, losses, liabilities and expenditures of any kind, including attorneys' fees, court costs, and expenses (collectively, a "Claim"), raised or asserted by any person or entity not a party to this Contract, which Claim is caused or alleged to be caused, in whole or in part, by any intentional, reckless or negligent act or omission of Vendor, its current or former officers, employees, agents, or servants, arising from, relating to, or in connection with this Contract. In the event any Claim is brought against an Indemnified Party, Vendor shall, upon written notice from County, defend each Indemnified Party against each such Claim by counsel satisfactory to County or, at County's option, pay for an attorney selected by the County Attorney to defend the Indemnified Party. The obligations of this section shall survive the expiration or earlier termination of this Contract. To the extent considered necessary by the Contract Administrator and the County Attorney, any sums due Vendor under this Contract may be retained by County until all of County's claims for indemnification pursuant to this Contract have been settled or otherwise resolved. Any amount withheld shall not be subject to payment of interest by County.

For construction contracts, Vendor shall indemnify and hold harmless County, its officers and employees, from liabilities, damages, losses, and costs, including, but not limited to, reasonable attorneys' fees, to the extent caused by the negligence, recklessness, or intentionally wrongful misconduct of Vendor and persons employed or utilized by Vendor in the performance of this Contract. To the extent considered necessary by Contract Administrator and County Attorney, any sums due Vendor under this Contract may be retained by County until all of County's claims for indemnification pursuant to this Contract have been settled or otherwise resolved, and any amount withheld shall not be subject to payment of interest by County. The indemnifications shall survive the expiration or earlier termination of this Contract.

20. **Notice:**

Written notice provided pursuant to this contract shall be sent by certified United States Mail, postage prepaid, return receipt requested, or by hand-delivery with a request for a written receipt of acknowledgment of delivery, addressed to the party for whom it is intended at the place last specified. The place for giving notice shall remain the same as set forth herein until changed in writing in the manner provided in this section. For the present, the County designates:

Director, Broward County Purchasing Division
115 S. Andrews Avenue, Room 212
Fort Lauderdale, FL 33301-1801

Vendor shall identify in the solicitation response a designated person and address to whom notice shall be sent when required by the contract.

21. **Jurisdiction, Venue, Waiver of Jury Trial:**

The contract shall be interpreted and construed in accordance with and governed by the laws of the state of Florida. Any controversies or legal problems arising out of the contract and any action involving the enforcement or interpretation of any rights hereunder shall be submitted to the jurisdiction of the State courts of the Seventeenth Judicial Circuit of Broward County, Florida, the venue situs, and shall be governed by the laws of the state of Florida. By entering into this contract, Vendor and County hereby expressly waive any rights either party may have to a trial by jury of any civil litigation related to this contract. If any party demands a jury trial in an lawsuit arising out of the contract and fails to withdraw the request after written notice by the other party, the party making the request for jury trial shall be liable for the reasonable attorneys' fees and costs of the party

contesting the request for jury trial.

22. **Patents and Royalties:**

The Vendor, without exception, shall indemnify and save harmless and defend the County, its officers, agents and employees from liability of any nature or kind, including but not limited to attorney's fees, costs and expenses for or on account of any copyrighted, patented or unpatented invention, process, or article manufactured or used in the performance of the contract, including its use by the County. If the Vendor uses any design, device, or materials covered by letters, patent or copyright, it is mutually agreed and understood without exception that the prices shall include all royalties or cost arising from the use of such design, device, or materials in any way involved in the work. This provision shall survive the expiration or earlier termination of the contract.

23. **Assignment, Subcontract:**

Contractor shall not transfer, convey, pledge, subcontract or assign the performance required by this solicitation without the prior written consent of the Director of Purchasing. Any award issued pursuant to this solicitation and the monies which may become due hereunder are not assignable, transferrable, or otherwise disposable except with the prior written consent of the Director of Purchasing.

24. **Qualifications of Vendor:**

The County will only consider solicitation responses from firms normally engaged in providing the types of commodities, services, or construction specified herein. Vendor must have adequate organization, facilities, equipment, and personnel to ensure prompt and efficient service to County. The County reserves the right to inspect the facilities, equipment, personnel and organization or to take any other action necessary to determine ability to perform in accordance with specifications, terms and conditions. The County will determine whether the evidence of ability to perform is satisfactory and reserves the right to reject responses where evidence or evaluation is determined to indicate inability to perform. The County reserves the right to consider a Vendor's history of any and all types of citations and/or violations, including those relating to suspensions, debarments, or environmental regulations in determining responsibility. Vendor should submit with its solicitation response a complete history of all citations and/or violations notices and dispositions thereof. Failure of a Vendor to submit such information may be grounds for termination of any contract awarded to successful Vendor. Vendor shall notify the County immediately of notice of any citations or violations which they may receive after the opening date and during the time of performance under any contract awarded to them.

25. **Affiliated Companies Entities of the Principal(s):**

To ensure the vendor has the capability in all respects to perform fully the contract requirements, and the integrity and reliability which will assure good faith performance of the vendor, all vendors are required to disclose the names and addresses of entities with whom the principal(s) of the proposing vendor have been affiliated for a period of with over the last five (5) years from the solicitation opening deadline for the County's review of contract performance evaluations and the history of County Business Enterprise compliance with the County's Small Business Program, including CBE, DBE and SBE goal attainment requirements for all entities affiliated with the principal(s). Affiliated entities of the principal(s) are those entities related to the vendor by the sharing of stock or other means of control, including but not limited to a subsidiary, parent or sibling entity.

26. **Equal Employment Opportunity:**

No Vendor shall discriminate against any employee or applicant for employment because of race, religion, age, color, sex or national origin, sexual orientation (including but not limited to Broward County Code, Chapter 16½), marital status, political affiliation, disability, or physical or mental handicap if qualified. Vendor shall take affirmative action to ensure that applicants are employed, and that employees are treated during their employment without regard to their race, religion, age, color, sex or national origin, sexual orientation, marital status, political affiliation, disability, or physical or mental handicap. Such actions shall include, but not be limited to the following: employment, upgrading, demotion, or transfer, recruitment or recruitment advertising, layoff or termination, rates of pay or other forms of compensation; and selection of training, including apprenticeship. The Vendor agrees to post in conspicuous places available to employees and applicants for employment, notices setting forth the provisions of this non-discrimination clause.

The Vendor selected to perform work on a County project must include the foregoing or similar language in its

contracts with any subcontractors or sub consultants, except that any project assisted by U.S. Department of Transportation funds shall comply with the non-discrimination requirements in Title 49 C.F.R. Parts 23 and 26. The subcontractors, if any, will be made aware of and will comply with this nondiscrimination clause. Failure to comply with above requirements is a material breach of the contract, and may result in the termination of this contract or such other remedy as the County deems appropriate.

27. **Modifications:**

All changes to purchase orders shall be by issuance of a change order. Any modifications or changes to any contract entered into as a result of this solicitation must be by written amendment with the same formality and of equal dignity prior to the initiation of any such change.

28. **Resolution of Protested Solicitations and Proposed Awards:**

In accordance with Sections 21.118 and 21.120 of the Broward County Procurement Code, if a Vendor intends to protest a solicitation or proposed award of a contract the following apply:

(a) Any protest concerning the solicitation or other solicitation specifications, or requirements must be made and received by the County within seven (7) business days from the posting of the solicitation or addendum on the Purchasing Division's website. Such protest must be made in writing to the Director of Purchasing. Failure to timely protest solicitation specifications or requirements is a waiver of the ability to protest the specifications or requirements.

(b) Any protest concerning a solicitation or proposed award above the authority of the Director of Purchasing, after the opening, shall be submitted in writing and received by the County within five (5) business days from the posting of the recommendation for award on the Purchasing Division's website. Such protest must be made in writing to the Director of Purchasing.

(c) Any actual or prospective Vendor or offeror who has a substantial interest in and is aggrieved in connection with proposed award of a contract that does not exceed the amount of the award authority of the Director of Purchasing, may protest to the Director of Purchasing. The protest shall be submitted in writing and received within three (3) business days from the posting of the recommendation of award on the Purchasing Division's website.

(d) For purposes of this section, a business day is defined as Monday through Friday between 8:30 a.m. and 5:00 p.m. Failure to timely file a protest within the time prescribed for a solicitation or proposed contract award shall be a waiver of the Vendor's right to protest.

(e) As a condition of initiating any protest, the protestor shall present the Director of Purchasing a nonrefundable filing fee. The filing fee shall be based upon the estimated contract amount. For purposes of the protest, the estimated contract amount shall be the contract amount submitted by the protestor. If no contract amount was submitted, the estimated contract amount shall be the County's estimated contract price for the project. The County may accept cash, money order, certified check, or cashier's check, payable to Broward County Board of Commissioners. The filing fees are as follows:

Estimated Contract Amount	Filing Fee
$30,000 - $250,000	$500
$250,001 - $500,000	$1,000
$500,001 - $5 million	$3,000
Over $5 million	$5,000

29. **Public Entity Crimes Act:**

Vendor represents that its response to this solicitation will not violate the Public Entity Crimes Act, Section 287.133, Florida Statutes, which essentially provides that the County, as a public entity, may not transact any business with a Vendor in excess of the threshold amount provided in Purchasing Categories, Section 287.017, Florida Statutes, for category two purchases for a period of 36 months from the date of being placed on the

Convicted Vendor List. Vendor represents that its response to this solicitation is not a violation of Discrimination, Section 287.134, Florida Statutes, which essentially states that the County, as a public entity, cannot do business with an entity that is on the Discriminatory Vendor List i.e., has been found by a court to have discriminated as defined therein. Violation of this section shall result in cancellation of the County purchase and may result in debarment.

30. **Purchase by Other Governmental Agencies:**

Each governmental unit which avails itself of this contract will establish its own contract, place its own orders, issue its own purchase orders, be invoiced therefrom and make its own payments and issue its own exemption certificates as required by the Vendor. It is understood and agreed that Broward County is not a legally bound party to any contractual agreement made between any other governmental unit and the Vendor as a result of this solicitation.

31. **Public Records:**

The County is a public agency subject to Chapter 119, Florida Statutes Any material submitted in response to this solicitation will become a public document pursuant to Section 119.071, Florida Statutes. This includes material which the responding Vendor might consider to be confidential or a trade secret. Any claim of confidentially is waived upon submission, effective after opening pursuant to Section 119.071, Florida Statutes. As required by Chapter 119, Florida Statutes, the Contractor and all subcontractors for services shall comply with Florida's Public Records Law. Specifically, the Contractor and subcontractors shall:

(a) Keep and maintain public records that ordinarily and necessarily would be required by the County in order to perform the service;

(b) Provide the public with access to such public records on the same terms and conditions that the County would provide the records and at a cost that does not exceed that provided in Chapter 119, Florida Statutes, or as otherwise provided by law;

(c) Ensure that public records that are exempt or that are confidential and exempt from public record requirements are not disclosed except as authorized by law; and

(d) Meet all requirements for retaining public records and transfer to the County, at no cost, all public records in possession of the Vendor upon termination of the contract and destroy any duplicate public records that are exempt or confidential and exempt. All records stored electronically must be provided to the County in a format that is compatible with the information technology systems of the agency.

(e) The failure of Contractor to comply with the provisions set forth in this Article shall constitute a Default and Breach of this Contract and the County shall enforce the Default in accordance with the provisions set forth in the General Conditions, Article 12.

32. **Audit Right and Retention Records:**

County shall have the right to audit the books, records, and accounts of awarded Vendor that are related to this contract. Vendor shall keep such books, records, and accounts as may be necessary in order to record complete and correct entries to the contract.

Vendor shall preserve and make available, at reasonable times for examination and audit by County, all financial records, supporting documents, statistical records, and any other documents pertinent to this agreement for the required retention period of the Florida Public Records Act (Chapter 119, Florida Statutes), if applicable, or if the Florida Public Records Act is not applicable, for a minimum period of three (3) years after termination of this contract. If any audit has been initiated and audit findings have not been resolved at the end of the retention period of three (3) years, whichever is longer, the books, records and accounts shall be retained until resolution of the audit findings. If the Florida Public Records Act is determined by County to be applicable to Vendor’s records, Vendor shall comply with all requirements thereof; however, no confidentiality or nondisclosure requirement of either federal or state law shall be violated by Vendor. Any incomplete or incorrect entry in such books, records, and accounts shall be a basis for County’s disallowance and recovery of any payment upon such entry.

33. **Procurement Code:**

The entire chapter of the Broward County Procurement Code can be obtained from the Purchasing Division's website at: www.broward.org/purchasing.

34. **Ownership of Documents:**

All finished or unfinished documents, data, studies, surveys, drawings, maps, models, photographs, specifications and reports prepared or provided by Vendor in connection with this contract shall become the property of County, whether the Project for which they are made is completed or not, and shall be delivered to Contract Administrator within fifteen (15) days of the receipt of the written notice of termination. If applicable, County may withhold any payments then due to Vendor until Vendor complies with the provisions of this section.

35. **State of Florida Division of Corporations Requirements:**

It is the Vendor's responsibility to comply with all state and local business requirements. All corporations and partnerships must have the authority to transact business in the State of Florida and be in good standing with the Florida Secretary of State. For further information, contact the Florida Department of State, Division of Corporations.

The County will review the Vendor's business status based on the information provided in response to this solicitation. If the Vendor is an out-of-state or foreign corporation or partnership, the Vendor should obtain the authority to conduct business in the State of Florida.

36. **Cone of Silence Ordinance (Invitations for Bids):**

In accordance with Cone of Silence Ordinance, Section 1-266, Broward County Code of Ordinances, provides that after the advertisement of the solicitation, potential Vendors and their representatives are substantially restricted from communicating regarding the solicitation with the County Administrator, Deputy County Administrator, Assistant County Administrator, Assistants to the County Administrator, their respective support staff, or any or any staff person that is to evaluate or recommend selection in this solicitation process.

(a) For Invitations for Bids, the Cone of Silence shall be in effect for staff involved in the award decision process at the time of the solicitation advertisement. The Cone of Silence shall be in effect for the Board of County Commissioners and their staff upon bid opening for the solicitation.

(b) The Cone of Silence terminates when the County Commission or other awarding authority takes action which ends the solicitation.

(c) Any violations of this ordinance by any representative of the Vendor, including owner, employee, consultant, lobbyist, or actual or potential subcontractor or subconsultant may be reported to the County's Office of Professional Standards. If there is a determination of violation, a fine shall be imposed against the Vendor as provided in the County Code of Ordinances. Additionally, a determination of violation shall render any award to a Vendor who is found to have violated the Ordinance voidable, at the sole discretion of the Board of County Commissioners.

37. **Contingency Fees:**

By submission of this solicitation response, Vendor certifies that no contingency fees (sometimes known as a finder's fee) have been paid to any person or organization other than a bona-fide employee working solely for the Vendor to secure a contract made pursuant to this solicitation. Violation of this policy may result in termination of any resultant contract and/or possible debarment of the Vendor.

38. **Local Business Tax Receipt Requirements:**

All Vendors maintaining a business address within Broward County must have a current Broward County Local Business Tax Receipt issued by the Broward County Records, Taxes and Treasury Division prior to recommendation for award. Failure to do so may result in your solicitation response being deemed non-responsive. For further information on obtaining or renewing your firm's Local Business Tax Receipt, contact the Records, Taxes and Treasury Division at (954) 357-6200.

39. **Battery Disposal:**

The Vendor must deliver, furnish, recycle and dispose of all battery products in accordance with all applicable local, state and federal laws.

40. **Dun & Bradstreet Report Requirement:**

The County may review the Vendor's rating and payment performance to assist in determining a Vendor's responsibility when being evaluated for a contract award.

41. **Code Requirements:**

The Vendor and his or her subcontractors on this project must be familiar with all applicable Federal, State, County, City and Local Laws, Regulations or Codes and be governed accordingly as they will apply to this project and the actions or operations of those engaged in the work or concerning materials used. Contractor shall ask for and receive any required inspections.

42. **Special Notice:**

In accordance with OSHA Regulation 29 CFR 1926.1101(k) (2), Vendors are notified of the presence of asbestos containing material and/or presumed asbestos containing material at some Broward County locations.

43. **Samples:**

Samples or drawings, when required, shall be free of charge. If not mutilated or destroyed in the examination, Vendor will be notified to remove same at their expense. If samples are not removed within thirty (30) calendar days after written notice to the Vendor, they shall be considered as abandoned and the County shall have the right to dispose of them as its own property.

44. **Vendor Responsibilities:**

Unless otherwise specified, Vendor will be responsible for the provision, installation and performance of all equipment, materials, services, etc. offered in their response. Vendor is in no way relieved of the responsibility for the performance of all equipment furnished, or of assuring the timely delivery of materials, equipment, etc. even though it is not of their own manufacture.

45. **Vendor Evaluation:**

The Contract Administrator will document the Vendor's performance by completing a Performance Evaluation Form. A blank Performance Evaluation Form may be viewed at: broward.org/Purchasing/documents/vendorperformanceevaluationrequirements.pdf.

An interim performance evaluation of the successful Vendor may be submitted by the Contract Administrator during completion of the Project. A final performance evaluation shall be submitted when the Request for Final Payment to the Vendor is forwarded for approval. In either situation, the completed evaluation(s) shall be forwarded to the Director of Purchasing who shall provide a copy to the successful Vendor upon request. Said evaluation(s) may be used by the County as a factor in considering the responsibility of the Vendor for future solicitations.

46. **Warranties and Guarantees:**

The Vendor shall obtain all manufacturers' warranties and guarantees of all equipment and materials required by this solicitation and any resultant orders in the name of the Board and shall deliver same to point of delivery.

47. **"Or Equal" Clause:**

Whenever a material, article or piece of equipment is identified in the solicitation documents, including plans and specifications, by reference to manufacturers' or vendors' names, trade names, catalog numbers, or otherwise, any such reference is intended merely to establish a standard; and, unless it is followed by the words "no substitution is permitted" because of form, fit, function and quality, any material, article, or equipment of other manufacturers and vendors which will perform or serve the requirements of the general design will be considered equally acceptable provided the materials, article or equipment so proposed is, in the sole opinion of the County, equal in substance, quality, and function. The decision of the equivalent shall be determined in a reasonable manner and at the sole discretion of the County.

Bottom of Form

Insurance Requirements: (Refer to the Insurance Requirement Form)

A. The insurance requirement designated in the **Insurance Requirement Form** indicates the minimum coverage required for the scope of work, as determined by the Risk Management Division. Vendor shall provide verification of compliance such as a Certificate of Insurance, or a letter of verification from the Vendor's insurance agent/broker, which states the ability of the Vendor to meet the requirements upon award. The verification must be submitted within three business days of County's request. Vendor may be deemed non-responsive for failure to fully comply within stated timeframes. Final award shall be subject to receipt and acceptance by the County of proof of meeting all insurance requirements of the bid.

B. Without limiting any of the other obligations or liabilities of Vendor, Vendor shall provide, pay for, and maintain on a primary basis in force until all of its work to be performed under this Contract has been completed and accepted by County (or for such duration specified), at least the minimum insurance coverage and limits set forth in the Insurance Requirement Form under the following conditions listed below. If a limit or policy is not indicated on Insurance Requirement certificate by a checked box, it is not required as a condition of this contract.

1. Commercial General Liability with minimum limits per occurrence, combined single limit for bodily injury and property damage, and when indicated a minimum limit per aggregate. County is to be expressly included as an Additional Insured in the name of Broward County arising out of operations performed for the County, by or on behalf of Vendor, or acts or omissions of Vendor in connection with general supervision of such operation. If Vendor uses a subcontractor, then Vendor shall require that subcontractor names County as an Additional Insured.

2. Business Automobile Liability with minimum limits per occurrence, combined single limit for bodily injury and property damage. Scheduled autos shall be listed on Vendor's certificate of insurance. County is to be named as an additional insured in the name of Broward County.

   Note: Insurance requirements for Automobile Liability are not applicable where delivery will be made by a third party carrier. All vendors that will be making deliveries in their own vehicles are required to provide proof of insurance for Automobile Liability and other pertinent coverages as indicated on the Insurance Requirement certificate, prior to award. If deliveries are being made by a third party carrier, other pertinent coverages listed on the Insurance Requirement certificate are still required.

   Vendor should indicate how product is being delivered:

   Vendor Name: _____

   Company Vehicle: Yes ☐ or No ☐

   If Common Carrier (indicate carrier): _____

   Other: _____

3. Workers' Compensation insurance to apply for all employees in compliance with Chapter 440, the "Workers' Compensation Law" of the State of Florida and all applicable federal laws. The policy must include Employers' Liability with minimum limits each accident. If any operations are to be undertaken on or about navigable waters, coverage must be included for the U.S. Longshoremen & Harbor Workers Act and Jones Act.

4. Excess Liability/Umbrella Insurance may be used to satisfy the minimum liability limits required; however, the annual aggregate limit shall not be less than the highest "each occurrence" limit for the underlying liability policy. Vendor shall endorse County as an Additional Insured unless the policy provides coverage on a pure/true “Follow-form” basis.

5. Builder’s Risk or equivalent coverage (such as Property Insurance or Installation Floater) is required as a condition precedent to the issuance of the Second Notice to Proceed for projects involving but not limited to: changes to a building’s structural elements, work compromising the exterior of the building for any extended period of time, installation of a large single component, or remodeling where the cost of remodeling is 20% or more the value of the property. Coverage shall be, “All Risks” Completed Value form with a deductible not to exceed Ten Thousand Dollars ($10,000.00) each claim for all perils except for wind and flood.

6. For the peril of wind, the Vendor shall maintain a deductible that is commercially feasible which does not exceed five percent (5%) of the value of the Contract price. Such Policy shall reflect Broward County as an additional loss payee.

7. For the peril of flood, coverage must be afforded for the lesser of the total insurable value of such buildings or structures, and the maximum amount of flood insurance coverage available under the National Flood Program. Vendor shall maintain a deductible that is commercially feasible and does not exceed five percent (5%) of the value of the Contract price. Such Policy shall reflect Broward County as an additional loss payee.

8. The County reserves the right to provide Property Insurance covering the Project, materials, equipment and supplies intended for specific installation in the Project while such materials, equipment and supplies are located at the Project site, in transit, or while temporarily located away from the Project site. This coverage will not cover any of the Vendor’s or subcontractors’ tools, equipment, machinery or provide any business interruption or time element coverage to the Vendor(s).

9. If the County decides to purchase Property Insurance or provide for coverage under its existing insurance policy for this Project, then the insurance required to be carried by the Vendor may be modified to account for the insurance being provided by the County. Such modification may also include execution of Waiver of Subrogation documentation.

10. In the event that a claim occurs for this Project and is made upon the County’s insurance policy, for other than a windstorm, Vendor will pay at least Ten Thousand Dollars ($10,000.00) of the deductible amount for such claim.

11. Waiver of Occupancy Clause or Warranty: Policy must be specifically endorsed to eliminate any "Occupancy Clause" or similar warranty or representation that the building(s), addition(s) or structure(s) in the course of construction shall not be occupied without specific endorsement of the policy. The Policy must be endorsed to provide that the Builder's Risk coverage will continue to apply until final acceptance by County.

12. Pollution Liability or Environmental Impairment Liability: including clean-up costs, with minimum limits per claim, subject to a maximum deductible per claim. Such policy shall remain in force for the minimum length of time indicated, include an annual policy aggregate and name Broward County as an Additional Insured. Vendor shall be responsible for all deductibles in the event of a claim.

13. Professional Liability Insurance with minimum limits for each claim, subject to a maximum deductible per claim. Such policy shall remain in force for the minimum length of time indicated. Vendor shall notify County in writing within thirty (30) days of any claim filed or made against its Professional Liability Insurance policy. Vendor shall be responsible for all deductibles in the event of a claim. The deductible shall be indicated on the Vendor’s Certificate of Insurance.

C. Coverage must be afforded on a form no more restrictive than the latest edition of the respective policy form as filed by the Insurance Services Office. If the initial insurance expires prior to the completion and acceptance of the Work, renewal certificates shall be furnished upon expiration. County reserves the right to obtain a certified copy of any insurance policy required by this Section within fifteen (15) calendar days of a written request by County.

D. Notice of Cancellation and/or Restriction: the policy(ies) must be endorsed to provide Broward County with at least thirty (30) days' notice of cancellation and/or restriction.

E. The official title of the Certificate Holder is Broward County. This official title shall be used in all insurance documentation.

F. Broward County's Risk Management Division reserves the right, but not the obligation, to review and revise any insurance requirements at the time of contract renewal and/or any amendments, not limited to deductibles, limits, coverages and endorsements based on insurance market conditions affecting the availability or affordability of coverage; or changes in the scope of work/specifications affecting the applicability of coverage.

1. Litigation History

A. All Vendors are required to disclose to the County all "material" cases filed, pending, or resolved during the last three (3) years prior to the solicitation response due date, whether such cases were brought by or against the Vendor, any parent or subsidiary of the Vendor, or any predecessor organization. Additionally, all Vendors are required to disclose to the County all "material" cases filed, pending, or resolved against any principal of Vendor, regardless of whether the principal was associated with Vendor at the time of the "material" cases against the principal, during the last three (3) years prior to the solicitation response. A case is considered to be "material" if it relates, in whole or in part, to any of the following:

i. A similar type of work that the vendor is seeking to perform for the County under the current solicitation;
ii. An allegation of fraud, negligence, error or omissions, or malpractice against the vendor or any of its principals or agents who would be performing work under the current solicitation;
iii. A vendor's default, termination, suspension, failure to perform, or improper performance in connection with any contract;
iv. The financial condition of the vendor, including any bankruptcy petition (voluntary and involuntary) or receivership; or
v. A criminal proceeding or hearing concerning business-related offenses in which the vendor or its principals (including officers) were/are defendants.

B. For each material case, the Vendor is required to provide all information identified in the **Litigation History Form**. Additionally, the Vendor shall provide a copy of any judgment or settlement of any material case during the last three (3) years prior to the solicitation response. Redactions of any confidential portions of the settlement agreement are only permitted upon a certification by Vendor that all redactions are required under the express terms of a pre-existing confidentiality agreement or provision.

C. The County will consider a Vendor's litigation history information in its review and determination of responsibility.

D. If the Vendor is a joint venture, the information provided should encompass the joint venture and each of the entities forming the joint venture.

E. A vendor is required to disclose to the County any and all cases(s) that exist between the County and any of the Vendor's subcontractors/subconsultants proposed to work on this project during the last five (5) years prior to the solicitation response.

F. Failure to disclose any material case, including all requested information in connection with each such case, as well as failure to disclose the Vendor's subcontractors/subconsultants litigation history against the County, may result in the Vendor being deemed non-responsive.

LITIGATION HISTORY FORM

The completed form(s) should be returned with the Vendor's submittal. If not provided with submittal, the Vendor must submit within three business days of County's request. Vendor may be deemed non-responsive for failure to fully comply within stated timeframes.

☐ There are no material cases for this Vendor; or

☐ Material Case(s) are disclosed below:

Is this for a: (check type) ☐ Parent, ☐ Subsidiary, or ☐ Predecessor Firm?	If Yes, Name of Parent/Subsidiary/Predecessor: ☐ or No ☐
Party	Vendor is Plaintiff ☐ Vendor is Defendant ☐
Case Number, Name, and Date Filed	☐
Name of Court or other tribunal	☐
Type of Case	Bankruptcy ☐ Civil ☐ Criminal ☐ Administrative/Regulatory ☐
Claim or Cause of Action and Brief description of each Count	☐
Brief description of the Subject Matter and Project Involved	☐
Disposition of Case (Attach copy of any applicable Judgment, Settlement Agreement and Satisfaction of Judgment.)	Pending ☐ Settled ☐ Dismissed ☐ Judgment Vendor's Favor ☐ Judgment Against Vendor ☐ If Judgment Against, is Judgment Satisfied? Yes ☐ No ☐
Opposing Counsel	Name: ☐ Email: ☐ Telephone Number: ☐

Vendor Name:

LOBBYIST REGISTRATION REQUIREMENT CERTIFICATION FORM

The completed form should be submitted with the solicitation response but must be submitted within three business days of County's request. Vendor may be deemed non-responsive for failure to fully comply within stated timeframes.

The Vendor certifies that it understands if it has retained a lobbyist(s) to lobby in connection with a competitive solicitation, it shall be deemed non-responsive unless the firm, in responding to the competitive solicitation, certifies that each lobbyist retained has timely filed the registration or amended registration required under Broward County Lobbyist Registration Act, Section 1-262, Broward County Code of Ordinances; and it understands that if, after awarding a contract in connection with the solicitation, the County learns that the certification was erroneous, and upon investigation determines that the error was willful or intentional on the part of the Vendor, the County may, on that basis, exercise any contractual right to terminate the contract for convenience.

The Vendor hereby certifies that: (select one)

☐ It has not retained a lobbyist(s) to lobby in connection with this competitive solicitation; however, if retained after the solicitation, the County will be notified.

☐ It has retained a lobbyist(s) to lobby in connection with this competitive solicitation and certified that each lobbyist retained has timely filed the registration or amended registration required under Broward County Lobbyist Registration Act, Section 1-262, Broward County Code of Ordinances.

It is a requirement of this solicitation that the names of any and all lobbyists retained to lobby in connection with this solicitation be listed below:

Name of Lobbyist:

Lobbyist's Firm:

Phone:

E-mail:

Name of Lobbyist:

Lobbyist's Firm:

Phone:

E-mail:

Authorized Signature/Name: **Date:**

Title:

Vendor Name:

LOCAL BUSINESS OR LOCALLY-HEADQUARTERED BUSINESS CERTIFICATION FORM

The completed and signed form and a copy of business's local business tax receipt (or if exempt, documentation establishing physical presence at location for one year prior to bid submission) should be returned with the Vendor's submittal. If not provided with submittal, the Vendor must submit within three business days of County's request. Failure to timely submit may render the business ineligible for application of the Local Preference.

This form is used to determine bidder's eligibility for Local Preference, in accordance with Section 1-74, et. seq., Broward County Code of Ordinances.

If the low, responsive and responsible bidder is not a local or a locally-headquartered business, any and all eligible local businesses submitting a price within ten percent (10%) of the non-local low responsive and responsible bidder, and any and all eligible locally-headquartered businesses submitting a price within fifteen percent (15%) of the non-local low responsive and responsible bidder, then all eligible bidders shall have an opportunity to submit a best and final bid, equal to or lower than the low bid.

If the low responsive and responsible bidder is a local business, but not a locally-headquartered business, then any and all locally-headquartered businesses submitting a bid price within five percent (5%) of the local low bidder shall have an opportunity to submit a best and final bid equal to or lower than the low bid.

Bidders must be determined responsive and responsible prior to submitting a best and final bid. Award, if any, shall be made to the responsive and responsible bidder offering the lowest best and final bid, regardless of location.

A Local Business is a business which:

A. possesses a valid local business tax receipt (or if exempt, documentation establishing physical presence at location) issued at least one year prior to bid submission;
B. has a physical business address located within Broward County which the business operates or performs business;
C. is in an area zoned for the conduct of the business; and
D. provides a substantial component of goods and/or services being offered from that location.

A Locally-Headquartered Business is a local business which has its principal place of business in Broward County. A principal place of business is defined as the nerve center of overall direction, control, and coordination of activities of the business. If a business only has one location, the location shall be considered the principle place of business.

Vendor shall check all that apply. Vendor hereby certifies it is a:

☐ Local Business ☐ Locally-Headquartered Business

Local or Locally-Headquartered Business Address:

☐ Vendor is not a Local Business or Locally-Headquartered Business in Broward County

AUTHORIZED SIGNATURE/ NAME	TITLE	COMPANY	DATE

Office of Economic and Small Business Requirements: CBE Goal Participation

A. In accordance with the Broward County Business Opportunity Act of 2012, Section 1-81, Code of Ordinances, as amended (the "Business Opportunity Act"), the County Business Enterprise (CBE) Program is applicable to this contract. All Vendors responding to this solicitation are required to utilize CBE firms to perform the assigned participation goal for this contract.

B. The CBE participation goal will be established based on the expected expenditure amount for the proposed scope of services for the project. The Office of Economic and Small Business Development (OESBD) will not include alternate items, optional services or allowances when establishing the CBE participation goal. If the County subsequently chooses to award any alternate items, optional services or allowances as determined by OESBD and the Contract Administrator to be related to the scope of services, OESBD may apply the established CBE participation goal. In such an instance, the County will issue a written notice to the successful Vendor that the CBE participation goal will also apply to the alternate items, optional services or allowances. Vendor shall submit all required forms pertaining to its compliance with the CBE participation goal, as applicable. Failure by Vendor to submit the required forms may result in the rejection of Vendor's solicitation submittal prior to the award or failure to comply with the contract requirements may have an impact on the vendor performance evaluation post award, as applicable.

C. CBE Program Requirements: Compliance with CBE participation goal requirements is a matter of responsibility; Vendor should submit all required forms and information with its solicitation submittal. If the required forms and information are not provided with the Vendor's solicitation submittal, then Vendor must supply the required forms and information no later than three (3) business days after request by OESBD. Vendor may be deemed non-responsible for failure to fully comply with CBE Program Requirements within these stated timeframes.

1. Vendor should include in its solicitation submittal a **Letter Of Intent Between Bidder/Offeror and County Business Enterprise (CBE) Subcontractor/Supplier** for each CBE firm the Vendor intends to use to achieve the assigned CBE participation goal. The form is available at the following link: http://www.broward.org/EconDev/Documents/CBELetterOfIntent.pdf

2. If Vendor is unable to attain the CBE participation goal, Vendor should include in its solicitation submittal an **Application for Evaluation of Good Faith Efforts** and all of the required supporting information. The form is available at the following link: http://www.broward.org/EconDev/WhatWeDo/Documents/GoodFaithEffortEval.pdf

D. OESBD maintains an online directory of CBE firms. The online directory is available for use by Vendors at https://webapps4.broward.org/smallbusiness/sbdirectory.aspx.

E. For detailed information regarding the CBE Program contact the OESBD at (954) 357-6400 or visit the website at: http://www.broward.org/EconDev/SmallBusiness/

F. If awarded the contract, Vendor agrees to and shall comply with all applicable requirements of the Business Opportunity Act and the CBE Program in the award and administration of the contract.

1. No party to this contract may discriminate on the basis of race, color, sex, religion, national origin, disability, age, marital status, political affiliation, sexual orientation, pregnancy, or gender identity and expression in the performance of this contract.

2. All entities that seek to conduct business with the County, including Vendor or any Prime Contractors, Subcontractors, and Bidders, shall conduct such business activities in a fair and reasonable manner, free from fraud, coercion, collusion, intimidation, or bad faith. Failure to do so may result in the cancellation of this solicitation, cessation of contract negotiations, revocation of CBE certification, and suspension or debarment from future contracts.

3. If Vendor fails to meet or make Good Faith Efforts (as defined in the Business Opportunity Act) to meet the CBE participation commitment (the "Commitment"), then Vendor shall pay the County liquidated damages

in an amount equal to fifty percent (50%) of the actual dollar amount by which Vendor failed to achieve the Commitment, up to a maximum amount of ten percent (10%) of the total contract amount, excluding costs and reimbursable expenses. An example of this calculation is stated in Section 1-81.7, Broward County Code of Ordinances.

4. Vendor shall comply with all applicable requirements of the Business Opportunity Act in the award of this contract. Failure by Vendor to carry out any of these requirements shall constitute a material breach of the contract, which shall permit the County to terminate this contract or to exercise any other remedy provided under this contract, the Broward County Code of Ordinances, the Broward County Administrative Code, or other applicable laws, with all such remedies being cumulative.

5. Vendor shall pay its CBE subcontractors and suppliers, within fifteen (15) days following receipt of payment from the County, for all completed subcontracted work and supplies. If Vendor withholds an amount from CBE subcontractors or suppliers as retainage, such retainage shall be released and paid within fifteen (15) days following receipt of payment of retained amounts from the County.

6. Vendor understands that the County will monitor Vendor's compliance with the CBE Program requirements. Vendor must provide OESBD with a Monthly Utilization Report (MUR) to confirm its compliance with the Commitment agreed to in the contract; timely submission of the MUR every month throughout the term of the contract, including amendment and extension terms, is a condition precedent to the County's payment of Vendor under the contract.

General Decision Number: FL180203 01/05/2018 FL203

Superseded General Decision Number: FL20170203

State: Florida

Construction Type: Highway

County: Broward County in Florida.

HIGHWAY CONSTRUCTION PROJECTS

Note: Under Executive Order (EO) 13658, an hourly minimum wage of $10.35 for calendar year 2018 applies to all contracts subject to the Davis-Bacon Act for which the contract is awarded (and any solicitation was issued) on or after January 1, 2015. If this contract is covered by the EO, the contractor must pay all workers in any classification listed on this wage determination at least $10.35 per hour (or the applicable wage rate listed on this wage determination, if it is higher) for all hours spent performing on the contract in calendar year 2018. The EO minimum wage rate will be adjusted annually. Please note that this EO applies to the above-mentioned types of contracts entered into by the federal government that are subject to the Davis-Bacon Act itself, but it does not apply to contracts subject only to the Davis-Bacon Related Acts, including those set forth at 29 CFR 5.1(a)(2)-(60). Additional information on contractor requirements and worker protections under the EO is available at www.dol.gov/whd/govcontracts.

Modification Number	Publication Date
0	01/05/2018

* SUFL2013-021 08/19/2013

	Rates	Fringes
CARPENTER	$ 16.05	0.00
CEMENT MASON/CONCRETE FINISHER, Includes Form Work	$ 15.31	0.00
ELECTRICIAN	$ 22.15	0.00
FENCE ERECTOR	$ 12.82	0.00
HIGHWAY/PARKING LOT STRIPING: Operator (Striping Machine)	$ 15.75	0.00
HIGHWAY/PARKING LOT STRIPING: Painter	$ 12.13	0.00
HIGHWAY/PARKING LOT STRIPING: Operator (Spray Nozzleman)	$ 11.94	0.00
INSTALLER - GUARDRAIL	$ 12.37	0.00

IRONWORKER, ORNAMENTAL.....$ 13.48 0.00

IRONWORKER, REINFORCING.....$ 16.84 0.00

IRONWORKER, STRUCTURAL.....$ 16.42 0.00

LABORER (Traffic Control
Specialist incl. placing of
cones/barricades/barrels -
Setter, Mover, Sweeper).....$ 11.57 0.00

LABORER: Asphalt, Includes
Raker, Shoveler, Spreader and
Distributor.....$ 11.84 0.00

LABORER: Common or General.....$ 10.76 0.00

LABORER: Flagger.....$ 12.53 0.00

LABORER: Grade Checker.....$ 12.41 0.00

LABORER: Landscape &
Irrigation.....$ 9.12 0.00

LABORER: Mason Tender -
Cement/Concrete.....$ 13.91 3.50

LABORER: Pipelayer.....$ 14.61 0.00

OPERATOR:
Backhoe/Excavator/Trackhoe.....$ 15.43 0.00

OPERATOR: Bobcat/Skid
Steer/Skid Loader.....$ 12.88 0.00

OPERATOR: Boom.....$ 18.50 0.00

OPERATOR: Boring Machine.....$ 17.33 0.00

OPERATOR: Broom/Sweeper.....$ 13.41 0.00

OPERATOR: Bulldozer.....$ 17.07 0.00

OPERATOR: Concrete Finishing
Machine.....$ 15.44 0.00

OPERATOR: Concrete Saw.....$ 13.76 0.00

OPERATOR: Crane.....$ 19.14 0.00

OPERATOR: Curb Machine.....$ 21.33 0.00

OPERATOR: Distributor.....$ 13.13 0.00

OPERATOR: Drill.....$ 14.78 0.00

OPERATOR: Forklift.....$ 16.32 0.00

OPERATOR: Gradall.....$ 14.71 0.00

OPERATOR: Grader/Blade.....$ 18.98 0.00

OPERATOR: Loader.....$ 13.84 0.00

OPERATOR: Mechanic.....$ 18.03 0.00

OPERATOR: Milling Machine.....$ 14.89 0.00

OPERATOR: Oiler.....$ 16.32 0.00

OPERATOR: Paver (Asphalt,
Aggregate, and Concrete).....$ 14.34 0.00

OPERATOR: Piledriver.....$ 17.23 0.00

OPERATOR: Post Driver
(Guardrail/Fences).....$ 13.71 0.00

OPERATOR: Roller.....$ 13.10 0.00

OPERATOR: Scraper.....$ 12.01 0.00

OPERATOR: Screed.....$ 14.85 0.00

OPERATOR: Tractor.....$ 12.62 0.00

OPERATOR: Trencher.....$ 14.58 0.00

PAINTER: Spray.....$ 16.52 0.00

SIGN ERECTOR.....$ 14.23 0.00

TRAFFIC SIGNALIZATION:
Traffic Signal Installation.....$ 14.74 0.00

TRUCK DRIVER: Distributor
Truck.....$ 14.96 2.17

TRUCK DRIVER: Dump Truck.....$ 11.71 0.00

TRUCK DRIVER: Flatbed Truck.....$ 14.28 0.00

TRUCK DRIVER: Lowboy Truck.....$ 14.06 0.00

TRUCK DRIVER: Slurry Truck.....$ 11.96 0.00

TRUCK DRIVER: Vactor Truck.....$ 14.21 0.00

TRUCK DRIVER: Water Truck.....$ 13.22 0.00

WELDERS - Receive rate prescribed for craft performing operation to which welding is incidental.

==========

Note: Executive Order (EO) 13706, Establishing Paid Sick Leave for Federal Contractors applies to all contracts subject to the Davis-Bacon Act for which the contract is awarded (and any solicitation was issued) on or after January 1, 2017. If this

contract is covered by the EO, the contractor must provide employees with 1 hour of paid sick leave for every 30 hours they work, up to 56 hours of paid sick leave each year. Employees must be permitted to use paid sick leave for their own illness, injury or other health-related needs, including preventive care; to assist a family member (or person who is like family to the employee) who is ill, injured, or has other health-related needs, including preventive care; or for reasons resulting from, or to assist a family member (or person who is like family to the employee) who is a victim of, domestic violence, sexual assault, or stalking. Additional information on contractor requirements and worker protections under the EO is available at www.dol.gov/whd/govcontracts.

Unlisted classifications needed for work not included within the scope of the classifications listed may be added after award only as provided in the labor standards contract clauses (29CFR 5.5 (a) (1) (ii)).

The body of each wage determination lists the classification and wage rates that have been found to be prevailing for the cited type(s) of construction in the area covered by the wage determination. The classifications are listed in alphabetical order of "identifiers" that indicate whether the particular rate is a union rate (current union negotiated rate for local), a survey rate (weighted average rate) or a union average rate (weighted union average rate).

Union Rate Identifiers

A four letter classification abbreviation identifier enclosed in dotted lines beginning with characters other than "SU" or "UAVG" denotes that the union classification and rate were prevailing for that classification in the survey. Example: PLUM0198-005 07/01/2014. PLUM is an abbreviation identifier of the union which prevailed in the survey for this classification, which in this example would be Plumbers. 0198 indicates the local union number or district council number where applicable, i.e., Plumbers Local 0198. The next number, 005 in the example, is an internal number used in processing the wage determination. 07/01/2014 is the effective date of the most current negotiated rate, which in this example is July 1, 2014.

Union prevailing wage rates are updated to reflect all rate changes in the collective bargaining agreement (CBA) governing this classification and rate.

Survey Rate Identifiers

Classifications listed under the "SU" identifier indicate that no one rate prevailed for this classification in the survey and the published rate is derived by computing a weighted average rate based on all the rates reported in the survey for that classification. As this weighted average rate includes all rates reported in the survey, it may include both union and

non-union rates. Example: SULA2012-007 5/13/2014. SU indicates the rates are survey rates based on a weighted average calculation of rates and are not majority rates. LA indicates the State of Louisiana. 2012 is the year of survey on which these classifications and rates are based. The next number, 007 in the example, is an internal number used in producing the wage determination. 5/13/2014 indicates the survey completion date for the classifications and rates under that identifier.

Survey wage rates are not updated and remain in effect until a new survey is conducted.

Union Average Rate Identifiers

Classification(s) listed under the UAVG identifier indicate that no single majority rate prevailed for those classifications; however, 100% of the data reported for the classifications was union data. EXAMPLE: UAVG-OH-0010 08/29/2014. UAVG indicates that the rate is a weighted union average rate. OH indicates the state. The next number, 0010 in the example, is an internal number used in producing the wage determination. 08/29/2014 indicates the survey completion date for the classifications and rates under that identifier.

A UAVG rate will be updated once a year, usually in January of each year, to reflect a weighted average of the current negotiated/CBA rate of the union locals from which the rate is based.

WAGE DETERMINATION APPEALS PROCESS

1.) Has there been an initial decision in the matter? This can be:

* an existing published wage determination
* a survey underlying a wage determination
* a Wage and Hour Division letter setting forth a position on a wage determination matter
* a conformance (additional classification and rate) ruling

On survey related matters, initial contact, including requests for summaries of surveys, should be with the Wage and Hour Regional Office for the area in which the survey was conducted because those Regional Offices have responsibility for the Davis-Bacon survey program. If the response from this initial contact is not satisfactory, then the process described in 2.) and 3.) should be followed.

With regard to any other matter not yet ripe for the formal process described here, initial contact should be with the Branch of Construction Wage Determinations. Write to:

Branch of Construction Wage Determinations
Wage and Hour Division
U.S. Department of Labor
200 Constitution Avenue, N.W.

Washington, DC 20210

2.) If the answer to the question in 1.) is yes, then an interested party (those affected by the action) can request review and reconsideration from the Wage and Hour Administrator (See 29 CFR Part 1.8 and 29 CFR Part 7). Write to:

Wage and Hour Administrator
U.S. Department of Labor
200 Constitution Avenue, N.W.
Washington, DC 20210

The request should be accompanied by a full statement of the interested party's position and by any information (wage payment data, project description, area practice material, etc.) that the requestor considers relevant to the issue.

3.) If the decision of the Administrator is not favorable, an interested party may appeal directly to the Administrative Review Board (formerly the Wage Appeals Board). Write to:

Administrative Review Board
U.S. Department of Labor
200 Constitution Avenue, N.W.
Washington, DC 20210

4.) All decisions by the Administrative Review Board are final.

==========

END OF GENERAL DECISION

SCRUTINIZED COMPANIES LIST REQUIREMENT CERTIFICATION FORM

The completed and signed form(s) should be returned with the Vendor's submittal. If not provided with submittal, the Vendor must submit within three business days of County's request. Vendor may be deemed non-responsive for failure to fully comply within stated timeframes.

Any company, principals, or owners on the Scrutinized Companies with Activities in Sudan List, the Scrutinized Companies with Activities in the Iran Petroleum Energy Sector List, or the Scrutinized Companies that Boycott Israel List is prohibited from submitting a response to a solicitation for goods or services in an amount equal to or greater than $1 million.

The Vendor, by virtue of the signature below, certifies that:

a. The Vendor, owners, or principals are aware of the requirements of Sections 287.135, 215.473, and 215.4725 Florida Statutes, regarding Companies on the Scrutinized Companies with Activities in Sudan List, the Scrutinized Companies with Activities in the Iran Petroleum Energy Sector List, or the Scrutinized Companies that Boycott Israel List; and

b. The Vendor, owners, or principals, are eligible to participate in this solicitation and are not listed on either the Scrutinized Companies with Activities in Sudan List, the Scrutinized Companies with Activities in the Iran Petroleum Energy Sector List, or the Scrutinized Companies that Boycott Israel List; and

c. If awarded the Contract, the Vendor, owners, or principals will immediately notify the County in writing if any of its principals are placed on the Scrutinized Companies with Activities in Sudan List, the Scrutinized Companies with Activities in the Iran Petroleum Energy Sector List, or the Scrutinized Companies that Boycott Israel List.

Authorized Signature/Name	**Title**	**Vendor Name**	**Date**

SPECIAL INSTRUCTIONS TO VENDORS (IN ADDITION TO GENERAL CONDITIONS)

General Roadway and Miscellaneous Construction

A. Scope:

Vendors are invited to respond for an open-end contract for General Roadway and Miscellaneous Construction to for the Broward County Highway Bridge Maintenance Division and various other Broward County agencies that may have need of these services and products.

The initial contract period shall start on date of award, or upon expiration of the current contract (December 7, 2018), whichever is later and shall terminate **one (1) year** from that date. The Director of Purchasing may renew this contract for **two (2) one-year renewal period(s)** subject to vendor acceptance, satisfactory performance and determination that renewal will be in the best interest of the County. Notification of Intent to Renew will be sent in advance of expiration date of this contract.
The Vendor will complete delivery and the County will receive delivery on any orders mailed to the Vendor prior to the date of expiration.

All prices, terms and conditions shall remain fixed for the initial period of the contract. In addition, all prices, terms and conditions shall remain fixed for the renewal period of the contract. There will be no allowable price escalations for fuel costs throughout any contract period(s), unless otherwise specified in this document.

No guarantee is expressed or implied as to the total quantity of commodities/services to be purchased under any open end contract. Estimated quantities will be used for bid comparison purposes only. The Board of County Commissioners reserves the right to: issue purchase orders as and when required, or, issue a blanket purchase order for individual agencies and release partial quantities or, issue instructions for use of direct purchase orders by various County agencies, make random, open market purchases for any or all of the item(s) on any open end contract or, any combination of the preceding. No delivery shall become due or be acceptable without a written order by the County, unless otherwise provided for in the contract. Such order will contain the quantity, time of delivery and other pertinent data. However, on items urgently required, the seller may be given telephone notice, to be confirmed by an order in writing.

B. Specifications and Requirements:

Specifications and Requirements, are included hereto and made a part hereof. Whenever the Technical Specifications address a third party (i.e. manufacturer, applicator, subcontractor, etc.) it is to be construed as the Vendor through the third party.

C. Office of Economic and Small Business Requirements:

This solicitation has the following County Business Enterprise Goals: **30% CBE Goals**. Vendors must follow the instructions included in the **Office of Economic and Small Business Development Requirements** and submit all required forms and information as instructed.

D. Federal Transit Administration Requirements:

Not applicable to this solicitation.

E. Vendor Responsibilities:

The Vendor will be responsible for the provision, installation (if applicable, per Specifications and Requirements) and performance of all equipment, materials, services, etc. offered in his or her submittal. The Vendor is in no way relieved of the responsibility for the performance of all equipment furnished, or of assuring the timely delivery of materials, equipment, etc. even though it is not of his or her own manufacture.

Vendor shall perform the Work with its own organization, amounting to not less than **25%** percent of the Contract Price.

F. Licensing Requirements:

Proof of licensing should be returned with the Vendor's submittal. If not provided with submittal, the Vendor must submit within three business days of County's request. Vendor may be deemed non-responsive for failure to fully comply within stated timeframes.

In order to be considered a responsible and responsive Vendor for the scope of work set forth in this solicitation, the Vendor shall possess one of the following licenses (including any specified State registration, if applicable) at the time of solicitation submittal. Any certificate of competency that meets or exceeds those specified or can legally perform the scope of work specified, as determined by the County, will be considered responsible and responsive to the solicitation.

STATE:	CERTIFIED GENERAL CONTRACTOR;
	OR
BROWARD COUNTY:	GENERAL BUILDING CONTRACTOR CLASS "A"; (Must be registered with the State)
	OR
	GENERAL ENGINEERED CONSTRUCTION BUILDER
	OR
	MAJOR ROADS - CLASS "A"

Any work performed not within the scope of the above contract must be performed by a licensed subcontractor.

G. Public Bid Disclosure Act:

In compliance with the Public Bid Disclosure Act, Section 218.80, Florida Statutes, each permit, license and/or fee which the Contractor will have to pay the County by virtue of this work/project (before or during construction) is set forth below and includes the dollar amount or the percentage method or unit method to be paid of all permits, licenses and/or fees which includes but is not limited to all licensing fees, permit fees, impact fees, inspection fees and certificates of occupancy (CO).

> The using agency will be responsible for paying for any and all permits, licenses, and fees, imposed on the Work by agencies of the Broward County Commission. This does not alleviate the Vendor from obtaining the permits.

Licenses, permits and fees which may be required by The State of Florida, State Agencies or by other local governmental entities are not included in the above list.

H. Permits and Fees: (for Agencies other than Broward County Commissioners)

The Vendor shall procure and pay for all permits and licenses, charges and fees and give all notices necessary and incidental to the due and lawful prosecution of the work. The cost of all permits, fees, etc., shall be included in price bid except where noted in the specifications and requirements.

The contract includes an allowance amount for the below items. Refer to Specifications and Requirements for additional details on use of allowances.

Irrigation System Estimated Annual Amount: $80,000

This allowance will allow the Contractor to be reimbursed for actual cost of installations or modifications to site-specific irrigation systems in compliance with municipal or county ordinances. Irrigation work is typically required for newly installed landscaping. The Contract Administrator will approve use of this line item and no mark-up shall be allowed.

Unforeseen Conditions Estimated Annual Amount: $200,000

This allowance will allow the contractor to be reimbursed for actual cost of unanticipated construction activities not specified in the contract related to soil, utility, or other conditions that are discovered after the start of construction and affect construction costs. The Contract Administrator will approve use of this line and no mark-up shall be allowed.

Parts and Materials Estimated Annual Amount: $200,000

This allowance will allow the Contractor to be reimbursed for actual cost of required parts and material items not specified in the contract commodity lines such as structures, equipment, traffic control devices, etc. The Contract Administrator will approve use of this line item and no mark-up shall be allowed.

Specialized Construction Activities Estimated Annual Amount: $200,000

This allowance will allow the Contractor to be reimbursed for actual cost of construction activities not specified in the contract related to earthwork, sidewalk repairs, concrete pavement repairs, etc. The Contract Administrator will approve use of this line item and no mark-up shall be allowed.

Permit Fees for non-Broward County Agencies Estimated Annual Amount: $10,000

This allowance is for non-Broward County agency permit fees. Municipalities and utilities affected by construction often charge fees for work within their jurisdiction. The amounts vary, but are generally based on the total cost of construction. The Contractor shall be required to provide proof of payment with no mark-up at the time of request for payment. The Contract Administrator will approve use of this line item and no mark-up shall be allowed.

Security Services Estimated Annual Amount: $10,000

This allowance will allow the Contractor to be reimbursed for actual cost of security services. The Contract Administrator will approve use of this line item and no mark-up shall be allowed.

I. Prevailing Wage Rates:

Section 26-5 of the Broward County Code of Ordinances, provides that in all non-federally funded construction procurement activity of $250,000 or more, the rate of wages and fringe benefit payments for all laborers, mechanics, and apprentices shall not be less than those payments for similar skills in classifications of work in like industries as determined by the Secretary of Labor and as published in the Federal Register (latest revision). The applicable Prevailing Wage Rate Tables are attached.

J. Liquidated Damages:

1. The work to be performed under this Contract shall be commenced upon issuance of Purchase Order or Notice to Proceed, which will not be issued until receipt of all required documents.

2. The work shall be completed and ready for final payment per schedule identified in the Notice to Proceed and mutually agreed upon by the County and Vendor.

3. Upon failure of the Vendor to complete a project awarded pursuant to this contract within the specified period of time (plus approved extensions, if any) the Vendor shall pay to County the following for each calendar day (plus approved extensions) after the time specified for completion and readiness for final payment.

Original Contract Amount	Daily Charge Per Calendar Day
$50,000 and under	$956
Over $50,000 but less than $250,000	$964
$250,000 but less than $500,000	$1,241
$500,000 but less than $2,500,000	$1,665
$2,500,000 but less than $5,000,000	$2,712
5,000,000 but less than $10,000,000	$3,447

4. This amount is not a penalty but liquidated damages to the County. Liquidated damages are hereby fixed and agreed upon between the parties, recognizing the impossibility of precisely ascertaining the amount of damages that will be sustained by the County as a consequence of such delay. Vendor acknowledges and agrees that damages to County from untimely completion are extremely difficult to determine, and accordingly the Vendor agrees that the amount of liquidated damages provided for herein is the nearest and most exact measure of damages for such delays.

5. The County is authorized to deduct liquidated damage amounts from the monies due to Vendor for the work under this contract, or as much thereof as the County may, at its own option, deem just and reasonable.

K. Payment:

1. Final payment and release of retainage will be paid in full upon completion of all requirements.

2. Prior to the first Application for Payment, the Vendor shall submit to the County, a schedule of values of the various portions of the Work, aggregating the total Contract Sum. Each item in the schedule, when approved by the County, shall be used only as a basis for the VENDOR'S Application for Payment.

3. If the solicitation includes an allowance amount for permits, parts on a pass thru, or other identified types of allowances, the following shall apply to payment of allowances:

    a. The allowance amount and scope of allowance is identified in the solicitation's Specifications and Requirements.

    b. The allowance amount is an estimate only; payment is not guaranteed and is only paid based on actual costs incurred by the Vendor for the identified allowance.

    c. The Contract Administrator or designee must authorize use of any allowances (per Specifications and Requirements) prior to Vendor incurring costs related to an allowance amount.

    d. No markup or additional fees are allowed on payment of allowance items. This includes, but is not limited to, overhead, profit, "runner's fees", etc.

    e. Allowances for Permit Fees: payment for permit fees does not include licenses, permit expediting services, re-inspection fees, and expired permit fees. Proof of permit fee(s) shall be submitted with Vendor's invoice for payment.

    f. Allowance for Parts on a Pass Thru: Vendor must charge the County the same invoice prices as it is charged by its suppliers. A copy of the Vendor's invoice(s) from supplier(s) for approved parts and materials shall be submitted with the Vendor's invoice for payment. In cases where the Vendor manufactures its own parts, Vendor will charge the County a price no higher than it charges its most favored customer.

SPECIFICATIONS AND REQUIREMENTS

GENERAL ROADWAY AND MISCELLANEOUS CONSTRUCTION

1. SCOPE

Furnish all labor, materials, equipment, supervision and incidentals required to perform roadway milling, resurfacing, pavement marking, miscellaneous pavement repair activities, drainage repair work, traffic control and signalization, landscaping, signing and pavement marking, guardrail, maintenance of traffic and miscellaneous maintenance activities in a competent and professional manner in compliance with all applicable building, safety, technical and related codes and laws. Construction activities shall conform to the latest edition of:

- **FDOT Standard Specifications for Road and Bridge Construction, 2018** [Referenced throughout the Contract as "FDOT Standard Specifications"] (including all referenced and supplemental standards and specifications within (including ASTM and ANSI specifications), and all amendments, mandatory revisions, workbooks, and implemented modifications in effect as of January 2018) (available at: http://www.dot.state.fl.us/specificationsoffice/Implemented/SpecBooks/default.shtm).
- **FDOT Design Standards for Design, Construction, Maintenance and Utility Operations on the State Highway System, 2018, Topic No. 625- 010-003** [**Standard Indexes**] and Pay Items [Referenced throughout the Contract as "FDOT Design Standards"] [*Note that Maintenance of Traffic/Work Zone Traffic Control standards are incorporated in Index Series 600 of this document] (available at: http://www.dot.state.fl.us/rddesign/DesignStandards/Standards.shtm).
- **The Americans with Disabilities Act Accessibility Guidelines (ADAAG)** (available at: http://www.ada.gov/2010ADAstandards_index.htm).
- **Minimum Standards Applicable to Public Right-of-Way Under Broward County, Florida Jurisdiction (dated October 2005)**, [Referenced throughout the Contract as "County's Minimum Standards"] (available at: www.broward.org/Traffic/Documents/minstdsmanual%2010-25-05.pdf).

GENERAL CONDITIONS FOR INDIVIDUAL PROJECTS

Projects shall include delivery and installation at locations Countywide. There are no minimum or maximum quantities assumed for each individual project. Contractor's bid shall account for this. Contractor shall furnish all materials, equipment, labor, and services that may be required for each individual project. All material and parts provided by Contractor shall be new.

The Contractor agrees to cooperate and work with all Broward County divisions in scheduling work requested. The Contractor will be notified approximately ten (10) calendar days in advance of start date of a project, except during emergencies. The Contractor will be notified of completion dates prior to the project start date.

The work embraced in this Contract shall commence only when sufficient material, equipment, personnel, and other necessities are available; consequently, it can be carried out regularly, uninterrupted, and completed without delay. The Contractor is responsible for estimation of all materials necessary for completion of any project designated by the County.

The successful bidder will be required to obtain an annual PERMIT OF RECORD from the Broward County Engineering Division (no fee/no additional security required) to cover all work performed within County jurisdiction Rights-of-Ways as a result of being awarded this contract.

1. Project Manual for Individual Projects

1.1. The Project Manual shall include any general or special conditions or specifications.

1.2. The Project Manual, along with all documents that make up and constitute the Project Manual scope and requirements of any individual project, shall be followed in strict accordance as to work, performance, material, and dimensions except when COUNTY PROJECT MANAGER may authorize, in writing, an exception.

1.3. Dimensions given in figures are to hold preference over scaled measurements from the drawings; however, all discrepancies shall be resolved by COUNTY PROJECT MANAGER. CONTRACTOR shall not proceed when in doubt as to any dimension or measurement, but shall seek clarification from COUNTY PROJECT MANAGER.

2. Intention of COUNTY

It is the intent of COUNTY to describe in the Project Manual a functionally complete Project (or part thereof) to be constructed in accordance with the Project Manual and in accordance with all codes and regulations governing construction of the Project. Any work, materials or equipment that may reasonably be inferred from the Project Manual as being required to produce the intended result shall be supplied by CONTRACTOR whether or not specifically called for. When words which have a well-known technical or trade meaning are used to describe work, materials or equipment, such words shall be interpreted in accordance with that meaning. Reference to standard specifications, manuals, or codes of any technical society, organization or association, or to the laws or regulations of any governmental authority, whether such reference be specific or by implication, shall mean the latest standard specification, manual, code or laws or regulations in effect at the time of opening of bids and CONTRACTOR shall comply therewith. COUNTY shall have no duties other than those duties and obligations expressly set forth within the Contract Documents.

3. Preliminary Matters

At a time specified by COUNTY PROJECT MANAGER and before CONTRACTOR starts the work at the Project site, a conference attended by CONTRACTOR, COUNTY PROJECT MANAGER and others as deemed appropriate by COUNTY PROJECT MANAGER, will be held to discuss project schedule, procedures for handling Shop Drawings, project submittals and Applications for Payment, and to establish a working understanding among the parties as to the Work.

4. Labor and Materials

4.1. Unless otherwise provided herein, CONTRACTOR shall provide and pay for all materials, labor, water, tools, equipment, light, power, transportation and other facilities and services necessary for the proper execution and completion of the Work, whether temporary or permanent and whether or not incorporated or to be incorporated in the Work.

4.2. CONTRACTOR shall at all times enforce strict discipline and good order among its employees and subcontractors at the Project site and shall not employ on the Project any unfit person or anyone not skilled in the Work to which they are assigned.

5. Royalties and Patents

All fees, royalties, and claims for any invention, or pretended inventions, or patent of any article, material, arrangement, appliance, or method that may be used upon or in any manner be connected with the construction of the Work or appurtenances, are hereby included in the prices stipulated in this Contract for said Work.

6. Weather

Extensions to the Contract Time for delays caused by the effects of inclement weather shall be submitted as a request for a change in the Contract Time. These time extensions are justified only when rains or other inclement weather conditions or related adverse soil conditions prevent CONTRACTOR from productively performing controlling items of work identified on the accepted schedule or updates resulting in:

(1) CONTRACTOR being unable to work at least fifty percent (50%) of the normal workday on controlling items of work identified on the accepted schedule or updates due to adverse weather conditions; or

(2) CONTRACTOR must make major repairs to the Work damaged by weather. Providing the damage was not attributable to a failure to perform or neglect by CONTRACTOR, and providing that CONTRACTOR was unable to work at least fifty percent (50%) of the normal workday on controlling items of work identified on the accepted schedule or updates.

7. Permits, Licenses and Impact Fees

7.1. All permits and licenses required by federal, state or local laws, rules and regulations necessary for the prosecution of the Work undertaken by CONTRACTOR pursuant to this Contract shall be secured and paid for by CONTRACTOR. CONTRACTOR shall be reimbursed only for the actual amount of the permit and/or licenses fee(s) as evidenced by an invoice or other acceptable documentation issued by the permitting agency. It is CONTRACTOR's responsibility to have and maintain appropriate Certificate(s) of Competency, valid for the Work to be performed and valid for the jurisdiction in which the Work is to be performed for all persons working on the Project for whom a Certificate of Competency is required.

7.2. Impact fees levied by any municipality shall be paid by CONTRACTOR. CONTRACTOR shall be reimbursed only for the actual amount of the impact fee levied by the municipality as evidenced by an invoice or other acceptable documentation issued by the municipality. Reimbursement to CONTRACTOR in no event shall include profit or overhead of CONTRACTOR.

8. Resolution of Disputes

8.1. To prevent all disputes and litigation, it is agreed by the parties hereto that COUNTY PROJECT MANAGER shall decide all questions, claims, difficulties and disputes of whatever nature which may arise relative to the technical interpretation of the Project Manual and fulfillment of the Projects as to the character, quality, amount and value of any work done and materials furnished, or proposed to be done or furnished under or, by reason of, the Contract Documents and COUNTY PROJECT MANAGER's estimates and decisions upon all claims, questions, difficulties and disputes shall be final and binding to the extent provided in Section 8.2. All non-technical administrative disputes shall be determined by the CONTRACT ADMINISTRATOR. During the pendency of any dispute and after a determination thereof, CONTRACTOR and COUNTY PROJECT MANAGER shall act in good faith to mitigate any potential damages including utilization of construction schedule changes and alternate means of construction.

8.2. In the event the determination of a dispute under this Article is unacceptable to either party hereto, the party objecting to the determination must notify the other party in writing within ten (10) days of receipt of the written determination. The notice must state the basis of the objection and must be accompanied by a statement that any Contract Price adjustment claimed is the entire adjustment to which the objecting party has reason to believe it is entitled to as a result of the determination. Within sixty (60) days after Final Completion of the Work, the parties shall participate in mediation to address all objections to any

determinations hereunder and to attempt to prevent litigation. The mediator shall be mutually agreed upon by the parties. Should any objection not be resolved in mediation, the parties retain all their legal rights and remedies provided under State law. A party objecting to a determination specifically waives all of its rights provided hereunder, including its rights and remedies under State law, if said party fails to comply in strict accordance with the requirements of this Article.

9. Inspection of Work

9.1. COUNTY personnel shall at all times have access to the Work, and CONTRACTOR shall provide proper facilities for such access and for inspecting, measuring and testing.

9.1.1. Should the Project Manual, COUNTY PROJECT MANAGER's instructions, any laws, ordinances, or any public authority require any of the Work to be specially tested or approved, CONTRACTOR shall give COUNTY PROJECT MANAGER timely notice of readiness of the Work for testing. If the testing or approval is to be made by an authority other than COUNTY, timely notice shall be given of the date fixed for such testing. Testing shall be made promptly, and, where practicable, at the source of supply. If any of the Work should be covered up without approval or consent of COUNTY PROJECT MANAGER, it must, if required by COUNTY PROJECT MANAGER, be uncovered for examination and properly restored at CONTRACTOR's expense.

9.1.2. Reexamination of any of the Work may be ordered by COUNTY PROJECT MANAGER with prior written approval by the CONTRACT ADMINISTRATOR, and if so ordered, the Work must be uncovered by CONTRACTOR. If such Work is found to be in accordance with the Contract Documents, COUNTY shall pay the cost of reexamination and replacement. If such Work is not in accordance with the Project Manual, CONTRACTOR shall pay such cost.

9.2. Inspectors shall have no authority to permit deviations from, nor to relax any of the provisions of, the Project Manual nor to delay the Contract by failure to inspect the materials and work with reasonable promptness without the written permission or instruction of COUNTY PROJECT MANAGER.

9.3. The payment of any compensation, whatever may be its character or form, or the giving of any gratuity or the granting of any favor by CONTRACTOR to any inspector, directly or indirectly, is strictly prohibited, and any such act on the part of CONTRACTOR will constitute a breach of this Contract.

10. Superintendence and Supervision

10.1. The orders of COUNTY are to be given through COUNTY PROJECT MANAGER, which instructions are to be strictly and promptly followed in every case. CONTRACTOR shall keep on the Project during its progress, a full-time competent English speaking superintendent and any necessary assistants, all satisfactory to COUNTY PROJECT MANAGER. The superintendent shall not be changed except with the written consent of COUNTY PROJECT MANAGER, unless the superintendent proves to be unsatisfactory to CONTRACTOR and ceases to be in its employ. The superintendent shall represent CONTRACTOR and all directions given to the superintendent shall be as binding as if given to CONTRACTOR and will be confirmed in writing by COUNTY PROJECT MANAGER upon the written request of CONTRACTOR. CONTRACTOR shall give efficient supervision to the Work, using its best skill and attention.

10.2. Daily, CONTRACTOR's superintendent shall record, at a minimum, the following information in a bound log: the day; date; weather conditions and how any weather condition affected progress of the Work; time of commencement of Work for the day; the

work being performed; materials, labor, personnel, equipment and subcontractors at the Project site; visitors to the Project site, including representatives of COUNTY, regulatory representatives; any special or unusual conditions or occurrences encountered; and the time of termination of Work for the day. All information shall be recorded in the daily log in ink. The daily log shall be kept on the Project site and shall be available at all times for inspection and copying by COUNTY.

10.3. The CONTRACTOR and COUNTY PROJECT MANAGER shall meet at least every two (2) weeks or as determined by the CONTRACT ADMINISTRATOR, during the course of the Work to review and agree upon the Work performed to date and to establish the controlling items of Work for the next two (2) weeks. The COUNTY PROJECT MANAGER shall publish, keep, and distribute minutes and any comments thereto of each such meeting.

10.4. If CONTRACTOR, in the course of prosecuting the Work, finds any discrepancy between the Project Manual and the physical conditions of the locality, or any errors, omissions, or discrepancies in the Project Manual, it shall be CONTRACTOR's duty to immediately inform COUNTY PROJECT MANAGER, in writing, and COUNTY PROJECT MANAGER will promptly review the same. Any Work done after such discovery, until authorized, will be done at CONTRACTOR's sole risk.

10.5. CONTRACTOR shall supervise and direct the Work competently and efficiently, devoting such attention thereto and applying such skills and expertise as may be necessary to perform the Work in accordance with the Project Manual. CONTRACTOR shall be solely responsible for the means, methods, techniques, sequences and procedures of construction.

11. Rights of Various Interests:

Whenever work being done by COUNTY's forces or by other contractors is contiguous to or within the limits of work covered by this Contract, the respective rights of the various interests involved shall be established by the CONTRACT ADMINISTRATOR to secure the completion of the various portions of the work in general harmony.

12. Explosives:

When the use of explosives is necessary in the prosecution of the work, CONTRACTOR shall exercise the utmost care in handling and usage of such explosives to the protection of life and property. All explosives shall be stored in a safe manner and storage places shall be clearly marked "Dangerous-Explosives" and placed in the care of competent watchmen. When such use of explosives becomes necessary, CONTRACTOR shall furnish to COUNTY proof of coverage, adequately providing public liability and property damage insurance as a rider attached to its regular policies, unless otherwise included.

13. Differing Site Conditions:

In the event that during the course of the Work CONTRACTOR encounters subsurface or concealed conditions at the Project site which differ materially from those shown on the Project Manual and from those ordinarily encountered and generally recognized as inherent in work of the character called for in the Contract Documents; or unknown physical conditions of the Project site, of an unusual nature, which differ materially from that ordinarily encountered and generally recognized as inherent in work of the character called for in the Contract Documents, CONTRACTOR, without disturbing the conditions and before performing any work affected by such conditions, shall, within twenty-four (24) hours of their discovery, notify COUNTY PROJECT MANAGER in writing of the existence of the aforesaid conditions. COUNTY PROJECT MANAGER shall, within two (2) business days after receipt of CONTRACTOR's written notice, investigate the site conditions identified by CONTRACTOR. If, in the sole opinion of COUNTY PROJECT MANAGER, the conditions do materially so differ and cause an increase or decrease in

CONTRACTOR's cost of, or the time required for, the performance of any part of the Work, whether or not charged as a result of the conditions, CONTRACTOR shall provide revised estimate including adjustment to the Contract Price, or the Contract Time, or both for COUNTY PROJECT MANAGER approval. If COUNTY PROJECT MANAGER and CONTRACTOR cannot agree on an adjustment in the Contract Price or Contract Time, the adjustment shall be referred to CONTRACT ADMINISTRATOR for final determination. Should CONTRACT ADMINISTRATOR determine that the conditions of the Project site are not so materially different to justify a change in the terms of the Contract, CONTRACT ADMINISTRATOR shall so notify CONTRACTOR in writing, stating the reasons, and such determination shall be final and binding upon the parties hereto.

No request by CONTRACTOR for an equitable adjustment to the Contract under this provision shall be allowed unless CONTRACTOR has given written notice in strict accordance with the provisions of this Article.

No request for an equitable adjustment or change to the Project's price or project time for differing site conditions shall be allowed if made after the date certified by CONTRACT ADMINISTRATOR as the date of substantial completion.

14. Plans and Working Drawing

COUNTY shall have the right to modify the details of the plans and specifications, to supplement the plans and specifications with additional plans, drawings or additional information as the Work proceeds, all of which shall be considered as part of the Project Manual. In case of disagreement between the written and graphic portions of the Project Manual, the written portion shall govern.

15. CONTRACTOR to Check Plans, Specifications and Data

CONTRACTOR shall verify all dimensions, quantities and details shown on the plans, specifications or other data received from COUNTY PROJECT MANAGER, and shall notify COUNTY PROJECT MANAGER of all errors, omissions and discrepancies found therein within three (3) calendar days of discovery. CONTRACTOR will not be allowed to take advantage of any error, omission or discrepancy, as full instructions will be furnished by COUNTY PROJECT MANAGER. CONTRACTOR shall not be liable for damages resulting from errors, omissions or discrepancies in the Project Manual unless CONTRACTOR recognized such error, omission or discrepancy and knowingly failed to report it to COUNTY PROJECT MANAGER.

16. CONTRACTOR's Responsibility for Damages and Accidents

16.1. CONTRACTOR shall accept full responsibility for the Work against all loss or damage of whatsoever nature sustained until final acceptance by COUNTY, and shall promptly repair any damage done from any cause whatsoever.

16.2. CONTRACTOR shall be responsible for all materials, equipment and supplies pertaining to the Project. In the event any such materials, equipment and supplies are lost, stolen, damaged or destroyed prior to final acceptance by COUNTY, CONTRACTOR shall replace same without cost to COUNTY.

17. Warranty

CONTRACTOR warrants to COUNTY that all materials and equipment furnished under this Contract will be new unless otherwise specified and that all of the Work will be of good quality, free from faults and defects and in conformance with the Project Manual. All work not conforming to these requirements, including substitutions not properly approved and authorized, may be considered defective. If required by COUNTY PROJECT MANAGER, CONTRACTOR shall furnish satisfactory evidence as to the kind and quality of materials and equipment.

18. Supplementary Drawings:

18.1. When, in the opinion of COUNTY PROJECT MANAGER, it becomes necessary to explain the Work to be done more fully, or to illustrate the Work further, or to show any changes which may be required, supplementary drawings, with specifications pertaining thereto, will be prepared by COUNTY PROJECT MANAGER.

18.2. The supplementary drawings shall be binding upon CONTRACTOR with the same force as the Project Manual. Where such supplementary drawings require either less or more than the original quantities of work, appropriate adjustments shall be made.

19. Defective Work:

19.1. COUNTY PROJECT MANAGER shall have the authority to reject or disapprove work which COUNTY PROJECT MANAGER finds to be defective. If required by COUNTY PROJECT MANAGER, CONTRACTOR shall promptly either correct all defective work or remove such defective work and replace it with non-defective work. CONTRACTOR shall bear all direct, indirect and consequential costs of such removal or corrections including cost of testing laboratories and personnel.

19.2. Should CONTRACTOR fail or refuse to remove or correct any defective work or to make any necessary repairs in accordance with the requirements of the Project Manual within the time indicated in writing by COUNTY PROJECT MANAGER, CONTRACT ADMINISTRATOR shall have the authority to cause the defective work to be removed or corrected, or make such repairs as may be necessary at CONTRACTOR's expense. Any expense incurred by COUNTY in making such removals, corrections or repairs, shall be paid for out of any monies due or which may become due to CONTRACTOR, or may be charged against the Performance Bond. In the event of failure of CONTRACTOR to make all necessary repairs promptly and fully, COUNTY may declare CONTRACTOR in default.

19.3. If, within one (1) year after the date of substantial completion or such longer period of time as may be prescribed by the terms of any applicable special warranty required by the Project Manual, or by any specific provision of the Project Manual, any of the Work is found to be defective or not in accordance with the Contract Documents, CONTRACTOR, after receipt of written notice from COUNTY, shall promptly correct such defective or nonconforming Work within the time specified by COUNTY without cost to COUNTY, to do so. Nothing contained herein shall be construed to establish a period of limitation with respect to any other obligation which CONTRACTOR might have under the Project Manual.

19.4. Failure to reject any defective work or material shall not in any way prevent later rejection when such defect is discovered, or obligate COUNTY to final acceptance.

20. Taxes

CONTRACTOR shall pay all applicable sales, consumer, use and other taxes required by law. CONTRACTOR is responsible for reviewing the pertinent state statutes involving state taxes and complying with all requirements.

21. Subcontracts

21.1. Each subcontractor must possess certificates of competency and licenses required by law. CONTRACTOR shall have a continuing obligation to notify COUNTY PROJECT MANAGER of any change in subcontractors.

21.2. CONTRACTOR shall not employ any subcontractor against whom COUNTY may have a reasonable objection. CONTRACTOR shall not be required to employ any subcontractor against whom CONTRACTOR has a reasonable objection.

21.3. CONTRACTOR shall be fully responsible for all acts and omissions of its subcontractors and of persons directly or indirectly employed by its subcontractors and of persons for whose acts any of them may be liable to the same extent that CONTRACTOR is responsible for the acts and omissions of persons directly employed by it. Nothing in the Project Manual shall create any contractual relationship between any subcontractor and COUNTY or any obligation on the part of COUNTY to pay or to see the payment of any monies due to any subcontractor. COUNTY may furnish to any subcontractor evidence of amounts paid to CONTRACTOR on account of specific work performed.

21.4. CONTRACTOR agrees to bind specifically every subcontractor to the applicable terms and conditions of the Project Manual for the benefit of COUNTY.

22. Separate Contracts

22.1. COUNTY reserves the right to let other contracts in connection with this Project. CONTRACTOR shall afford other persons reasonable opportunity for the introduction and storage of their materials and the execution of their work and shall properly connect and coordinate this Work with theirs.

22.2. If any part of CONTRACTOR's Work depends for proper execution or results upon the work of any other persons, CONTRACTOR shall inspect and promptly report to COUNTY PROJECT MANAGER any defects in such work that render it unsuitable for such proper execution and results. CONTRACTOR's failure to so inspect and report shall constitute an acceptance of the other person's work as fit and proper for the reception of CONTRACTOR's Work, except as to defects which may develop in other contractor's work after the execution of CONTRACTOR's.

22.3. CONTRACTOR shall conduct its operations and take all reasonable steps to coordinate the prosecution of the Work so as to create no interference or impact on any other contractor on the site. Should such interference or impact occur, CONTRACTOR shall be liable to the affected contractor for the cost of such interference or impact.

22.4. To insure the proper execution of subsequent work, CONTRACTOR shall inspect the work already in place and shall at once report to COUNTY PROJECT MANAGER any discrepancy between the executed work and the requirements of the Project Manual.

23. Use of Completed Portions

23.1. COUNTY shall have the right at its sole option to take possession of and use any completed or partially completed portions of the Project. Such possession and use shall not be deemed an acceptance of any of the Work not completed in accordance with the Project Manual. If such possession and use increases the cost of or delays the Work, CONTRACTOR shall be entitled to reasonable extra compensation or reasonable extension of time or both, as approved by COUNTY PROJECT MANAGER.

23.2. In the event COUNTY takes possession of any completed or partially completed portions of the Project, the following shall occur:

23.2.1. COUNTY shall give notice to CONTRACTOR in writing at least thirty (30) calendar days prior to COUNTY's intended occupancy of a designated area.

23.2.2. CONTRACTOR shall complete to the point of Substantial Completion the designated area and request inspection and issuance of a Certificate of Substantial Completion.

23.2.3. Upon COUNTY PROJECT MANAGER's issuance of a Certificate of Substantial Completion, COUNTY will assume full responsibility for maintenance, utilities, subsequent damages of COUNTY and public, adjustment of insurance coverages

and start of warranty for the occupied area.

23.2.4. CONTRACTOR shall complete all items noted on the Certificate of Substantial Completion within the time specified by COUNTY PROJECT MANAGER on the Certificate of Substantial Completion, as soon as possible and request final inspection and final acceptance of the portion of the Work occupied. Upon completion of final inspection and receipt of an application for final payment, COUNTY PROJECT MANAGER shall issue a Final Certificate of Payment relative to the occupied area.

23.2.5. If COUNTY finds it necessary to occupy or use a portion or portions of the Work prior to Substantial Completion thereof, such occupancy or use shall not commence prior to a time mutually agreed upon by COUNTY and CONTRACTOR and to which the insurance company or companies providing the property insurance have consented by endorsement to the policy or policies. Insurance on the unoccupied or unused portion or portions shall not be canceled or lapsed on account of such partial occupancy or use. Consent of CONTRACTOR and of the insurance company or companies to such occupancy or use shall not be unreasonably withheld.

24. Lands for Work

24.1. COUNTY shall provide, as may be indicated in the Project Manual, the lands upon which the Work is to be performed, rights-of-way and easements for access thereto and such other lands as are designated by COUNTY for the use of CONTRACTOR.

24.2. CONTRACTOR shall provide, at CONTRACTOR's own expense and without liability to COUNTY, any additional land and access thereto that may be required for temporary construction facilities, or for storage of materials. CONTRACTOR shall furnish to COUNTY copies of written permission obtained by CONTRACTOR from the owners of such land.

25. Legal Restrictions and Traffic Provisions

CONTRACTOR shall conform to and obey all applicable laws, regulations, or ordinances with regard to labor employed, hours of work and CONTRACTOR's general operations. CONTRACTOR shall conduct its operations so as not to close any thoroughfare, nor interfere in any way with traffic on railway, highways, or water, without the written consent of the proper authorities.

26. Location and Damage to Existing Facilities, Equipment or Utilities

26.1. As far as possible, all existing utility lines in the Project area have been shown on the plans. However, COUNTY does not guarantee that all lines are shown, or that the ones indicated are in their true location. It shall be the CONTRACTOR'S responsibility to identify and locate all underground and overhead utility lines or equipment affecting or affected by the Project. No additional payment will be made to the CONTRACTOR because of discrepancies in actual and plan location of utilities, and additional costs suffered as a result thereof.

26.2. The CONTRACTOR shall notify each utility company involved prior to the start of construction to arrange for positive underground location, relocation or support of its utility where that utility may be in conflict with or endangered by the proposed construction. Relocation of water mains or other utilities for the convenience of the CONTRACTOR shall be paid by the CONTRACTOR. All charges by utility companies for temporary support of its utilities shall be paid for by the CONTRACTOR. All costs of permanent utility relocation to avoid conflict shall be the responsibility of the utility company involved. No additional payment will be made to the CONTRACTOR for utility relocations, whether or not said relocation is necessary to avoid conflict with other lines.

26.3. The CONTRACTOR shall schedule the work in such a manner that the work is not delayed by the utility providers relocating or supporting their utilities. The CONTRACTOR shall coordinate its activities with any and all public and private utility providers occupying the right-of-way. No compensation will be paid to the CONTRACTOR for any loss of time or delay.

26.4. All overhead, surface or underground structures and utilities encountered are to be carefully protected from injury or displacement. All damage to such structures is to be completely repaired within a reasonable time; needless delay will not be tolerated. The COUNTY reserves the right to remedy such damage by ordering outside parties to make such repairs at the expense of the CONTRACTOR. All such repairs made by the CONTRACTOR are to be made to the satisfaction of the utility owner. All damaged utilities must be replaced or fully repaired. All repairs are to be inspected by the utility owner prior to backfilling.

27. Continuing the Work

CONTRACTOR shall carry on the Work and adhere to the progress schedule during all disputes or disagreements with COUNTY. The Work shall not be delayed or postponed pending resolution of any disputes or disagreements.

28. Field Orders and Supplemental Instructions

28.1. The COUNTY PROJECT MANAGER shall have the right to approve and issue Field Orders setting forth written interpretations of the intent of the Project Manual and ordering minor changes in Work execution, providing the Field Order involves no change in the Project price or the project time.

28.2. COUNTY PROJECT MANAGER shall have the right to approve and issue Supplemental Instructions setting forth written orders, instructions, or interpretations concerning the Project Manual or its performance, provided such Supplemental Instructions involve no change in the Project price or the Project time.

29. Notification and Claim for Change of Project Time or Project Price

29.1. Any claim for a change in the Project time or Project price shall be made by written notice by CONTRACTOR to the COUNTY PROJECT MANAGER within five (5) calendar days of the commencement of the event giving rise to the claim and stating the general nature and cause of the claim. Thereafter, within seven (7) calendar days of the termination of the event giving rise to the claim, written notice of the extent of the claim with supporting information and documentation shall be provided unless COUNTY PROJECT MANAGER allows an additional period of time to ascertain more accurate data in support of the claim and such notice shall be accompanied by CONTRACTOR's written statement that the adjustment claimed is the entire adjustment to which the CONTRACTOR has reason to believe it is entitled as a result of the occurrence of said event. All claims for changes in the Project time or Project price shall be determined by CONTRACT ADMINISTRATOR in accordance with Article 13 hereof, if COUNTY PROJECT MANAGER and CONTRACTOR cannot otherwise agree. IT IS EXPRESSLY AND SPECIFICALLY AGREED THAT ANY AND ALL CLAIMS FOR CHANGES TO THE PROJECT TIME OR PROJECT PRICE SHALL BE WAIVED IF NOT SUBMITTED IN STRICT ACCORDANCE WITH THE REQUIREMENTS OF THIS SECTION.

29.2. The Project's time will be extended in an amount equal to time lost on critical Work items due to delays beyond the control of and through no fault or negligence of CONTRACTOR if a claim is made therefor as provided in Section 29.1. Such delays shall include, but not be limited to, acts or neglect by any separate contractor employed by COUNTY, fires, floods, labor disputes, epidemics, abnormal weather conditions or acts of God.

30. No Damages for Delay

No claim for damages or any claim, other than for an extension of time, shall be made or asserted against COUNTY by reason of any delays except as provided herein. CONTRACTOR shall not be entitled to an increase in the Project's price or payment or compensation of any kind from COUNTY for direct, indirect, consequential, impact or other costs, expenses or damages, including but not limited to costs of acceleration or inefficiency, arising because of delay, disruption, interference or hindrance from any cause whatsoever, whether such delay, disruption, interference or hindrance be reasonable or unreasonable, foreseeable or unforeseeable, or avoidable or unavoidable; provided, however, that this provision shall not preclude recovery of damages by CONTRACTOR for actual delays due solely to fraud, bad faith or active interference on the part of COUNTY. Otherwise, CONTRACTOR shall be entitled only to extensions of the Contract Time as the sole and exclusive remedy for such resulting delay, in accordance with and to the extent specifically provided above.

31. Excusable Delay

Excusable Delay. Delay which extends the completion of the Work and which is caused by circumstances beyond the control of CONTRACTOR or its subcontractors, suppliers or vendors are Excusable Delay.

CONTRACTOR is entitled to a time extension of the Project's time for each day the Work is delayed due to Excusable Delay. CONTRACTOR shall document its claim for any time extension as provided in Article 29 hereof.

Failure of CONTRACTOR to comply with Article 29 hereof as to any particular event of delay shall be deemed conclusively to constitute a waiver, abandonment or relinquishment of any and all claims resulting from that particular event of delay.

32. Substantial Completion:

When CONTRACTOR considers that the Work, or a portion thereof designated by COUNTY pursuant to Article 23 hereof, has reached Substantial Completion, CONTRACTOR shall so notify COUNTY in writing. COUNTY shall then promptly inspect the Work. When COUNTY PROJECT MANAGER, on the basis of such an inspection, determines that the Work or designated portion thereof is substantially complete, it will then prepare a Certificate of Substantial Completion. The COUNTY shall affix its determination to the Certificate of Substantial Completion which shall establish the Date of Substantial Completion. The Certificate of Substantial Completion shall state the responsibilities of COUNTY and CONTRACTOR for security, maintenance, heat, utilities, damage to the Work, and insurance; and shall list all Work yet to be completed to satisfy the requirements of the Project Manual for Final Completion and to make the Work satisfactory and acceptable. The failure to include any items of corrective work on such list does not alter the responsibility of CONTRACTOR to complete all of the Work in accordance with the Contract Documents. Warranties required by the Project Manual shall commence on the date of Substantial Completion of the Work or designated portion thereof unless otherwise provided in the Certificate of Substantial Completion. The Certificate of Substantial Completion shall be submitted to CONTRACTOR for their written acceptance of the responsibilities assigned to them in such Certificate.

33. No Interest

Any monies not paid by COUNTY when claimed to be due to CONTRACTOR under this Agreement, including, but not limited to, any and all claims for contract damages of any type, shall not be subject to interest including, but not limited to prejudgment interest. However, the provisions of COUNTY's prompt payment ordinance, as such relates to timeliness of payment, and the provisions of Section 218.74(4), Florida Statutes as such relates to the payment of interest, shall apply to valid and proper invoices.

34. Shop Drawings

34.1. CONTRACTOR shall submit Shop Drawings as required by the Technical Specifications. The purpose of the Shop Drawings is to show the suitability, efficiency, technique of manufacture, installation requirements, details of the item and evidence of its compliance or noncompliance with the Contract Documents.

34.2. CONTRACTOR shall thoroughly review and check the Shop Drawings and each and every copy shall show this approval thereon.

34.3. If the Shop Drawings show or indicate departures from the Contract requirements, CONTRACTOR shall make specific mention thereof in its letter of transmittal. Failure to point out such departures shall not relieve CONTRACTOR from its responsibility to comply with the Project Manual.

34.4. COUNTY PROJECT MANAGER shall review and approve or reject Shop Drawings within fifteen (15) calendar days from the date received. COUNTY PROJECT MANAGER's approval of Shop Drawings will be general and shall not relieve CONTRACTOR of responsibility for the accuracy of such Drawings, nor for the proper fitting and construction of the work, nor for the furnishing of materials or work required by the Contract Documents and not indicated on the Drawings. No work called for by Shop Drawings shall be performed until the said Drawings have been approved by COUNTY PROJECT MANAGER. Approval shall not relieve CONTRACTOR from responsibility for errors or omissions of any sort on the Shop Drawings.

34.5. No approval will be given to partial submittals of Shop Drawings for items which interconnect and/or are interdependent where necessary to properly evaluate the design. It is CONTRACTOR's responsibility to assemble the Shop Drawings for all such interconnecting and/or interdependent items, check them and then make one submittal to COUNTY along with its comments as to compliance, noncompliance, or features requiring special attention.

34.6. If catalog sheets or prints of manufacturers' standard drawings are submitted as Shop Drawings, any additional information or changes on such drawings shall be typewritten or lettered in ink.

34.7. CONTRACTOR shall submit the number of copies required by COUNTY PROJECT MANAGER. Resubmissions of Shop Drawings shall be made in the same quantity until final approval is obtained.

34.8. CONTRACTOR shall keep one set of Shop Drawings marked with COUNTY PROJECT MANAGER approval at the job site at all times.

35. Field Layout of the Work and Record Drawings

35.1. The entire responsibility for establishing and maintaining line and grade in the field lies with CONTRACTOR. When COUNTY PROJECT MANAGER requires record drawings, CONTRACTOR shall maintain an accurate and precise record of the location and elevation of all pipe lines, conduits, structures, maintenance access structures, handholes, fittings and the like and shall prepare record or "as-built" drawings of the same which are sealed by a Professional Surveyor. CONTRACTOR shall deliver these records in good order to COUNTY PROJECT MANAGER as the Work is completed. All record drawings shall be made on reproducible paper and shall be delivered to COUNTY PROJECT MANAGER prior to, and as a condition of, final payment.

35.2. CONTRACTOR shall maintain in a safe place at the Project site one record copy of all Drawings, Plans, Specifications, Addenda, written amendments, Field Orders and written interpretations and clarifications in good order and annotated to show all changes made

during construction. These record documents together with all approved samples and a counterpart of all approved Shop Drawings shall be available at all times to COUNTY PROJECT MANAGER for reference. Upon Final Completion of the Project and prior to Final Payment, these record documents, samples and Shop Drawings shall be delivered to the CONTRACT ADMINISTRATOR.

36. Safety and Protection

36.1. CONTRACTOR shall be solely responsible for initiating, maintaining and supervising all safety precautions and programs in connection with the Project. CONTRACTOR shall take all necessary precautions for the safety of, and shall provide the necessary protection to prevent damage, injury or loss to:

36.1.1. All employees on the work site and other persons who may be affected thereby;

36.1.2. All the work and all materials or equipment to be incorporated therein, whether in storage on or off the Project site; and

36.1.3. Other property at the Project site or adjacent thereto, including trees, shrubs, lawns, walks, pavements, roadways, structures and utilities not designated for removal, relocation or replacement in the course of construction.

36.2. CONTRACTOR shall comply with all applicable laws, ordinances, rules, regulations and orders of any public body having jurisdiction for the safety of persons or property or to protect them from damage, injury or loss; and shall erect and maintain all necessary safeguards for such safety and protection. CONTRACTOR shall notify owners of adjacent property and utilities when prosecution of the work may affect them. All damage, injury or loss to any property caused directly or indirectly, in whole or in part, by CONTRACTOR, any Subcontractor or anyone directly or indirectly employed by any of them or anyone for whose acts any of them may be liable, shall be remedied by CONTRACTOR. CONTRACTOR's duties and responsibilities for the safety and protection of the work shall continue until such time as all the Work is completed and acceptable.

36.3. CONTRACTOR shall designate a responsible member of its organization at the Work site whose duty shall be the prevention of accidents. This person shall be CONTRACTOR'S superintendent unless otherwise designated in writing by CONTRACTOR to COUNTY.

37. Final Bill of Materials

CONTRACTOR shall be required to submit to COUNTY PROJECT MANAGER a final bill of materials with unit costs for each bid item for supply of materials in place. This shall be an itemized list of all materials with a unit cost for each material and the total shall agree with unit costs established for each Contract item. A Final Certificate for Payment cannot be issued by COUNTY until CONTRACTOR submits the final bill of materials and COUNTY verifies the accuracy of the units of Work.

38. Payment by COUNTY for Tests

Except when otherwise specified in the Project Manual, the expense of all tests requested by COUNTY shall be borne by COUNTY and performed by a testing firm chosen by COUNTY. For road construction projects the procedure for making tests required by COUNTY will be in conformance with the most recent edition of the State of Florida, Department of Transportation Standard Specifications for Road and Bridge Construction. The cost of any required test which CONTRACTOR fails shall be paid for by CONTRACTOR.

39. Project Sign

Any requirements for a project sign shall be as set forth within the Technical Specifications section.

40. Hurricane Precautions

40.1. During such periods of time as are designated by the United States Weather Bureau as being a hurricane warning or alert, the CONTRACTOR, at no cost to the COUNTY, shall take all precautions necessary to secure the Project site in response to all threatened storm events, regardless of whether the COUNTY PROJECT MANAGER has given notice of same.

40.2. Compliance with any specific hurricane warning or alert precautions will not constitute additional work.

40.3. Suspension of the Work caused by a threatened or actual storm event, regardless of whether the COUNTY has directed such suspension, will entitle the CONTRACTOR to additional Contract Time as non-compensable, excusable delay, and shall not give rise to a claim for compensable delay.

41. Cleaning Up; COUNTY's Right to Clean Up

CONTRACTOR shall at all times keep the premises free from accumulation of waste materials or rubbish caused by its operations. At the completion of the Project, CONTRACTOR shall remove all its waste materials and rubbish from and about the Project as well as its tools, construction equipment, machinery and surplus materials. If CONTRACTOR fails to clean up during the prosecution of the Work or at the completion of the Work, COUNTY may do so and the cost thereof shall be charged to CONTRACTOR. If a dispute arises between CONTRACTOR and separate contractors as to their responsibility for cleaning up, COUNTY may clean up and charge the cost thereof to the contractors responsible therefore as COUNTY PROJECT MANAGER shall determine to be just.

42. Removal of Equipment

In case of termination of this Contract before completion for any cause whatever, CONTRACTOR, if notified to do so by COUNTY, shall promptly remove any part or all of CONTRACTOR's equipment and supplies from the property of COUNTY, failing which COUNTY shall have the right to remove such equipment and supplies at the expense of CONTRACTOR.

43. Project Records

CONTRACTOR shall maintain all books and records and accounts, whether financial or otherwise, which relate to the Project and to any claim for additional compensation made by CONTRACTOR, including, without limitation, complete and correct records of payments to each of its subcontractors. For each subcontractor, the books and records and accounts shall reflect each payment to the subcontractor and the cumulative total of the payments made to the subcontractor. COUNTY shall have the right to inspect and copy, at COUNTY's expense, the books and records and accounts of CONTRACTOR which relate in any way to the Project, and to any claim for additional compensation made by CONTRACTOR, and to conduct an audit of the financial and accounting records of CONTRACTOR which relate to the Project and to any claim for additional compensation made by CONTRACTOR. CONTRACTOR shall retain and make available to COUNTY all such books and records and accounts, whether financial or otherwise, which relate to the Project and to any claim for a period of three (3) years following Final Completion of the Project. During the Project and the three (3) year period following Final Completion of the Project, CONTRACTOR shall provide COUNTY access to its books and records and accounts upon seventy-two (72) hours written notice.

2. PAY ITEMS DESCRIPTION

1. FDOT pay item description can be found at FDOT Basis of Estimate Manual http://www.dot.state.fl.us/specificationsoffice/Estimates/BasisofEstimates/BOEManual/BOEOnline.shtm . Only exceptions described herein are applicable to the scope of work for this contract. Specifications of pay items not associated with a FDOT pay item are also described in this section.

2. If a job activity can be paid through multiple pay items, only one pay item must be used. In this case, the Contract Administrator or his designee will select appropriated pay item to pay for the work.

ABBREVIATIONS
Listed below are selected abbreviations used in the pay items.

Table 1: Abbreviations	
ABBREVIATION	**DESCRIPTION**
AC	Acre
ACI	American Concrete Institute
ADA	Americans with Disabilities Act
ANSI	American National Standards Institute, Inc.
APL	Approve Product List
AS	Assembly
ASTM	American Society for Testing and Materials
ASCE	American Society of Civil Engineers
AVG	Average
CADD	Computer-Aided Design and Drafting
CF	Cubic Feet
CY	Cubic Yard
EA	Each
ED	Each Day
FDOT	Florida Department of Transportation
FT	Foot
F&I	Furnish and Install
GAL	Gallon
HR	Hour
KGAL	Thousand Gallons
LB	Pound
LF	Linear Foot
LO	Location
NA	Not Applicable
OSHA	Occupational Safety and Health Administration
PMA	Polymer Modified Asphalt
PSF	Pounds per Square Foot
PVC	Polyvinyl Chloride
NRMCA	National Ready Mixed Concrete Association
QPL	Qualified Products List
SCH	Schedule
SF	Square Foot
SY	Square Yard
TN	Ton

- **PAY ITEM # 1 / FDOT PAY ITEM # 101-1 / MOBILIZATION - NIGHT WORK PER PROJECT / UNIT EA**

Description
Unit price of the pay item listed above includes full compensation for all work described in the referenced FDOT pay item for all projects performed during the night.

- **PAY ITEM # 2 / FDOT PAY ITEM # 101-1 / MOBILIZATION - MOBILIZE WITHIN 24 HR PER PROJECT / UNIT EA**

  Description
  Unit price of the pay item listed above includes full compensation for all work described in the referenced FDOT pay item for projects where the Contractor needs to be mobilized within twenty-four (24) hours after requested by the Contract Administrator or his designee.

- **PAY ITEM # 3 / FDOT PAY ITEM # 101-1 /MOBILIZATION - MOBILIZE WITHIN 4 HR PER PROJECT / UNIT EA**

  Description
  Unit price of the item listed above includes full compensation for all work described in the referenced FDOT pay item for projects where the Contractor needs to be mobilized within four (4) hours after requested by the Contract Administrator or his designee.

- **PAY ITEM # 8 / FDOT PAY ITEM # 102-71-11 / BARRIER WALL, TEMPORARY, CONCRETE, UP TO 30 DAYS / UNIT LF**

- **PAY ITEM # 9 / FDOT PAY ITEM # 102-71-12 / BARRIER WALL, TEMPORARY, WATERFILLED, UP TO 30 DAYS / UNIT LF**

- **PAY ITEM # 10 / FDOT PAY ITEM # 102-71-13 / BARRIER WALL, TEMPORARY, LOW PROFILE, CONCRETE, UP TO 30 DAYS / UNIT LF**

- **PAY ITEM # 11 / FDOT PAY ITEM # 102-71-14 / BARRIER WALL, TEMPORARY, TYPE K, UP TO 30 DAYS / UNIT LF**

  Description
  Unit price of pay items 8 thru 11, and 25 listed above includes full compensation for all work described in the referenced FDOT pay items for up to 30 days.

- **PAY ITEM # 20 / FDOT PAY ITEM # NA / TUBULAR MARKER / UNIT ED**

  Description
  Unit price of the item listed above includes full compensation for furnishing all work, labor, material, equipment, and incidentals required to properly install the referenced material. Material must meet the specifications of FDOT Standard Specifications Section 600.

- **PAY ITEM # 31 / FDOT PAY ITEM # NA /LIGHT TOWER, AMIDA / TEREX AL4000 OR EQUIVALENT / UNIT ED**

  Description

  Unit price of the pay item listed above includes furnish and installation of the above-specified equipment.
  - Four light fixtures, 1000w each
  - Metal Halide
  - Round aluminum reflector
  - Tempered glass lens

- **PAY ITEM # 32 / FDOT PAY ITEM # NA / FDOT CERTIFIED FLAG PERSON / UNIT HR**

  Description
  Unit price of the pay item listed above includes full compensation for worked performed by a FDOT certified flagman. Proof of certification must be provided to County Project Manager.

- **PAY ITEM # 33 / FDOT PAY ITEM # NA / ORANGE PLASTIC MESH AND POST, UP TO 30 DAYS / UNIT LF**

  Description
  Unit price of the pay item listed above includes full compensation for furnishing, installation and removal of specified material. Required steel posts for proper installation of the fence are also part of this pay item. Unit price includes full compensation for all work up to 30 days.

- **PAY ITEM # 43 / FDOT PAY ITEM # NA / MOWING, TRIMMING, EDGING, WEEDING, AND TRASH PICK-UP / UNIT SY**

- **PAY ITEM # 44 / FDOT PAY ITEM # NA / SURVEY WORK, SIGNED & SEALED DRAWINGS / UNIT HR**

  Description
  Unit price of the pay item listed above includes full compensation for worked performed by a professional Florida State licensed land surveyor and equipment. Proof of license must be provided to County Project Manager. A maximum of five (5) signed and sealed sets in a format specified by the County Project Manager are required.

- **PAY ITEM # 45 / FDOT PAY ITEM # NA / SURVEY FIELD WORK, 3-PERSON CREW / UNIT HR**

  Description
  Unit price of the pay item listed above includes full compensation for work performed by a 3-person survey field crew and their equipment. Proof of Florida State land surveyor license must be provided to County Project Manager.

- **PAY ITEM # 46 / FDOT PAY ITEM # NA / UTILITY LOCATING AND EXCAVATION TEST HOLE, 0-4' DEPTH / UNIT EA**

- **PAY ITEM # 47 / FDOT PAY ITEM # NA / UTILITY LOCATING AND EXCAVATION TEST HOLE, 4-8' DEPTH / UNIT EA**

  Description
  Unit price of pay items 46 and 47 listed above includes full compensation for:

  - Detailed investigation of any available records, plans, and maps.
  - Field staking of the exact location of the proposed features in possible conflict with existing utilities.
  - Location of existing buried utilities or any other structures that may conflict with proposed construction.
  - Non-destructive, vacuum excavation test hole to expose the utility at all points of possible conflict.
  - Restoration of the test hole and marking of the location utilizing established utility designating color codes and ASCE Standards of Practice.
  - Formal Test Hole Report and Inventory detailing all structures and utilities found including depth below natural ground and direction.
  - Total station exhibit of the test hole locations for CADD mapping of project site.

- **PAY ITEM # 48 / FDOT PAY ITEM # NA / CURB OR CURB AND GUTTER REMOVAL / UNIT LF**

  Description
  Unit price of the pay item listed above includes full compensation for performing and completing all the work of removal and legal disposal of concrete curb or curb and gutter.

- **PAY ITEM # 49 / FDOT PAY ITEM # NA / CONCRETE SIDEWALK REMOVAL / UNIT SY**

  Description
  Unit price of the pay item listed above includes full compensation for performing and completing all the work of removal and legal disposal of concrete sidewalk.

- **PAY ITEM # 50 / FDOT PAY ITEM # 110-4 / REMOVAL OF EXISTING CONCRETE PAVEMENT / UNIT SY**

  Description
  Unit price of the pay item listed above includes full compensation for all the work described in the referenced FDOT pay item, except for curb, curb and gutter, and sidewalk removal, which will be paid under a separate pay item.

- **PAY ITEM # 49 / FDOT PAY ITEM # NA / REMOVAL AND DISPOSAL OF UNSUITABLE, NON-CONTAMINATED MATERIALS / UNIT CY**

  Description
  Unit price of the pay item listed above includes full compensation for furnishing all materials, equipment, and labor required to properly perform the removal and legal disposal of unsuitable, non-contaminated material from the job site.

- **PAY ITEM # 51 / FDOT PAY ITEM # NA / REMOVAL AND DISPOSAL OF UNSUITABLE, NON-CONTAMINATED MATERIALS / UNIT CY**

  Description
  Unit price of the pay item listed above includes full compensation for all work described in the referenced FDOT pay item. This pay item also includes the removal and legal disposal of drainage structures, pipes, asphalt, and any other materials or structures encounter during the excavation activities.

- **PAY ITEM # 57 / FDOT PAY ITEM # NA / GRAVEL FILL / UNIT CY**

  Description
  Unit price of the item listed above includes full compensation for furnishing all work, labor, material, equipment, and incidentals required to properly install the referenced material. Material must meet the specifications of FDOT Standard Specifications Section 901.

- **PAY ITEM # 58 / FDOT PAY ITEM # NA / 2" BROWN RIVER ROCK / UNIT CY**

  Description
  Unit price of the item listed above includes full compensation for furnishing all materials, equipment, and labor required to properly install the referenced material.

- **PAY ITEM # 60 / FDOT PAY ITEM # NA / FLOWABLE FINE GROUT, 3000 PSI / UNIT CY**

  Description
  Unit price of the pay item listed above includes full compensation for all labor, equipment, and incidentals for furnishing and install ready mixed concrete including delivery at the construction job site and any regulatory and environmental impact fees. This ready mixed concrete shall be proportioned in accordance with the applicable proportions of ACI 211 and shall meet design characteristics listed below. The required minimum strength at 28 days is 3,000 psi following current ASTM standards (ASTM C-109) and evaluated per ACI recommended standards and practices. Materials shall conform to current ASTM standards. Concrete mix information shall be submitted to County staff within 5 business days upon request.

Table 2: Mix Design Characteristics	
Slump	9” +/- 1.5”
Air	6% +/- 1.5%
Unit Weight	130.1 lbs./cf
Water/Cement Ratio	0.53

- **PAY ITEM # 61 / FDOT PAY ITEM # NA / FILL SAND / UNIT CY**

  Description
  Unit price of the item listed above includes full compensation for furnishing all work, labor, material, equipment, and incidentals required to properly install the referenced material. Material must meet the specifications of FDOT Standard Specifications Section 902.

- **PAY ITEM # 93 / FDOT PAY ITEM # NA / TYPE S ASPHALTIC CONCRETE / UNIT TN**

  Description
  Unit price of the pay item listed above includes full compensation for all labor, equipment, incidentals, and material as described in FDOT Standard Specifications Section 331, 2000 Edition (available at: ftp://ftp.dot.state.fl.us/LTS/CO/Specifications/SpecBook/2000Book/d331.pdf).

- **PAY ITEM # 94 / FDOT PAY ITEM # NA / TEMPORARY PATCH USING COLD ASPHALTIC MIX / UNIT CF**

  Description
  Unit price of the pay item listed above includes full compensation for all labor, equipment, incidentals, and material to install temporary patch using cold asphaltic mix.

- **PAY ITEM # 109 / FDOT PAY ITEM # 400-1-AAA / CONCRETE CLASS I / UNIT CY**
- **PAY ITEM # 114 / FDOT PAY ITEM # 400-2-AAA / CONCRETE CLASS II / UNIT CY**
- **PAY ITEM # 115 / FDOT PAY ITEM # 400-3-AAA / CONCRETE CLASS III / UNIT CY**
- **PAY ITEM # 116 / FDOT PAY ITEM # 400-4-AAA / CONCRETE CLASS IV / UNIT CY**
- **PAY ITEM # 118 / FDOT PAY ITEM # 400-8-AAA / CONCRETE CLASS V / UNIT CY**

  Description
  Unit price of pay items 109, 114, 115, 116, and 118 listed above include full compensation for all the work described under the referenced pay item regardless of the type of structure.

- **PAY ITEM # 117 / FDOT PAY ITEM # 400-4-8: CONCRETE CLASS IV, BULKHEAD/ UNIT CY**

  Description
  Unit price of pay item listed above include full compensation for all the work described under the referenced pay item including all form work, excavation, dewatering, and placement.

- **PAY ITEM # 125 / FDOT PAY ITEM # NA / CONCRETE SEAWALL SURFACES CLEANING (PRESSURE WASH) BELOW WATER 10,000 PSI, 4 HR MINIMUM CHARGE / UNIT HR**

  Description
  Unit price of the pay item listed above includes full compensation for all labor, equipment, incidentals, and material using 10,000 psi pressure cleaner for concrete seawall; in addition, it can be used for cleaning underwater areas.

- **PAY ITEM # 126 / FDOT PAY ITEM # NA / CONCRETE (SIDEWALK, CURB, GUTTER) SURFACES CLEANING (PRESSURE WASH) / UNIT SY**

  Description
  Unit price of the pay item listed above includes full compensation for all labor, equipment, incidentals, and material. Required to pressure wash concrete surfaces in the public right-of-way such as sidewalks, entryways, curbs, gutters, etc. using high pressure equipment. The designated areas are to be cleaned in their entirety (NOT spot-cleaned). The equipment shall be capable of delivering high-pressure for removing stains, spills, etc. from concrete surfaces without damaging the surface material. The use of chemicals must be approved by the Project Manager. All pressure washing equipment is subject to the Project Manager's approval. Contractor is responsible for protecting private property by damming doorways and preventing water from splashing on doors, windows, etc. If damage occurs, Contractor is required to mitigate damages.

- **PAY ITEM # 195 / FDOT PAY ITEM # NA / REPLACEMENT OF AIRCRAFT RATED CATCH BASIN TOP / UNIT EA**

  Description
  Unit price of the pay item listed above includes removal of damaged top, furnish and install US Foundry 9130 frame and 6805 grate cast in concrete cover slab as shown on the attached drawings (Figure 1). Cover may be round or rectangular. Cost includes all labor and material, excavation to remove damaged slab and concrete work. Paving repair will be billed as required using separate pay items.

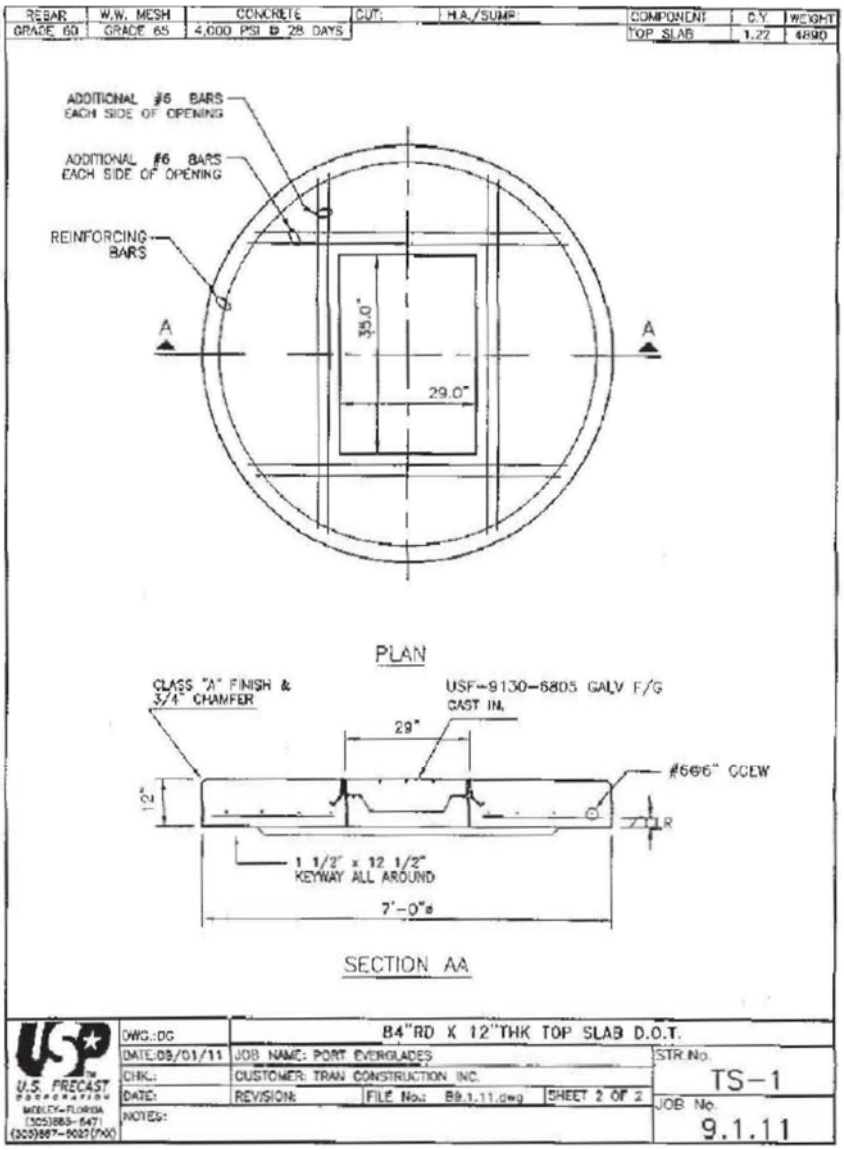

Figure 1

- **PAY ITEM # 196 / FDOT PAY ITEM # 430-173-112, 430-173-115, 430-173-118, OR 430-173-124 / PIPE CULVERT OPTIONAL MATERIAL, ROUND, 12", 15", 18", 24", GUTTER DRAIN / UNIT LF**

- **PAY ITEM # 197 / FDOT PAY ITEM # 430-173-112, 430-173-115, 430-173-118, OR 430-173-124 / PIPE CULVERT RCP MATERIAL ONLY, ROUND, 12", 15", 18", 24", GUTTER DRAIN / UNIT LF**

- **PAY ITEM # 198 / FDOT PAY ITEM # 430-173-130 OR 430-173-136 / PIPE CULVERT OPTIONAL MATERIAL, ROUND, 30",36", GUTTER DRAIN / UNIT LF**

- **PAY ITEM # 199 / FDOT PAY ITEM # 430-173-130 OR 430-173-136: PIPE CULVERT RCP MATERIAL ONLY, ROUND, 30",36", GUTTER DRAIN / UNIT LF**

- **PAY ITEM # 200 / FDOT PAY ITEM # 430-173-142 OR 430-173-148: PIPE CULVERT OPTIONAL MATERIAL, ROUND, 42",48", GUTTER DRAIN / UNIT LF**

- **PAY ITEM # 201 / FDOT PAY ITEM # 430-173-142 OR 430-173-148: PIPE CULVERT RCP MATERIAL ONLY, ROUND, 42",48", GUTTER DRAIN / UNIT LF**

- **PAY ITEM # 202 / FDOT PAY ITEM # 430-174-112, 430-174-115, 430-174-118, OR 430-174-124: PIPE CULVERT, OPTIONAL MATERIAL, ROUND, 12", 15", 18", 24", SD / UNIT LF**

- **PAY ITEM # 203 / FDOT PAY ITEM # 430-174-112, 430-174-115, 430-174-118, OR 430-174-124 / PIPE CULVERT, RCP MATERIAL ONLY, ROUND, 12", 15", 18", 24", SD / UNIT LF**

- **PAY ITEM # 204 / FDOT PAY ITEM # 430-174-130 OR 430-174-136 / PIPE CULVERT, OPTIONAL MATERIAL, ROUND, 30",36", SD / UNIT LF**

- **PAY ITEM # 205 / FDOT PAY ITEM # 430-174-130 OR 430-174-136 / PIPE CULVERT, RCP MATERIAL ONLY, ROUND, 30",36", SD / UNIT LF**

- **PAY ITEM # 206 / FDOT PAY ITEM # 430-174-142 OR 430-174-148 / PIPE CULVERT, OPTIONAL MATERIAL, ROUND, 42",48", SD / UNIT LF**

- **PAY ITEM # 207 / FDOT PAY ITEM # 430-174-142 OR 430-174-148 / PIPE CULVERT, RCP MATERIAL ONLY, ROUND, 42",48", SD / UNIT LF**

- **PAY ITEM # 208 / FDOT PAY ITEM # 430-174-154 OR 430-174-160 / PIPE CULVERT, OPTIONAL MATERIAL, ROUND, 54",60", SD / UNIT LF**

- **PAY ITEM # 209 / FDOT PAY ITEM # 430-174-154 OR 430-174-160 / PIPE CULVERT, RCP MATERIAL ONLY, ROUND, 54",60", SD / UNIT LF**

- **PAY ITEM # 210 / FDOT PAY ITEM # 430-174-215 OR 430-174-218 / PIPE CULVERT, OPTIONAL MATERIAL, OTHER SHAPE - ELLIP/ARCH, 15", 18" SD / UNIT LF**

- **PAY ITEM # 211 / FDOT PAY ITEM # 430-174-215 OR 430-174-218 / PIPE CULVERT, RCP MATERIAL ONLY, OTHER SHAPE - ELLIP/ARCH, 15", 18" SD / UNIT LF**

- **PAY ITEM # 212 / FDOT PAY ITEM # 430-174-224 / PIPE CULVERT, OPTIONAL MATERIAL, OTHER SHAPE - ELLIP/ARCH, 24" SD / UNIT LF**

- **PAY ITEM # 213 / FDOT PAY ITEM # 430-174-224 / PIPE CULVERT, RCP MATERIAL ONLY, OTHER SHAPE - ELLIP/ARCH, 24" SD / UNIT LF**

- **PAY ITEM # 214 / FDOT PAY ITEM # 430-174-230 OR 430-174-236 / PIPE CULVERT, OPTIONAL MATERIAL, OTHER SHAPE - ELLIP/ARCH, 30", 36" SD / UNIT LF**

- **PAY ITEM # 215 / FDOT PAY ITEM # 430-174-230 OR 430-174-236 / PIPE CULVERT, RCP MATERIAL ONLY, OTHER SHAPE - ELLIP/ARCH, 30", 36" SD / UNIT LF**

- **PAY ITEM # 216 / FDOT PAY ITEM # 430-175-115, 430-175-118, OR 430-175-124 / PIPE CULVERT, OPTIONAL MATERIAL, ROUND, 15", 18", 24" S/CD / UNIT LF**

- **PAY ITEM # 217 / FDOT PAY ITEM # 430-175-115, 430-175-118, OR 430-175-124 / PIPE CULVERT, RCP CLASS IV ONLY, 15", 18", 24" S/CD / UNIT LF**

- **PAY ITEM # 218 / FDOT PAY ITEM # 430-175-130 / PIPE CULVERT, OPT MATERIAL, ROUND, 30"S/CD / UNIT LF**

- **PAY ITEM # 219 / FDOT PAY ITEM # 430-175-130 / PIPE CULVERT, RCP CLASS IV ONLY, 30"S/CD / UNIT LF**

- **PAY ITEM # 220 / FDOT PAY ITEM # 430-175-136 / PIPE CULVERT, OPT MATERIAL, ROUND, 36"S/CD / UNIT LF**

- **PAY ITEM # 221 / FDOT PAY ITEM # 430-175-136 / PIPE CULVERT, RCP CLASS IV ONLY, 36"S/CD / UNIT LF**

  Description
  Unit price of pay items 196, 197, 198, 199, 200, 201, 202, 203, 204, 205, 206, 207, 208, 209, 210, 211, 212, 213, 214, 215, 216, 217, 218, 219, 220, and 221listed above include full compensation for all work described in the referenced FDOT pay items. However, pipe material is to be selected by the Contract Administrator or his/her designee on a project-by-project basis.

- **PAY ITEM # 251 / FDOT PAY ITEM # NA / BALLAST ROCK, FRENCH DRAIN AGGREGATE / UNIT CY**

  Description
  Unit price of the item listed above includes full compensation for furnishing all materials, equipment, and labor required to properly install the referenced material. Material must meet the specifications of FDOT Standard Specifications Section 443.

- **PAY ITEM # 253 / FDOT PAY ITEM # NA / STORM DRAINAGE DESILTING, VIDEO & FINISHED CD OR DVD, 0-24" PIPE / UNIT LF**

- **PAY ITEM # 254 / FDOT PAY ITEM # NA / STORM DRAINAGE DESILTING, VIDEO & FINISHED CD OR DVD, 25-36" PIPE / UNIT LF**

- **PAY ITEM # 255 / FDOT PAY ITEM # NA / STORM DRAINAGE DESILTING, VIDEO & FINISHED CD OR DVD, 37-48" PIPE / UNIT LF**

- **PAY ITEM # 256 / FDOT PAY ITEM # NA / STORM DRAINAGE DESILTING, VIDEO & FINISHED CD OR DVD, 49-60" PIPE / UNIT LF**

- **PAY ITEM # 257 / FDOT PAY ITEM # NA / STORM DRAINAGE DESILTING, VIDEO & FINISHED CD OR DVD, 61" OR GRATER PIPE / UNIT LF**

  Description
  Unit price of pay items 253 thru 257 listed above include full compensation for all work, labor, material, and equipment required for desilting, video, and produce the video report of the storm drain system. Work must comply with the FDOT Standard Specifications Section 430 and any other applicable section.

- **PAY ITEM # 258 / FDOT PAY ITEM # NA / VIDEO STORM DRAINAGE & FINISH CD, 4 HR MINIMUM CHARGE / UNIT HR**

  Description
  Unit price of pay item listed above includes full compensation for all work, labor, material, and equipment required for video recording any storm drain system. Video report must also be included in the unit price for this pay item. Work must comply with the FDOT Standard Specifications Section 430 and any other applicable section.

- **PAY ITEM # 259 / FDOT PAY ITEM # NA / WELL POINT SYSTEM COMPLETE, 4" PUMP / UNIT ED**

- **PAY ITEM # 260 / FDOT PAY ITEM # NA / WELL POINT SYSTEM COMPLETE, 6" PUMP / UNIT ED**

- **PAY ITEM # 261 / FDOT PAY ITEM # NA / WELL POINT SYSTEM COMPLETE, 8" PUMP / UNIT ED**

  Description
  Unit price of pay items 259 thru 261 listed above include full compensation for all work, labor, material, and equipment required to furnish and install the specified well point system.

- **PAY ITEM # 262 / FDOT PAY ITEM # NA / LASER PROFILE, STORM DRAINAGE WITH DVD VIDEO & REPORT / UNIT LF**

  Description
  Unit price of pay item listed above includes full compensation for all work, labor, material, and equipment required for laser profiling any storm drain system. Video report must also be included in the unit price for this pay item. Work must comply with the FDOT Standard Specifications Section 430 and any other applicable section.

- **PAY ITEM # 263 / FDOT PAY ITEM # NA / PIPE/CULVERT DIVING INSPECTION 3-PERSON CREW, 4 HR MINIMUM CHARGE / UNIT HR**

  Description
  Unit price of this item includes full compensation for a minimum of a 3-person crew to perform pipe/culvert diving inspection activities. All material, labor, and equipment are included under this pay item. Report and photographs must also be included in the unit price for this pay item. Mobilization time is an incidental cost.

- **PAY ITEM # 264 / FDOT PAY ITEM # NA / BY-PASS PUMP 4" / UNIT ED**

- **PAY ITEM # 265 / FDOT PAY ITEM # NA / BY-PASS PUMP 6" / UNIT ED**

- **PAY ITEM # 266 / FDOT PAY ITEM # NA / BY-PASS PUMP 8" / UNIT ED**

  Description
  Unit price of pay items 264 thru 266 listed above include full compensation for all work, labor, material, and equipment required to furnish and install the specified by-pass pump. Mobilization time is an incidental cost.

- **PAY ITEM # 267 THRU 280 / FDOT PAY ITEM # NA / 12", 15”, 18”, 24”, 30”, 36”, 42”, 48”, 54”, 60”, 66”, 72”, 78”, 84” PLUG FOR BLOCKING DRAINAGE LINE WITHIN WATERTABLE - INCLUDES INSTALLATION, OPERATION AND REMOVAL / UNIT EA**

  Description
  Unit price of the items 268 thru 280 listed above include full compensation for all work, labor, material, and equipment required for furnishing, installation, operation (i.e. inflation, deflation, etc.), and removal of the specified plugs for blocking drainage line within the watertable.

- **PAY ITEM # 281 / FDOT PAY ITEM # NA / STEEL ROAD PLATE, UP TO 30 DAYS / UNIT SF**

  Description
  Unit price of the item listed above includes full compensation for all work, labor, material, and equipment required to furnish and install steel road plates used primarily to cover up an open trench.

Steel road plates shall meet the following specifications:

- Withstand an H-20 loading of 450 psf without any movement.
- Fabricated to meet ASTM A36 requirements, 1” minimum thickness.
- All steel plates shall be without deformation. The plate must not deviate more than ¼ inch when measured with a 10 feet straight edge along its length.

Installation

- Site conditions must be evaluated by a person knowledgeable of the current OSHA Standards.
- The soil/material in the trench must remain vertical once the plates are placed over the open excavation. Excavation must be adequately shored to withstand the bridging and traffic loads.
- The area covered by the plate must be free of hazards such as, but not limited to, boulders, roots, trees, existing building foundations, above-ground utilities and water.
- The loading and unloading of the plate system must be in accordance to OSHA standards.
- When two or more plates are used, they must be tack welded together at each corner to eliminate vertical movement. Alternative methods to accomplish shall be approved by County Project Manager.
- Steel plates shall be large enough to extend a minimum 12 inches beyond the edges of the open excavation.
- Installed plates shall be free of vibrations and rocking. Wedges or other non–asphaltic devices shall be used for leveling to eliminate the rocking of the plates. Compacted temporary asphalt shall be used to fill all gaps between the plates and existing pavement.
- Temporary paving with a cold or hot asphalt mix should be used to taper the edges and cover the edges of the steel plate. The recommended width of the taper is 12 inches.
- Daily inspection must be performed by the Contractor to note and correct any variations in site conditions that may affect the steel plate installation.

- Type I installation diagram (Figure 2):

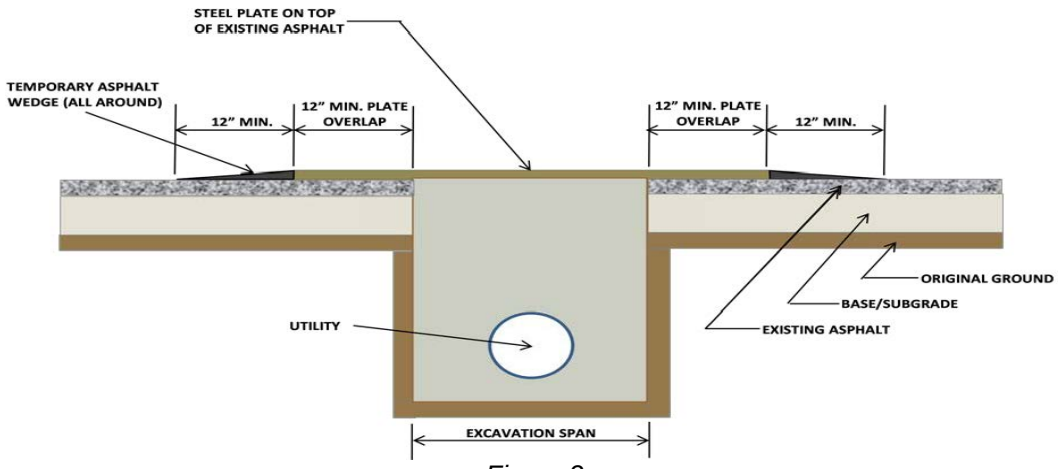

Figure 2

- Type II installation diagram (flush)(Figure 3):

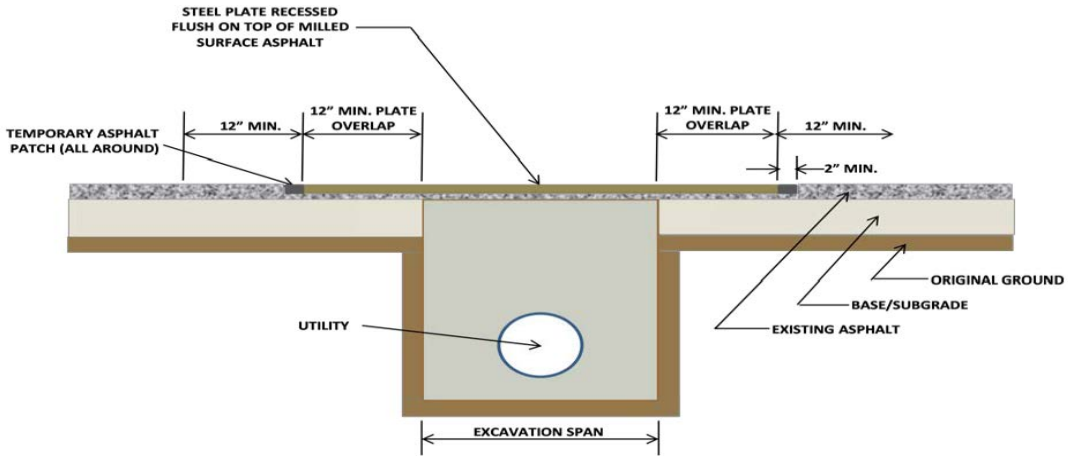

Figure 3

  - Steel plates shall be anchored into the existing surface. This is typically done by drilling holes and inserting support pins around the edges or through pre-drilled holes in the plate itself. Proprietary products such as plate locks may be used if approved by County Project Manager.
  - Warning signs shall be installed. W8-24 warning signs shall be placed approximately 100 feet in advance of the plated locations.

- **PAY ITEM # 282 / FDOT PAY ITEM # NA / MINOR INLET-TOP REPAIR (NO REINFORCEMENT REPAIR) / UNIT EA**

  Description
  Unit price of pay item listed above includes full compensation for all work, labor, material, and equipment necessary to perform inlet-top repairs where reinforcement is in good condition. Repair materials shall conform to FDOT Standard Specifications Section 930. Work includes repair of any cracking, surface pits, and peeling.

- **PAY ITEM # 283 / FDOT PAY ITEM # NA / MAJOR INLET-TOP REPAIR (REINFORCEMENT REPAIR) / UNIT EA**

  Description
  Unit price of pay item listed above includes full compensation for all work, labor, material, and equipment necessary to perform inlet-top repairs where reinforcement is not in good condition. Repair materials shall conform to FDOT Standard Specifications Section 930. Work includes repair of any cracking, surface pits, and peeling. For any permanent exposed steel where the galvanized coating has been damaged and oxidized, steel must be removed and replaced as directed by County Project Manager.

- **PAY ITEM # 284 / FDOT PAY ITEM # NA / PLASTIC FILTER FABRIC, SUBSURFACE / UNIT SY**

  Description
  Unit price of the pay item listed above includes full compensation for all work, labor, material, equipment and incidentals required to properly install the referenced material. Material must meet the specifications of FDOT Standard Specification, Section 514 and any other applicable sections.

- **PAY ITEM # 303 / FDOT PAY ITEM # 522-2 / CONCRETE SIDEWALK AND DRIVEWAYS, 6" THICK / UNIT SY**

  Description
  Unit price of the pay item listed above includes full compensation for all work described in the referenced FDOT pay item, except that curb ramps and detectable warning installation are not covered under this pay item.

- **PAY ITEM # 304 / FDOT PAY ITEM # NA / CONCRETE SIDEWALK, 8" THICK / UNIT SY**

  Description
  Unit price of the pay item listed above includes full compensation for all work described in FDOT pay item 522-2; except for the sidewalk thickness, which must be 8” minimum.

  In addition, curb ramps and detectable warning installations are not covered under this pay item.

- **PAY ITEM # 305 / FDOT PAY ITEM # NA / CONCRETE SIDEWALK, 10" THICK / UNIT SY**

  Description
  Unit price of the pay item listed above includes full compensation for all work described in FDOT pay item 522-2; except for the sidewalk thickness, which must be 10” minimum.

  In addition, curb ramps and detectable warning installations are not covered under this pay item.

- **PAY ITEM # 306 / FDOT PAY ITEM # NA / PERVIOUS CONCRETE PAVEMENT - SIDEWALK, 6" THICK / UNIT SY**

  Description
  Unit price of the pay item listed above includes full compensation for all work described in FDOT pay item 522-2; except for the concrete material, which must conform with ACI 522R-06.

  In addition, in accordance with ACI 522.1-08, Specification for Pervious Concrete Pavement, the Contractor or its subcontractor shall employ a minimum of one NRMCA certified pervious concrete craftsman who must be on site, overseeing each placement crew during concrete placement, or a minimum of three NRMCA certified Pervious Concrete Installers or a minimum of five NRMCA certified Pervious Concrete Technicians, who shall be on site working as members of each placement crew during all concrete placement unless otherwise specified. Alternative documentation of qualifications shall be permitted when approved by the Contractor Administrator or his/her designee. Certifications must be current prior to commencement of ordered work.

- **PAY ITEM # 307 / FDOT PAY ITEM # NA / PERVIOUS CONCRETE PAVEMENT - TRAFFIC RATED, 8" THICK / UNIT SY**

  Description
  Unit price of the pay item listed above includes full compensation for all work described in FDOT pay item 522-2; except for the concrete material, which must conform with ACI 522R-06.

  In addition, in accordance with ACI 522.1-08, Specification for Pervious Concrete Pavement, the Contractor or its subcontractor shall employ a minimum of one NRMCA certified pervious concrete craftsman who must be on site, overseeing each placement crew during concrete placement, or a minimum of three NRMCA certified Pervious Concrete Installers or a minimum of five NRMCA certified Pervious Concrete Technicians, who shall be on site working as members of each placement crew during all concrete placement unless otherwise specified. Alternative

documentation of qualifications shall be permitted when approved by the Contractor Administrator or his/her designee. Certifications must be current prior to commencement of ordered work.

- **PAY ITEM # 309 / FDOT PAY ITEM # 523-1 / PATTERNED PAVEMENT, VEHICULAR AREAS, FDOT APL 523-000-009, TRAFFIC PATTERNS ONLY / UNIT SY**

  Description
  Unit price of the pay item listed above includes full compensation for all work described in the referenced FDOT pay item. However, only material specified in APL 523-000-009 will be accepted for this pay item. More information about products specified in this bid, which reference an APL Number can be found at https://fdotwp1.dot.state.fl.us/ApprovedProductList/Specifications under Specification Section Number 523.

- **PAY ITEM # 314 / FDOT PAY ITEM # 527-2 / DETECTABLE WARNING ON EXISTING WALKING SURFACE, RETROFIT, F&I / UNIT SF**

  Description
  Unit price of the pay item listed above includes full compensation for all work described in the referenced FDOT pay item; however the unit of measurement is square feet of installed detectable warning.

- **PAY ITEM # 315 / FDOT PAY ITEM # 527-2 / DETECTABLE WARNING ON EXISTING WALKING SURFACE, RETROFIT, FDOT APL 527-000-015 OR APL 527-000-043 ONLY, F&I / UNIT SF**

  Description
  Unit price of the pay item listed above includes full compensation for all work described in the referenced FDOT pay item; however the unit of measurement is square feet of installed detectable warning. In addition, only material specified in APL 527-000-015 or APL 527-000-043 will be accepted for this pay item. More information about products specified in this bid, which reference an APL Number can be found at https://fdotwp1.dot.state.fl.us/ApprovedProductList/Specifications under Specification Section Number 527.

- **PAY ITEM # 316 / FDOT PAY ITEM # NA / DETECTABLE WARNING ON EXISTING WALKING SURFACE, CAST-IN-PLACE, F&I / UNIT SF**

  Description
  Unit price of the pay item listed above includes full compensation for all work specified in the FDOT pay item 527-2; except that the detectable warning shall be cast-in-place and the unit of measurement is square feet of installed detectable warning. Concrete removal will be paid under a separate pay item.

- **PAY ITEM # 317 / FDOT PAY ITEM # NA / ADA COMPLIANT CURB RAMP, SINGLE DIRECTION / UNIT EA**

  Description
  Unit price of the pay item listed above includes full compensation for:

  - All work described in FDOT Standard Specifications 522-2.
  - Ramp must conform to FDOT Design Standards Index 300 and 304 or variation approved by the County Project Manager.
  - County Project Manager shall specify ramp type.
  - Ramp size shall not exceed 100 SF.

- **PAY ITEM # 318 / FDOT PAY ITEM # NA / ADA COMPLIANT CURB RAMP, TWO-DIRECTION / UNIT EA**

  Description
  Unit price of the pay item listed above includes full compensation for:

  - All work described in FDOT Standard Specifications 522-2.
  - Ramp must conform to FDOT Design Standards Index 300 and 304 or variation approved by the County Project Manager.
  - County Project Manager shall specify ramp type.
  - Ramp size shall not exceed 200 SF.

- **PAY ITEM # 319 / FDOT PAY ITEM # NA / 6" PVC BOLLARD WITH REFLECTIVE TAPE, F&I/ UNIT EA**

  Description
  Unit price of the item listed above includes full compensation for all required work, material, equipment, and labor required to construct and install bollard and its foundation as per drawings below (Figure 4). Any required excavation and backfilling are incidental to the unit price of this item.

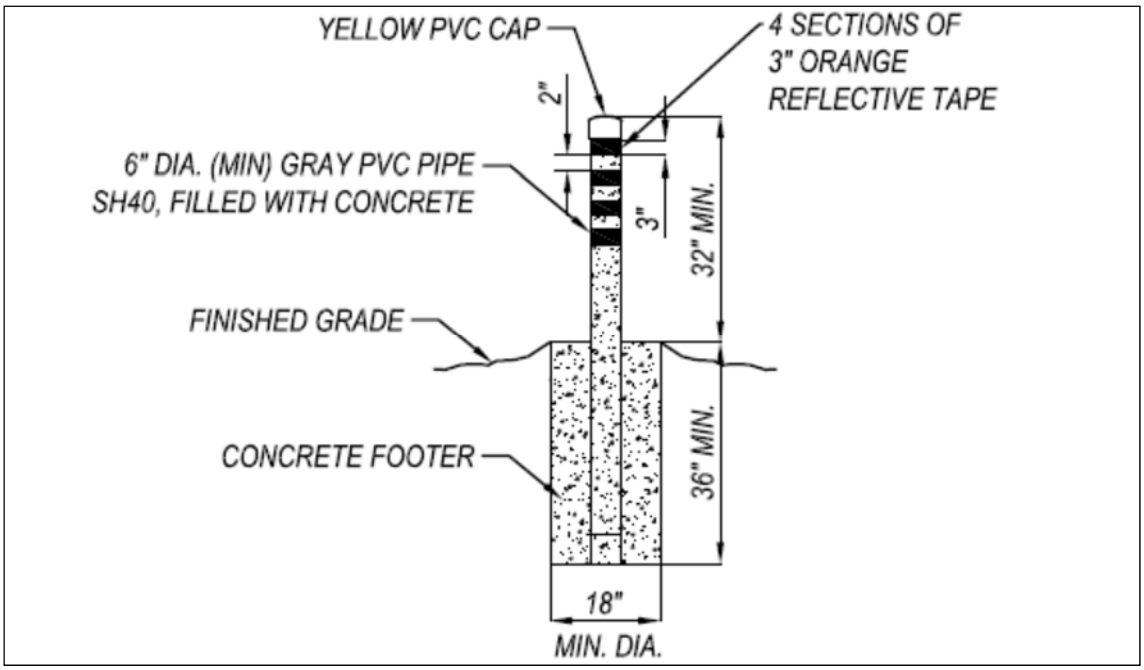

Figure 4

- **PAY ITEM # 320 / FDOT PAY ITEM # NA / 6" REMOVABLE AND LOCKABLE BOLLARD RPL6 BY TRAFFIC GUARD OR APPROVED EQUAL, F&I / UNIT EA**

  Description
  Unit price of the item listed above includes full compensation all required work, material, equipment, and labor required to construct and install bollard and its foundation. Bollard foundation work will be paid under separate pay items. Contractor proposed equal products will be evaluated and approved on a project by project basis by the County Project Manager.
  Bollard Manufacturer contact information:

TrafficGuard® Direct, Inc. or approve equal
sales@trafficguard.net
web: http://www.trafficguard.net/
phone:877-727-7347
fax:800-814-7194
P.O. Box 201
Geneva, IL 60134-9946, USA.

- **PAY ITEM # 332 / FDOT PAY ITEM N/A / RETROFIT EXIST GUARDRAIL-PEDESTRIAN/CYCLE PIPE RAIL / UNIT LF**

- **PAY ITEM # 347 / FDOT PAY ITEM N/A / BARRIER DELINEATORS / UNIT EA**

Description

Unit price of the item listed above includes full compensation for all labor and material necessary to properly complete the guardrail repair. All parts and materials shall conform to the latest editions of the FDOT Design Standards Index 400, and FDOT Standard Specifications Section 993.

- **PAY ITEM # 361 / FDOT PAY ITEM # NA / FENCING TYPE B, 0.0'-10.0', RELOCATE / UNIT LF**

Description

Unit price of the item listed above includes full compensation for all work, labor, and material necessary to relocate an existing fence type B.

- **PAY ITEM # 362 / FDOT PAY ITEM # NA / FENCING TYPE B, TOP RAIL / UNIT LF**

Description

Unit price of the item listed above includes full compensation for all work, labor, and material necessary to install top rail in a type B fence.

- **PAY ITEM # 379 / FDOT PAY ITEM # NA / MULCH REPLACEMENT, F&I / UNIT CY**

Description

Unit price of the item listed above includes full compensation for furnishing all materials, equipment, and labor required to properly install the referenced material.

Mulch will be a natural product that has not been dyed and is free of weed seeds. The preferred species of mulch is melaleuca or pine bark; however, all mulch material must approved by the CONTRACT ADMINISTRATOR or his/her designee prior to purchasing the product. The mulch product must be delivered to the site in unopened bags or as bulk delivery. Mulch that has deteriorated in open bags will not be acceptable for use. Bulk deliveries of mulch will be acceptable only if the CONTRACTOR provides a weather-tight enclosure for storage.

Bulk mulch (in cubic yards) is preferred and must be delivered and installed. If bags are used, they must be delivered and installed, and the quantity used will be converted to cubic yards for payment. The amount of the mulch used must be reconciled by providing documentation that verifies the quantities. Prior to mulch deliveries, the CONTRACT ADMINISTRATOR or his/her designee must be contacted to inspect the quality of the material and verify the quantity.

- **PAY ITEM # 383 / FDOT PAY ITEM # NA / MISCELLANEOUS GROUND COVER/SHRUBS INSTALLATION (1-GALLON CONTAINER) / UNIT EA**

- **PAY ITEM # 384 / FDOT PAY ITEM # NA / MISCELLANEOUS GROUND COVER/SHRUBS INSTALLATION (3-GALLON CONTAINER) / UNIT EA**

- **PAY ITEM # 385 / FDOT PAY ITEM # NA / MISCELLANEOUS GROUND COVER/SHRUBS INSTALLATION (7-GALLON CONTAINER) / UNIT EA**

- **PAY ITEM # 386 / FDOT PAY ITEM # NA / MISCELLANEOUS SMALL TREES - UP TO 10' OVERALL HEIGHT / UNIT EA**
-
- **PAY ITEM # 387 / FDOT PAY ITEM # NA / MISCELLANEOUS LARGE TREES, 10'-12' OVERALL HEIGHT / UNIT EA**

- **PAY ITEM # 388 / FDOT PAY ITEM # NA / MISCELLANEOUS LARGE TREES, 13'-18' OVERALL HEIGHT / UNIT LF**

- **PAY ITEM # 389 / FDOT PAY ITEM # NA / FLORIDA THATCH PALM - UP TO 12' OVERALL HEIGHT / UNIT LF**

- **PAY ITEM # 390 / FDOT PAY ITEM # NA / ROYSTONEA SPP. (ROYAL PALM) PLANT, UP TO 12' OVERALL HEIGHT / UNIT LF**

- **PAY ITEM # 391 / FDOT PAY ITEM # NA / ROYSTONEA SPP. (ROYAL PALM) PLANT, 13'-20' OVERALL HEIGHT / UNIT LF**

- **PAY ITEM # 392 / FDOT PAY ITEM # NA / SABAL PALMETTO (CABBAGE PALM), UP TO 12' OVERALL HEIGHT / UNIT LF**

- **PAY ITEM # 393 / FDOT PAY ITEM # NA / SABAL PALMETTO (CABBAGE PALM), 13'-20' OVERALL HEIGHT / UNIT LF**

- **PAY ITEM # 394 / FDOT PAY ITEM # NA / DELONIX REGIA (ROYAL POINCIANA) PLANT, UP TO 12' OVERALL HEIGHT / UNIT FT**

- **PAY ITEM # 395 / FDOT PAY ITEM # NA / DELONIX REGIA (ROYAL POINCIANA) PLANT, 13'-20' OVERALL HEIGHT / UNIT FT**

- **PAY ITEM # 396 / FDOT PAY ITEM # NA / LARGERSTROEMIA INDICA (CRAPE MYRTLE) PLANT, UP TO 12' OVERALL HEIGHT / UNIT FT**

- **PAY ITEM # 397 / FDOT PAY ITEM # NA / BURSERA SIMARUBA (GUMBO LIMBO) PLANT, UP TO 12' OVERALL HEIGHT / UNIT FT**

- **PAY ITEM # 398 / FDOT PAY ITEM # NA / BURSERA SIMARUBA (GUMBO LIMBO) PLANT, 13'-20' OVERALL HEIGHT / UNIT FT**

- **PAY ITEM # 399 / FDOT PAY ITEM # NA / QUERCUS VIRGINIANA (LIVE OAK) PLANT, UP TO 12' OVERALL HEIGHT / UNIT FT**

- **PAY ITEM # 400 / FDOT PAY ITEM # NA / QUERCUS VIRGINIANA (LIVE OAK) PLANT, 13'-20' OVERALL HEIGHT / UNIT FT**

- **PAY ITEM # 401 / FDOT PAY ITEM # NA / TAXODIUM SPP. (CYPRESS, BALD OR POND) PLANT, UP TO 12' OVERALL HEIGHT / UNIT FT**

- **PAY ITEM # 402 / FDOT PAY ITEM # NA / TAXODIUM SPP. (CYPRESS, BALD OR POND) PLANT, 13'-20' OVERALL HEIGHT / UNIT FT**

- **PAY ITEM # 403 / FDOT PAY ITEM # NA / BULNESIA ARBOREA (VERA WOOD) PLANT, UP TO 12' OVERALL HEIGHT / UNIT FT**

Description
Unit price of pay items 383 thru 403 listed above include full compensation for furnishing and installation of trees, palms, shrubs or ground cover, including water, fertilizer, and mulch as per this document and as per manufacturers recommendations.

The cost of relocating a tree or palm shall include root pruning, water, fertilizer, and mulch as per this document and growers recommendations.

The contractor shall complied the American National Standards Institute (ANSI): Z60.1 American Standard for Nursery Stock; Florida Department of Agriculture and Consumer Services: "Grades and Standards for Nursery Plants"; National Arborist Association (NAA): Ref.1 Transplanting of Trees and Shrubs in the Southeastern United States; and the FDOT Standard Specifications, Section 580.

In addition, the contractor shall be responsible for the installation of plant material. The planting requirements and activities shall be included but not be limited to the following:

a. All plant material shall be Florida No. 1 or greater as set forth by the current issue of Florida Department of Agriculture's Grade and Standards.

b. All plant material shall be installed as per the appropriate planting method for the plant type. For trees – current recommendations are for the top of the root ball to be planted 10% above-grade and for the planting hole to be 1.5 times the width of the root ball (wider in compacted soils). Mulch should be applied at the edge of the root ball, not on top of the root ball.

c. Installed trees shall be guaranteed for a period of 1 year. If, at the end of 1 year, the tree is not alive, then a replacement of the same specification tree shall be installed. The replacement tree will fall under the same guarantee as original plant. Shrubs and groundcovers shall be guaranteed for a period of 90 days.

d. When relocating palms and trees, Florida Grades and Standards shall be followed. Watering for relocated trees shall be according to the recommended schedule.

e. In beds containing shrubs or groundcovers, the bed itself shall be maintained with weeds removed and plant material in proper health and vigor during the 90-day establishment period.

f. Palms and trees will be paid based on linear foot for overall height unless specified by container size.

g. Application of water to planted species will be required during the establishment period. Following is a recommended schedule, however, trees and plant material must meet the guarantee (refer to items c, d, and e). Thus, additional watering may prevent plant replacement. Project Manager can approve a request to reduce or discontinue watering. Project Manager can approve a written request for additional watering after establishment period as per the contract price.

First four weeks: Three (3) waterings per week (12 applications)

Second four weeks: Two (2) waterings per week. (8 applications)

Until establishment: One (1) watering per week.

At each irrigation, apply 1-3 gallons per inch of trunk diameter to the root ball only. Apply it in a manner so that all water soaks into the root ball. Do not water if root ball is already saturated. Establishment takes 3 months per inch of trunk diameter.

All watering of plant material shall comply with County or State codes and regulations, including regulating authorities guidelines. Contractor shall secure and pay at his own expense all required permits where applicable. Contractor will be reimbursed for permit fees.

Watering and fertilizing shall be included in the cost of plants.

h. When specified, the Contractor shall stake and guy all shrubs, trees and palms as per the appropriate. The Contractor is responsible for the maintenance and or repair of all staking and guying during the length of this contract or throughout the establishment period. All staking and guying shall be removed at the end of the establishment period unless otherwise directed by the County's Project Manager.

i. When necessary, the Contractor shall locate and notify any utilities at least 48 hours in advance of any excavation work, such as required for the installation of large palms and trees.

- **PAY ITEM # 404 / FDOT PAY ITEM # NA / TOPSOIL, 50% PLANTING SOIL AND 50% SAND, F&I / UNIT CY**

Description
Unit price of the item listed above includes full compensation for all required work, material, equipment, and labor required to furnish and install topsoil, 50% planting soil and 50% sand.

- **PAY ITEM # 405 / FDOT PAY ITEM # NA / FERTILIZER 50 LB. BAG / UNIT EA**

Description
Unit price of the pay item listed above include full compensation for all required work, material, equipment, and labor required to furnish and install the fertilizer.

Prior to fertilizing, the CONTRACTOR is required to contact the CONTRACT ADMINISTRATOR or his/her designee in charge of the project to identify the time and place the fertilizer will be spread. The CONTRACTOR will provide a delivery ticket that identifies the quantity and type of fertilizer delivered to the site. The quantity used will determine the payment amount.

Fertilizer shall not be applied within 20 feet of bodies of water, including ponds and drainages. Fertilizers shall be applied at a rate according the manufacturer's instructions per tree or per square foot of planted bed area. Fertilizer shall be applied when the surface area is dry and not over an early morning dew. Apply fertilizer by hand or hand operated broadcast spreader ensuring uniform coverage directly around each plant crown and not cast generally in open plant beds. Trees can be fertilized with spikes or granular. Areas will be watered thoroughly and promptly immediately following the fertilizer application.

Fertilizer shall be applied as directed by the CONTRACT ADMINISTRATOR or his/her designee.

Trees: The fertilizer should contain a ratio of approximately 1:1 Nitrogen and Potassium in a 50% slow release form. The fertilizer should also contain Manganese and a complete micronutrient amendment. (Examples: 13-3-13 or 8-2-10).

Palms: Palm fertilizer shall be a complete granular fertilizer specifically formulated for palms with a complete micronutrient amendment. Nitrogen and Potassium rates in the formulation should be equivalent and at least 50% of both elements should be available in slow release form. The blend should also contain magnesium at ½ the rate of potassium, including 1-2% Iron and Manganese, with trace amounts of Zinc, Copper, and Boron to prevent micronutrient deficiencies.

Ground Cover: Ground cover and hedges will be fertilized with a fertilizer containing a ratio of approximately 1:1 Nitrogen and Potassium in a 50% slow release form. The fertilizer should also contain Manganese and a complete micronutrient amendment. (Examples: 13-3-13 or 8-2-10)

- **PAY ITEM # 406 / FDOT PAY ITEM # NA / WATERING, F&I / UNIT KGAL**

  Description
  Unit price of this item includes full compensation for all work, labor, material and equipment necessary for plant water in compliance with Section 983 of the FDOT Standard Specifications.

- **PAY ITEM # 407 / FDOT PAY ITEM NA / ROOT BARRIER, F&I / UNIT LF**

  Description
  Unit price of the item listed above includes full compensation for all work, labor, material, and equipment required to furnish and install 2-foot deep, high density, polyethylene root barrier. Trench work must also be included in the unit price for this pay item.

- **PAY ITEM # 408 / FDOT PAY ITEM # NA / SPRINKLER HEADS POP-UP ROTATING, F&I / UNIT EA**

  Description
  Unit price of the pay item listed above includes full compensation for all work, labor, material, and equipment necessary for installation of sprinkler heads pop-up rotating of existing irrigation systems. Sprinkler heads must match heads used in the irrigation system under repair.

- **PAY ITEM # 409 / FDOT PAY ITEM # NA / 4" PVC PIPE, SCH. 40 / UNIT LF**

- **PAY ITEM # 410 / FDOT PAY ITEM # NA / 3" PVC PIPE, SCH. 40 / UNIT LF**

- **PAY ITEM # 411 / FDOT PAY ITEM # NA / 2" PVC PIPE, SCH. 40 / UNIT LF**

- **PAY ITEM # 412 / FDOT PAY ITEM # NA / 1" PVC PIPE, SCH. 40 / UNIT LF**

- **PAY ITEM # 413 / FDOT PAY ITEM # NA / 3/4" PVC PIPE, SCH. 40 / UNIT LF**

  Description
  Unit price of pay items 409 thru 413 listed above include full compensation for all work, labor, material, and equipment necessary for installation of specified PVC pipes including fittings, valves, connections, etc. Excavation, backfilling, and restoration will be paid under separate pay items.

- **PAY ITEM # 414 / FDOT PAY ITEM # NA / ROOT PRUNING/TREE TRIMMING CREW, 3-PERSON CREW, 4 HR MINIMUM CHARGE / UNIT HR**

  Description
  Unit price of this item includes full compensation for a minimum of a 3-person crew to perform root-pruning/tree trimming activities. All material, labor, and equipment are included under this pay item. Mobilization time is an incidental cost.

- **PAY ITEM # 415 / FDOT PAY ITEM # NA / TREE REMOVAL CREW, 3-PERSON CREW, 4 HR MINIMUM CHARGE / UNIT HR**

  Description
  Unit price of this item includes full compensation for a minimum of a 3-person crew. All labor, material, equipment, and legal disposal necessary for tree removal are included under this pay item. Unit price also must include:

  - Any required excavation activities.
  - Daily clean up and disposal of the plant material and any other incidental materials created during the plant removal operation such as, all tree trunks, limbs, leaves, twigs, sawdust and chips. Street and sidewalk areas shall be swept and all other areas shall be raked clean of debris generated through removal operations.
  - Removal and/or treatment of any existing bee hives, wasps, hornets, or other hazardous pests within the tree.
  - Utility location.
  - Stumps and all visible surface roots shall be mechanically ground out to a minimum depth of 8 inches below the surrounding grade. For locations where sidewalk and curb exist, the surrounding grade shall be established by means of an imaginary line extending from the top of the curb to the street side edge. All excess stump chips shall be physically removed from the sites. Sufficient stump chips shall be left on site to fill the resulting depression slightly above the surrounding grade (to allow for some settlement).

  All work shall be in compliance with ANSI A300 and Z133.1 Standards, city ordinances, and permit requirements. Mobilization time is an incidental cost.

- **PAY ITEM # 416 / FDOT PAY ITEM # NA / STUMP GRINDER, 2-PERSON CREW, 4 HR MINIMUM CHARGE / UNIT HR**

  Description
  Unit price of this item includes furnishing all materials, equipment, and labor required to perform stump grinder activities. This item also includes legal disposal of waste material. Mobilization time is an incidental cost.

- **PAY ITEM # 417 / FDOT PAY ITEM # NA / GRAFFITI REMOVAL, 100 SF MINIMUM CHARGE / UNIT SF**

- **PAY ITEM # 418 / FDOT PAY ITEM # NA / CERTIFIED ARBORIST / UNIT HR**

  Description
  Unit price of the pay item listed above includes full compensation for worked performed by a certified arborist. Proof of certification must be provided to the County Project Manager.

- **PAY ITEM # 419 / FDOT PAY ITEM # NA / ADDITIONAL LABORER / UNIT HR**

  Description
  Unit price of the pay item listed above includes full compensation for worked performed by a laborer. Any work requiring additional laborer must be approved by the County Project Manager.

- **PAY ITEM # 420 / FDOT PAY ITEM # NA / SKILLED LABORER / UNIT HR**

- **PAY ITEM # 421 / FDOT PAY ITEM # NA / MASTER ELECTRICIAN / UNIT HR**

  Description
  Unit price of the pay item listed above includes full compensation for worked performed by a master electrician. Proof of license must be provided to the County Project Manager.

- **PAY ITEM # 422 / FDOT PAY ITEM # NA / FDOT CERTIFIED SIGNAL TECHNICIAN, 2-PERSON CREW / UNIT HR**

  Description
  Unit price of the pay item listed above includes full compensation for work performed by a 2-person crew certified by FDOT to perform signal work. Proof of FDOT certified signal technician license must be provided to County Project Manager. All labor and equipment are included under this pay item. Required materials are not part of this pay item. Proper contract items must be used to pay for the material cost. Mobilization time is an incidental cost.

- **PAY ITEM # 423 / FDOT PAY ITEM # NA / DIVER (REGULAR TIME), 4 HOUR MINIMUM CHARGE / UNIT HR**

  Description
  Unit price of the pay item listed above includes full compensation for worked performed by a diver. Proof of Longshoreman's Insurance must be provided to the County Project Manager. This pay item is payable by the hour for commercial diver for unspecified underwater repairs or inspection. Hourly rate includes all normal and necessary equipment for diving and small repairs such as compressor, communications, hand tools and underwater camera equipment. Two divers may be used when one is the dive tender, any additional personnel will be paid as labor. Hours are payable for on-site including preparation and setup

- **PAY ITEM # 424 / FDOT PAY ITEM # NA / QUALIFIED CONSTRUCTION TRAINING QUALIFICATION PROGRAM (CTQP) ASPHALT PAVING LEVEL II TECHNICIAN / UNIT HR**

- **PAY ITEM # 425 / FDOT PAY ITEM # NA / TRENCH BOX UP TO 10' / UNIT ED**

- **PAY ITEM # 426 / FDOT PAY ITEM # NA / TRUCK MOUNTED ATTENUATOR (TMA), HOURS MINIMUM CHARGE / UNIT HR**

- **PAY ITEM # 427 / FDOT PAY ITEM # NA / SERVICE TRUCK & OPERATOR, PERSONNEL LIFT TO 35 FT HIGH ACCESS, 4 HR MINIMUM CHARGE / UNIT HR**

  Description
  Unit price of pay item listed above includes full compensation for the equipment and the qualified operator for such equipment described under the referenced pay item. Mobilization time is an incidental cost.

- **PAY ITEM # 428 / FDOT PAY ITEM # NA / BUCKET TRUCK & OPERATOR, 50 FT REACH, 4 HR MINIMUM CHARGE / UNIT HR**

  Description
  Unit price of pay item listed above includes full compensation for the equipment and the qualified operator for such equipment described under the referenced pay item. Mobilization time is an incidental cost.

- **PAY ITEM # 429 / FDOT PAY ITEM # NA / D3 OR D5 BACKHOE & OPERATOR / UNIT HR**
  Description
  Unit price of pay item listed above includes full compensation for the equipment and the qualified operator for such equipment described under the referenced pay item. Mobilization time is an incidental cost.

- **PAY ITEM # 430 / FDOT PAY ITEM # NA / CRANE & OPERATOR, INSTALLATIONS LESS THAN 85 FT HIGH AND 22 TON, 4 HR MINIMUM CHARGE / UNIT HR**

  Description
  Unit price of pay item listed above includes full compensation for the equipment and the qualified operator for such equipment described under the referenced pay item. Mobilization time is an incidental cost.

- **PAY ITEM # 431 / FDOT PAY ITEM # NA / VAC TRUCK, 3-PERSON CREW, 4 HR MINIMUM CHARGE / UNIT HR**

  Description
  Unit price of pay item listed above includes full compensation for the equipment and a minimum of a 3-person crew, including a qualified operator, for such equipment described under the referenced pay item. Mobilization time is an incidental cost.

- **PAY ITEM # 432 / FDOT PAY ITEM # NA / SMALL ALL WHEEL DRIVE OUTDOOR VACUUM SWEEPER AND OPERATOR, FOR SIDEWALKS, PARKING LOTS, PARKS AND CONFINED AREAS (4 HR MINIMUM CHARGE) / UNIT HR**

- **PAY ITEM # 433 / FDOT PAY ITEM # NA / MECHANICAL ROADWAY SWEEPER AND OPERATOR (4 HR MINIMUM CHARGE) / UNIT HR**

- **PAY ITEM # 434 / FDOT PAY ITEM # NA / HYDRO MOWER AND OPERATOR, UP TO 20 LF DECK (4 HRS MINIMUM CHARGE) / UNIT HR**

- **PAY ITEM # 435 / FDOT PAY ITEM # NA / SKID STEER LOADER & OPERATOR, 1,850 LB MINIMUM, 4 HR MINIMUM CHARGE / UNIT HR**

  Description
  Unit price of pay item listed above includes full compensation for the equipment and the qualified operator for such equipment described under the referenced pay item. Mobilization time is an incidental cost.

- **PAY ITEM # 436 / FDOT PAY ITEM # NA / GRAPPLE TRUCK/SELF LOADER AND OPERATOR, SINGLE AXLE, 16 CUBIC YARDS MINIMUM CAPACITY (4 HRS MINIMUM CHARGE) / UNIT HR**

- **PAY ITEM # 437 / FDOT PAY ITEM # NA / DOZER D3 & OPERATOR, 4 HR MINIMUM CHARGE / UNIT HR**

- **PAY ITEM # 438 / FDOT PAY ITEM # NA / DOZER D4 & OPERATOR, 4 HR MINIMUM CHARGE / UNIT HR**

- **PAY ITEM # 439 / FDOT PAY ITEM # NA / DOZER D5 & OPERATOR, 4 HR MINIMUM CHARGE / UNIT HR**

  Description
  Unit price of pay items 437 thru 439 listed above include full compensation for the equipment and the qualified operator for such equipment described under the referenced pay item. Mobilization time is an incidental cost.

- **PAY ITEM # 440 / FDOT PAY ITEM # NA / EXCAVATOR 30,000 LB & OPERATOR, 4 HR MINIMUM CHARGE / UNIT HR**

- **PAY ITEM # 441 / FDOT PAY ITEM # NA / EXCAVATOR 75,000 LB & OPERATOR, 4 HR MINIMUM CHARGE / UNIT HR**

  Description
  Unit price of pay items 440 and 441 listed above include full compensation for the equipment and the qualified operator for such equipment described under the referenced pay item. Mobilization time is an incidental cost.

- **PAY ITEM # 442 / FDOT PAY ITEM # NA / VIBRATORY ROLLER 5 TON & OPERATOR, 4 HR MINIMUM CHARGE / UNIT HR**

- **PAY ITEM # 443 / FDOT PAY ITEM # NA / VIBRATORY ROLLER 10 TON & OPERATOR, 4 HR MINIMUM CHARGE / UNIT HR**

  Description
  Unit price of pay items 442 and 443 listed above include full compensation for the equipment and the qualified operator for such equipment described under the referenced pay item. Mobilization time is an incidental cost.

- **PAY ITEM # 444 / FDOT PAY ITEM # NA / BARGE & OPERATOR, 31 FT LENGTH MINIMUM, 4 HR MINIMUM CHARGE / UNIT HR**

  Description
  Unit price of pay item listed above include full compensation for the equipment and the qualified operator for such equipment described under the referenced pay item. Mobilization time is an incidental cost. This pay item is payable by the hour for rental/use of a barge with one man to run spuds or tend lines. Barge must be minimum length of 31 FT and US Coast Guard approved vessel. Item should only be used when requested.

- **PAY ITEM # 445 / FDOT PAY ITEM # NA / BARGE WITH CRANE & OPERATOR, 20 TON RATED, 4 HR MINIMUM CHARGE / UNIT HR**

  Description
  Unit price of pay item listed above include full compensation for the equipment and the qualified operator for such equipment described under the referenced pay item. Mobilization time is an incidental cost. This pay item is payable by the hour for rental/use of a barge with minimum 20 ton

crane and two men to run spuds or tend lines and crane operator. Barge must be minimum length of 31 FT and US Coast Guard approved vessel. Item should only be used when requested.

- **PAY ITEM # 446 / FDOT PAY ITEM # NA / BOAT/WATER CRAFT WITH MOTOR, 30 FT LENGTH MAXIMUM, 4 HR MINIMUM CHARGE / UNIT HR**

  Description
  Unit price of pay item listed above include full compensation for the equipment and the qualified operator for such equipment described under the referenced pay item. Mobilization time is an incidental cost. This pay item is payable by the hour for rental/use of a boat/watercraft work vessel with one man to operate. Payment for this item will be used for vessel to maximum length of 30 FT that is US Coast Guard approved. Item should only be used when requested.

- **PAY ITEM # 447 / FDOT PAY ITEM # NA / DUMP TRUCK & OPERATOR, SINGLE-AXLE, 5 CY MINIMUM CAPACITY, 4 HR MINIMUM CHARGE / UNIT HR**

  Description
  Unit price of pay item listed above includes full compensation for the equipment and the qualified operator for such equipment described under the referenced pay item. Mobilization time is an incidental cost.

- **PAY ITEM # 448 / FDOT PAY ITEM # NA / DUMP TRUCK & OPERATOR, TRI-AXLE, 16 CY MINIMUM CAPACITY, 4 HR MINIMUM CHARGE / UNIT HR**

  Description
  Unit price of pay item listed above includes full compensation for the equipment and the qualified operator for such equipment described under the referenced pay item. Mobilization time is an incidental cost.

- **PAY ITEM # 449 / FDOT PAY ITEM # NA / TRASH TRUCK RENTAL & OPERATOR, 16 YD MINIMUM VOLUME, 4 HR MINIMUM CHARGE / UNIT HR**

  Description
  Unit price of pay item listed above includes full compensation for the equipment and the qualified operator for such equipment described under the referenced pay item. Mobilization time is an incidental cost.

- **PAY ITEM # 450 / FDOT PAY ITEM # NA / PORTABLE TOILET, SINGLE STALL / UNIT WEEK**

  Description
  Unit price of pay item listed above include full compensation for all work, labor, material, and equipment necessary for delivery, installation, maintenance, and removal.

- **PAY ITEM # 452 / FDOT PAY ITEM # 630-2-12 / CONDUIT, FURNISH & INSTALL, DIRECTIONAL BORE, 6" TO < 12" / UNIT LF**

- **PAY ITEM # 453 / FDOT PAY ITEM # 630-2-12 / CONDUIT, FURNISH & INSTALL, DIRECTIONAL BORE, 12" TO < 18" / UNIT LF**

- **PAY ITEM # 454 / FDOT PAY ITEM # 630-2-12 / CONDUIT, FURNISH & INSTALL, DIRECTIONAL BORE, 18" TO < 24" / UNIT LF**

- **PAY ITEM # 455 / FDOT PAY ITEM # 630-2-12 / CONDUIT, FURNISH & INSTALL, DIRECTIONAL BORE, 24" TO < 36" / UNIT LF**

- **PAY ITEM # 456 / FDOT PAY ITEM # 630-2-12 / CONDUIT, FURNISH & INSTALL, DIRECTIONAL BORE, 36" TO < 48" / UNIT LF**

- **PAY ITEM # 457 / FDOT PAY ITEM # 630-2-12 / CONDUIT, FURNISH & INSTALL, DIRECTIONAL BORE, 48" TO < 60" / UNIT LF**

- **PAY ITEM # 458 / FDOT PAY ITEM # 630-2-12 / CONDUIT, FURNISH & INSTALL, DIRECTIONAL BORE, > 60" / UNIT LF**

  Description
  Unit price of pay items 452 thru 458 listed above include full compensation for all work, labor, material, and equipment necessary for furnishing and install conduit described in FDOT Standard Specifications Section 630. For lighting, signal, and communications installations price and payment shall include furnish and install of conduit. The material to be used for this bid item shall meet Broward County Traffic Engineering Division Signalization Equipment Requirements. The equipment requirements can be obtained on the following website: http://www.broward.org/Traffic/Pages/Publications.aspx.

- **PAY ITEM # 465 / FDOT PAY ITEM # NA / PULL & SPLICE BOX, 13" x 24" COVER SIZE, TIER 22 / UNIT EA**

- **PAY ITEM # 466 / FDOT PAY ITEM # NA / WATER METER BOX / UNIT EA**

- **PAY ITEM # 479 / FDOT PAY ITEM # NA / PEDESTRIAN SIGNAL, LED, 1 DIRECTION / UNIT AS**

- **PAY ITEM # 480 / FDOT PAY ITEM # NA / PEDESTRIAN SIGNAL, LED, 2 DIRECTIONS / UNIT AS**

  Description
  Unit price of the items 479 and 480 listed above include full compensation for all work, labor, material, equipment, and incidentals described in FDOT Standard Specifications Section 653.

- **PAY ITEM # 487 / FDOT PAY ITEM # 700-1-11 / SINGLE POWDER COATED POST SIGN, GROUND MOUNT, UP TO 12 SF / UNIT AS**

- **PAY ITEM # 488 / FDOT PAY ITEM # 700-1-11 / SINGLE POWDER COATED POST SIGN, GROUND MOUNT, SLIP BASE ONLY, UP TO 12 SF / UNIT AS**

- **PAY ITEM # 491 / FDOT PAY ITEM # 700-1-12 / SINGLE POWDER COATED POST SIGN, GROUND MOUNT, 12-20 SF / UNIT AS**

- **PAY ITEM # 492 / FDOT PAY ITEM # 700-1-12 / SINGLE POWDER COATED POST SIGN, GROUND MOUNT, SLIP BASE ONLY, 12-20 SF / UNIT AS**

- **PAY ITEM # 495 / FDOT PAY ITEM # 700-1-13 / SINGLE POWDER COATED POST SIGN, GROUND MOUNT, 21-30 SF / UNIT AS**

- **PAY ITEM # 496 / FDOT PAY ITEM # 700-1-13 / SINGLE POWDER COATED POST SIGN, GROUND MOUNT, SLIP BASE ONLY, 21-30 SF / UNIT AS**

- **PAY ITEM # 499 / FDOT PAY ITEM # 700-1-14 / SINGLE POWDER COATED POST SIGN, GROUND MOUNT, 31+ SF / UNIT AS**

- **PAY ITEM # 500 / FDOT PAY ITEM # 700-1-14 / SINGLE POWDER COATED POST SIGN, GROUND MOUNT, SLIP BASE ONLY, 31+ SF / UNIT AS**

  Description
  Unit price of the item 487, 488, 491, 492, 495, 496, 499, and 500 listed above includes full compensation all work, labor, material, and equipment necessary to properly complete the work. All parts and materials shall conform to the latest editions of the FDOT Design Standards Index 11860, and FDOT Basis of Estimate Manual, pay item 700-1-AB.

- **PAY ITEM # 511 / FDOT PAY ITEM # NA / SIGN EXISTING- REMOVE, SPAN WIRE / UNIT AS**

- **PAY ITEM # 512 / FDOT PAY ITEM # NA / SIGN EXISTING- REMOVE, BRIDGE MOUNTED / UNIT AS**

- **PAY ITEM # 513 / FDOT PAY ITEM # NA / SIGN EXISTING- RELOCATE, SPAN WIRE / UNIT AS**

- **PAY ITEM # 514 / FDOT PAY ITEM # NA / SIGN EXISTING- RELOCATE, BRIDGE MOUNTED / UNIT AS**

- **PAY ITEM # 515 / FDOT PAY ITEM # NA / SIGN PANELS, 15 OR LESS / UNIT EA**

- **PAY ITEM # 516 / FDOT PAY ITEM # NA / SIGN PANELS, 16-100 / UNIT EA**

- **PAY ITEM # 517 / FDOT PAY ITEM # NA / SIGN PANELS, RELOCATE, 15 OR LESS / UNIT EA**

- **PAY ITEM # 518 / FDOT PAY ITEM # NA / SIGN PANELS, RELOCATE, 16-100 / UNIT EA**

- **PAY ITEM # 519 / FDOT PAY ITEM # NA / SIGN PANELS, REMOVE / UNIT EA**

- **PAY ITEM # 520 / FDOT PAY ITEM # NA / SIGN FLASHING BEACON GROUND MOUNT / UNIT EA**

- **PAY ITEM # 521 / FDOT PAY ITEM # NA / SIGN FLASHING BEACON, OVERHEAD MOUNT / UNIT EA**

  Description
  Unit price of the pay items 511 thru 521 listed above include full compensation for all work, labor, material, equipment, and incidentals described in FDOT Standard Specifications Section 700.

- **PAY ITEM # 556 / FDOT PAY ITEM # NA / MINIMUM CHARGE FOR STRIPING FOR EACH PROJECT / UNIT EA**

  Description
  Unit price of the pay item listed above represents the minimum payment that the Contractor will receive for all the stripping activities per project. For example, if the summation of all stripping pay items is less than the unit price bid under this pay item, the Contractor will be paid a lump sum amount for all stripping activities per project equal to the unit price of this pay item. However, if the summation of all stripping pay items is greater than the unit price of this pay item, the Contractor will be paid the actual cost of each stripping pay item.

- **PAY ITEM # 571 / FDOT PAY ITEM # NA / GROUND ROD / UNIT LF**

  Description
  Unit price of the pay item listed above includes full compensation for all work, labor, material, and equipment necessary to install a ground rod per the latest edition of the Florida Building Code.

SUBCONTRACTORS/SUBCONSULTANTS/SUPPLIERS REQUIREMENT FORM

The completed and signed form(s) should be returned with the Vendor's submittal. If not provided with submittal, the Vendor must submit within three business days of County's request. Vendor may be deemed non-responsive for failure to fully comply within stated timeframes.

A. The Vendor shall submit a listing of all subcontractors, subconsultants and major material suppliers (firms), if any, and the portion of the contract they will perform. A major material supplier is considered any firm that provides construction material for construction contracts, or commodities for service contracts in excess of $50,000, to the Vendor.

B. If participation goals apply to the contract, only non-certified firms shall be identified on the form. A non-certified firm is a firm that is not listed as a firm for attainment of participation goals (ex. County Business Enterprise or Disadvantaged Business Enterprise), if applicable to the solicitation.

C. This list shall be kept up-to-date for the duration of the contract. If subcontractors, subconsultants or suppliers are stated, this does not relieve the Vendor from the prime responsibility of full and complete satisfactory performance under any awarded contract.

D. After completion of the contract/final payment, the Vendor shall certify the final list of non-certified subcontractors, subconsultants, and suppliers that performed or provided services to the County for the referenced contract.

E. The Vendor has confirmed that none of the recommended subcontractors, subconsultants, or suppliers' principal(s), officer(s), affiliate(s) or any other related companies have been debarred from doing business with Broward County or any other governmental agency.

If none, state "none" on this form. Use additional sheets as needed. Vendor should scan and upload any additional form(s) in BidSync.

---

1. Subcontracted Firm's Name:

-

Subcontracted Firm's Address:

Subcontracted Firm's Telephone Number:

-

Contact Person's Name and Position:

Contact Person's E-Mail Address:

Estimated Subcontract/Supplies Contract Amount:

Type of Work/Supplies Provided:

-

2. Subcontracted Firm's Name:

-

Subcontracted Firm's Address:

Subcontracted Firm's Telephone Number:

-

Contact Person's Name and Position:

Contact Person's E-Mail Address:

Estimated Subcontract/Supplies Contract Amount:

Type of Work/Supplies Provided:

-

3. Subcontracted Firm's Name:

Subcontracted Firm's Address:

Subcontracted Firm's Telephone Number:

Contact Person's Name and Position:

Contact Person's E-Mail Address:

Estimated Subcontract/Supplies Contract Amount:

Type of Work/Supplies Provided:

4. Subcontracted Firm's Name:

Subcontracted Firm's Address:

Subcontracted Firm's Telephone Number:

Contact Person's Name and Position:

Contact Person's E-Mail Address:

Estimated Subcontract/Supplies Contract Amount:

Type of Work/Supplies Provided:

I certify that the information submitted in this report is in fact true and correct to the best of my knowledge.

Authorized Signature/Name	**Title**	**Vendor Name**	**Date**

TRENCH SAFETY ACT REQUIREMENT FORM

The completed and signed form(s) should be returned with the Vendor's submittal. If not provided with submittal, the Vendor must submit within three business days of County's request. Vendor may be deemed non-responsive for failure to fully comply within stated timeframes.

Florida Trench Safety Act, Section 553.60, Florida Statutes, incorporates the Occupational Safety & Health Administration (OSHA) excavation safety standards, 29 C.F.R Section 1926.650, as Florida's own standards. The Trench Safety Act will apply to any individual project that has trenches in excess of 5 feet deep.

The Vendor, by virtue of the solicitation submission, affirms that the Vendor is aware of this Act, and will comply with all applicable trench safety standards, including any special shoring requirements, if applicable. Such assurance shall be legally binding on all persons employed by the Vendor and subcontractors.

The Vendor is also obligated to identify the anticipated method and cost of compliance with the applicable trench safety standards. The Vendor further identified the costs and methods summarized below: (fill in either Open-End or Fixed Contract section)

Open-end Contract:

Description	Unit of Measure	Unit Price	Method

Special Shoring, if applicable:	SQ. FT.		

Fixed Contract:

Description	Unit of Measure	Quantity	Unit Price	Ext. Price	Method

Special Shoring, if applicable:	SQ. FT.	Unit Price	Method

Total $

Authorized Signature/Name	**Title**	**Vendor Name**	**Date**

VENDOR QUESTIONNAIRE

Quotations and Invitations for Bids

The completed Vendor Questionnaire should be submitted with the solicitation response. If not submitted with solicitation response, it must be submitted within three business days of County's request. Failure to timely submit may affect may result in Vendor being deemed non-responsive.

If a response requires additional information, the Vendor should upload a written detailed response; each response should be numbered to match the question number. The completed questionnaire and attached responses will become part of the procurement record. It is imperative that the person completing the form be knowledgeable about the proposing Vendor's business and operations.

1. Legal business name:
2. Doing Business As/Fictitious Name (if applicable):
3. Federal Employer I.D. no. (FEIN):
4. Dun and Bradstreet No.:
5. Website address (if applicable):
6. Principal place of business address:
7. Office location responsible for this project:
8. Telephone no.:

   Fax no.:
9. Type of business (check appropriate box):
   - ☐ Corporation (specify the state of incorporation):
   - ☐ Sole Proprietor
   - ☐ Limited Liability Company (LLC)
   - ☐ Limited Partnership
   - ☐ General Partnership (State and County filled in)
   - ☐ Other – Specify
10. AUTHORIZED CONTACT(S) FOR YOUR FIRM:

    Name:

    Title:

    E-mail:

    Telephone No.:

    Name:

    Title:

    E-mail:

    Telephone No.:

Generic e-mail address for purchase orders:

(Broward County auto distributes purchase orders from its financial system. To ensure a firm receives a purchase order, it is suggested a company accessible e-mail address is used.)

11. List name and title of each principal, owner, officer, and major shareholder:
    a)
    b)
    c)
    d)
12. Affiliated Entities of the Principal(s): List the names and addresses of "affiliated entities" of the Vendor's principal(s) over the last five (5) years (from the solicitation opening deadline) that have acted as a prime Vendor with the County. Affiliated entities of the principal(s) are those entities related to the vendor by the sharing of stock or other means of control, including but not limited to a subsidiary, parent or sibling entity.
    a)
    b)
    c)
    d)
13. Has your firm, its principals, officers or predecessor organization(s) been debarred or suspended by any government entity within the last three years? If yes, specify details in an attached written response. ☐ Yes ☐ No
14. Has your firm, its principals, officers or predecessor organization(s) ever been debarred or suspended by any government entity? If yes, specify details in an attached written response, including the reinstatement date, if granted. ☐ Yes ☐ No
15. Specify the type of services or commodities your firm offers:
16. How many years has your firm been in business while providing the services and/or products offered within this solicitation?
17. Is your firm's business regularly engaged in and routinely selling the product(s) or services offered within this solicitation? ☐ Yes ☐ No
18. Does your firm affirm that it is currently authorized by the manufacturer as a dealer/seller of the product(s) offered herein, and warranty offered is the manufacturer's warranty with Broward County recorded as the original purchaser? The County reserves the right to verify prior to a recommendation of award. ☐ Yes ☐ No N/A (if service) ☐
19. Has your firm ever failed to complete any services and/or delivery of products during the last three (3) years? If yes, specify details in an attached written response. ☐ Yes ☐ No
20. Is your firm or any of its principals or officers currently principals or officers of another organization? If yes, specify details in an attached written response. ☐ Yes ☐ No
21. Have any voluntary or involuntary bankruptcy petitions been filed by or against ☐ Yes ☐ No

your firm, its parent or subsidiaries or predecessor organizations during the last three years? If yes, specify details in an attached written response.

22. Has your firm's surety ever intervened to assist in the completion of a contract or have Performance and/or Payment Bond claims been made to your firm or its predecessor's sureties during the last three years? If yes, specify details in an attached a written response, including contact information for owner and surety company. ☐ Yes ☐ No

23. If requested, will your firm extend the same price, terms and conditions to other governmental entities during the period covered by this contract? ☐ Yes ☐ No

24. Would your firm accept a Visa credit card as payment from Broward County, with no additional fees or change to bid price? Procurement Contract must be approved and designated for procurement card (p-card) by Director of Purchasing for use prior to ordering. ☐ Yes ☐ No

25. Living Wage solicitations only: In determining what, if any, fiscal impacts(s) are a result of the Ordinance for this solicitation, provide the following for informational purposes only. Response is not considered in determining the award of this contract.

Living Wage had an effect on the pricing ☐Yes ☐ No

If yes, Living Wage increased the pricing by _____% or decreased the pricing by _____%.

26. Non-Collusion Certification: Vendor shall disclose, to their best knowledge, any Broward County officer or employee, or any relative of any such officer or employee as defined in Section 112.3135 (1) (c), Florida Statutes, who is an officer or director of, or has a material interest in, the Vendor's business, who is in a position to influence this procurement. Any Broward County officer or employee who has any input into the writing of specifications or requirements, solicitation of offers, decision to award, evaluation of offers, or any other activity pertinent to this procurement is presumed, for purposes hereof, to be in a position to influence this procurement. Failure of a Vendor to disclose any relationship described herein shall be reason for debarment in accordance with the provisions of the Broward County Procurement Code.

Select One:

☐ Vendor certifies that this offer is made independently and free from collusion; or

☐ Vendor is disclosing names of officers or employees who have a material interest in this procurement and is in a position to influence this procurement. Vendor must include a list of name(s), and relationship(s) with its submittal.

Questions 27 - 30 are only applicable to **service contracts** or a **construction contracts** (repair, maintain or furnish and install) solicitations:

27. What similar on-going contracts is your firm currently working on? If additional space is required, provide on separate sheet.

28. Has your firm completely inspected the project site(s) prior to submitting response? ☐ Yes ☐ No

29. Will your firm need to rent or purchase any equipment for this contract? If yes, please specify details in an attached a written response. ☐ Yes ☐ No

30. What equipment does your firm own that is available for this contract?

31. Provide at least three (3) individuals, corporations, agencies, or institutions for which your firm has completed work of a similar nature or in which your firm sold similar commodities in the past three (3) years. Contact persons shall have personal knowledge of the referenced project/contract. Only one (1) Broward County Board of County Commissioners agency reference may be submitted. If any of the following references are inaccessible or not relevant, additional references may be requested by the County.

Reference 1:

Scope of Work:

Contract/Project Title:

Agency:

Contact Name/Title:

Contact Telephone:

Email:

Contract/Project Dates (Month and Year):

Contract Amount:

Reference 2:

Scope of Work:

Contract/Project Title:

Agency:

Contact Name/Title:

Contact Telephone:

Email:

Contract/Project Dates (Month and Year):

Contract Amount:

Reference 3:

Scope of Work:

Contract/Project Title:

Agency:

Contact Name/Title:

Contact Telephone:

Email:

Contract/Project Dates (Month and Year):

Contract Amount:

Workforce Investment Program Requirements:

A. In accordance with Broward County Workforce Investment Program, Administrative Code, Section 19.211, the Workforce Investment Program (Program) this solicitation is a covered contract if the open-end contract award value exceeds $500,000 per year or if the individual project value exceeds $500,000 under a fixed-term contract. The Program encourages Vendors to utilize CareerSource Broward (CareerSouce) and their contract partners as a first source for employment candidates for work on County-funded projects, and encourages investment in Broward County economic development through the hiring of economically disadvantaged or hard-to-hire individuals.

B. Compliance with the Program, including compliance with First Source Referral and the Qualifying New Hires goals, is a matter of responsibility. Vendor should submit the **Workforce Investment Program Certification Form** with its response. If not provided with solicitation submittal, the Vendor must supply within three business days of County's request. Vendor may be deemed non-responsible for failure to comply within stated timeframes.

C. The following is a summary of requirements contained in the Program. This summary is not all-inclusive of the requirements of the Program. If there is any conflict between the following summary and the language in the Program, the language in the Program shall prevail. In compliance with the Program, Vendor (and/or its subcontractors) shall agree to:

1. be bound to contractual obligations under the contract;
2. use good faith efforts to meet First Source Referral goal for vacancies that result from award of this contract;
3. publicly advertise any vacancies that are the direct result of this contract, exclusively with CareerSource for at least five (5) business days;
4. review qualifications of CareerSource's Qualified Referrals and use good faith efforts to interview Qualified Referrals that appear to meet the required qualifications;
5. use good faith efforts to hire Qualifying New Hires (as defined by the Program) for at least fifty percent (50%) of the vacancies (rounded up) that are the direct result of this contract;
6. obtain a hired worker's written certification, attesting to a status as a Qualifying New Hire, Economically Disadvantaged Worker, or Hard-to-Hire worker (if applicable);
7. retain records relating to Program requirements, including: records of all applicable vacancies; job order requests to CareerSource; qualified referral lists; and records of candidates interviewed and the outcome of the interviews.
8. provide to the County any documents and records demonstrating Vendor's compliance and good faith efforts to comply with the Program;
9. submit to the County an annual report by January 31st and within 30 days of contract completion or expiration; and
10. ensure that all of its subcontractors comply with the requirements of the Program.

D. Further information about the Program, Vendor's obligations, and the Qualifying New Hire's certification form may be obtained on the Office of Economic and Small Business Development website:

broward.org/econdev/Pages/WorkforceInvestmentProgram.aspx. Vendor is responsible for reading and understanding requirements of the Program.

E. Subcontractors: Vendor's subcontractors shall use good faith efforts to meet the First Source Referral and the Qualifying New Hires goals, in accordance with the Program. The Vendor shall include in any subcontracts a requirement that the all subcontractors comply with the Program requirements. The Vendor shall be responsible for compliance by any subcontractor with the Program as it applies to their subcontract.

F. Reporting: Vendor shall maintain and make available to County upon request all records documenting Vendor's compliance and its subcontractors' compliance with the requirements of the Program, and shall submit the required reports to the Contract Administrator annually by January 31 and within thirty (30) days after the conclusion of this contract. Failure to timely comply with reporting requirements shall constitute a material breach of this contract.

G. Evaluation: The Contract Administrator will document the Vendor's compliance and good faith efforts as part of the Vendor's Performance Evaluation.

H. Failure to demonstrate good faith efforts to meet the First Source Referral and the Qualifying New Hires goal shall constitute a material breach of this contract.

WORKFORCE INVESTMENT PROGRAM CERTIFICATION FORM

This form(s) should be returned with the Vendor's submittal. If not provided with solicitation submittal, the Vendor must supply information within three business days of County's request. Vendor may be deemed non-responsible for failure to comply within stated timeframes.

In accordance with the Workforce Investment Program:

_____ (Vendor) agrees to be bound to the contractual obligations of the Workforce Investment Program, Broward County Administrative Code Section 19.211, requiring our firm to use good faith efforts to meet the First Source Referral Goal and the Qualifying New Hires Goal.

The statement must be signed by an authorized signatory of the firm. Receipt of the signed statement from the Vendor is a matter of responsibility. A firm not offering an affirmative response in this regard will be found "non-responsible" to the solicitation and not eligible for further evaluation or award.

_____	_____	_____
AUTHORIZED SIGNATURE/NAME	TITLE	DATE