DRC
PZ24-12000019
02/05/2025

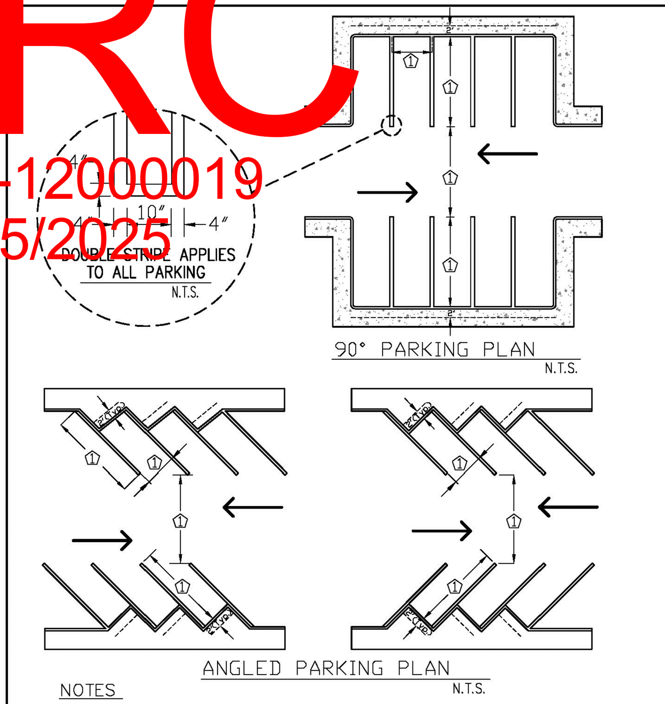

NOTES

1. INDICATED DIMENSION BY LOCAL ZONING ORDINANCE.
2. CURBING APPLIES TO ALL PARKING.
3. EACH SPACE SHALL BE DESIGNATED BY FOUR 4 INCH WIDE VISIBLE STRIPING CONSISTING OF WHITE PAINT OR AS APPROVED BY THE CITY.

ENGINEERING STANDARDS 2025

REVISIONS				
BY	DATE	ENGINEERING DIVISION CITY OF POMPANO BEACH	STANDARD PARKING SPACES	DATE: MAY 2022 DWG. NO. 300-3
		SCALE: N.T.S.		

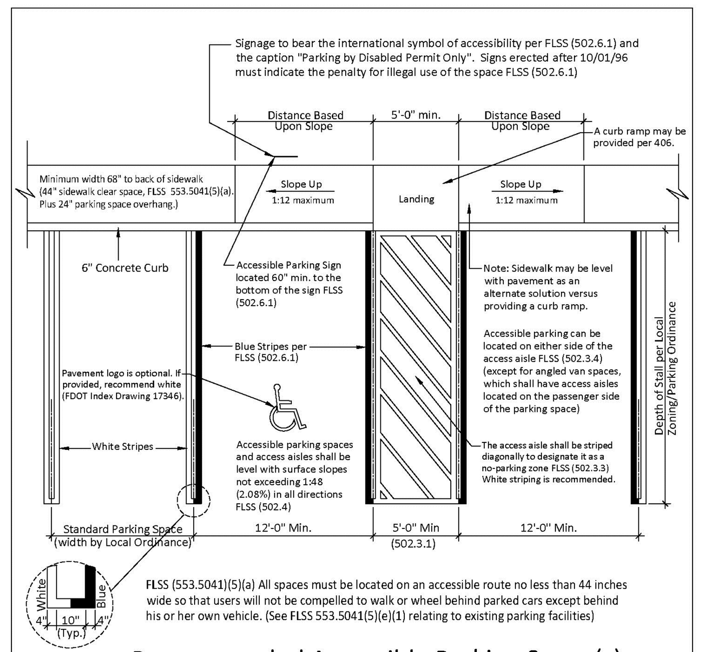

FLSS (553.5041)(5)(a) All spaces must be located on an accessible route no less than 44 inches wide so that users will not be compelled to walk or wheel behind parked cars except behind his or her own vehicle. (See FLSS 553.5041(5)(e)(1) relating to existing parking facilities)

Recommended Accessible Parking Space(s)
Design for Double Line Requirements N.T.S.

THIS TECHNICAL ASSISTANCE DOCUMENT IS INTENDED TO PROVIDE INFORMAL GUIDANCE AND DOES NOT CONSTITUTE A LEGAL INTERPRETATION OF STATUTORY OR REGULATORY CRITERIA.

ENGINEERING STANDARDS 2025

REVISIONS				
BY	DATE	ENGINEERING DIVISION CITY OF POMPANO BEACH	ACCESSIBLE PARKING SPACES	DATE: MAY 2022 DWG. NO. 300-4
		SCALE: N.T.S.		

POTABLE WATER MAIN
3' MIN.
REUSE WATER MAIN OR STORMWATER SEWERS OR STORMWATER FORCE MAINS

A MINIMUM HORIZONTAL SEPARATION 3' (OUTSIDE TO OUTSIDE), SHALL BE MAINTAINED BETWEEN POTABLE WATER MAINS AND STORMWATER SEWERS, STORMWATER FORCE MAINS AND REGULATED REUSE WATER MAINS.

POTABLE WATER MAIN
*3' MIN.
EXISTING OR PROPOSED VACUUM-TYPE SANITARY SEWER

A MINIMUM HORIZONTAL SEPARATION 3' (OUTSIDE TO OUTSIDE), SHALL BE MAINTAINED BETWEEN EXISTING OR PROPOSED VACUUM-TYPE SANITARY SEWER. * SEE NOTE D(1)(B).

POTABLE WATER MAIN
** 6' MIN.
SANITARY OR STORMWATER SEWERS AND FORCE MAINS

A MINIMUM HORIZONTAL SEPARATION OF 6' (OUTSIDE TO OUTSIDE), SHALL BE MAINTAINED BETWEEN POTABLE WATER MAINS AND EXISTING OR PROPOSED GRAVITY-OR PRESSURE TYPE SANITARY SEWER, WASTEWATER FORCE MAIN OR NOT REGULATED REUSE WATER MAIN. ** SEE NOTE D(1)(C).

MINIMUM HORIZONTAL SEPARATION REQUIREMENTS FOR POTABLE WATER, REUSE, STORMWATER AND SEWER LINES

ENGINEERING STANDARDS 2025

REVISIONS				
BY	DATE	ENGINEERING DIVISION CITY OF POMPANO BEACH	MIN. HORIZONTAL SEPARATION FOR SANITARY SEWER	DATE: JUNE 2022 DWG. NO. 209-1
S.S.	01/30/12	SCALE: N.T.S.		

INLET: GASKETED BELL - SDR 35 PVC

Base Casting is ASTM A-48 Class 30 Cast Iron (Various Contours available to fit 6.275" - 30.00" O.D. Mains)

PVC Adapter is an ASTM D3034, SDR-35 Gasketed Bell

Adapter is cemented permanently in place with two-part urethane adhesive

Base of Saddle is dip-coated in a Waterbased Bituminous Coating

Strap is 24 ga. x 2.5" wide Type 304 Stainless Steel

Strap Pins are .75" dia. Type 303 Stainless Steel

T-Bolts are .375" - 16 Type 304 Stainless Steel

Nuts and Washers are Type 18-8 Stainless Steel

O-Ring is ASTM C-361-77 Tubular Polyisoprene

4" inlet requires a 4" dia. Tap in the Sewer Main

6" inlet requires a 6" dia. Tap in the Sewer Main (Sewer Main must be at least 8" dia.)

Note: This Dwg. supercedes Dwg. No. R-3408-D2

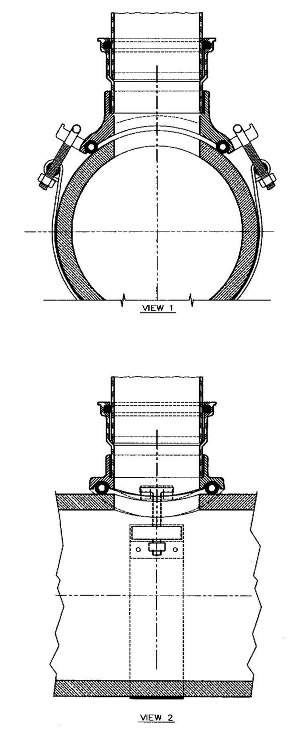

TEE GRAVITY SEWER SADDLE
TO BE USED WHEN A SEWER MAIN HAS BEEN LINED WITH A CURED IN PLACE MATERIAL.

ENGINEERING STANDARDS 2025

REVISIONS				
BY	DATE	ENGINEERING DIVISION CITY OF POMPANO BEACH	TEE GRAVITY SEWER SADDLE	DATE: MAY 2022 DWG. NO. 201-1
S.S.	11/23/16	SCALE: N.T.S.		

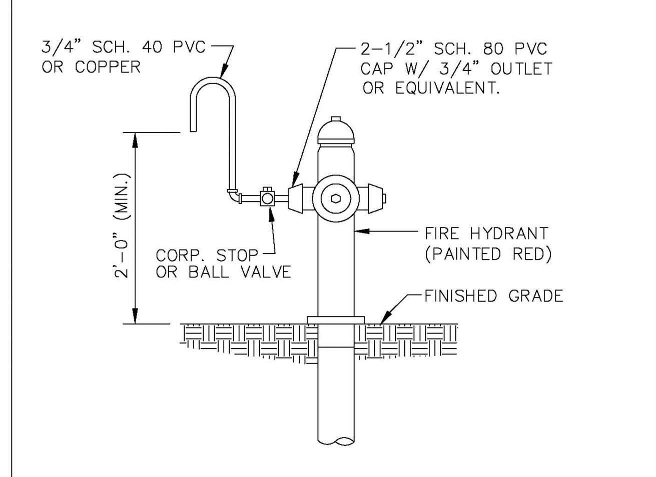

SAMPLE POINT (HYDRANT)

ALL POMPANO BEACH HYDRANTS SHALL BE PAINTED RED.

ALL D.I.P. TO BE PAINTED BLUE ON TOP HALF OF PIPE.

ENGINEERING STANDARDS 2025

REVISIONS				
BY	DATE	ENGINEERING DIVISION CITY OF POMPANO BEACH	SAMPLE POINT (HYDRANT)	DATE: MAY 2022 DWG. NO. 101-1
S.S.	04-2005	SCALE: N.T.S.		

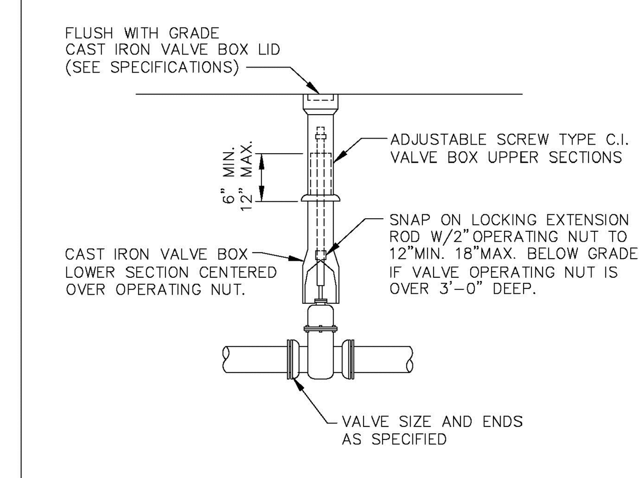

GATE OR PLUG VALVE SETTING

USE MEGALUGS AT ALL PIPE JOINTS

ALL D.I.P. TO BE PAINTED BLUE ON TOP HALF OF PIPE.

ENGINEERING STANDARDS 2025

REVISIONS				
BY	DATE	ENGINEERING DIVISION CITY OF POMPANO BEACH	GATE OR PLUG VALVE SETTINGS	DATE: MAY 2022 DWG. NO. 103-1
S.S.	04-2005	SCALE: N.T.S.		
T.W.	11-2007			

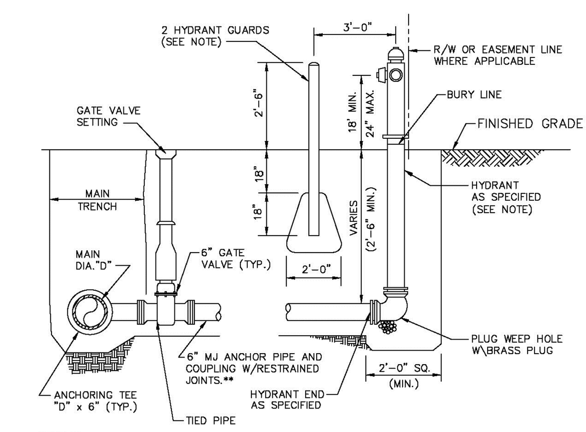

NOTES

HYDRANT GUARDS TO BE 6" DIAMETER GALVANIZED STEEL PIPE PAINTED YELLOW FILLED WITH CONCRETE. OMIT GUARDS IN LOCATIONS WHERE SIDEWALKS EXIST.

**USE 2-3/4" S.S. TIE RODS WHEN DISTANCE BETWEEN MAIN AND HYDRANT < 10'. TIE RODS WILL BE USED W/RESTRAINED JOINTS OR USE MEGALUGS AT ALL PIPE JOINTS

HYDRANTS INSTALLED ON EXISTING WATER MAINS MUST USE A MUELLER MJ DI TAPPING SLEEVE, H-615 OR APPROVED EQUAL.

HYDRANTS CONNECTED TO NEW MAINS SHALL BE CONNECTED USING A HYDRANT TEE.

ALL POMPANO BEACH HYDRANTS SHALL BE PAINTED RED.

TYPICAL FIRE HYDRANT ASSEMBLY

ENGINEERING STANDARDS 2025

REVISIONS				
BY	DATE	ENGINEERING DIVISION CITY OF POMPANO BEACH	FIRE HYDRANT ASSEMBLY	DATE: MAY 2022 DWG. NO. 109-1
T.W.	11-2007	SCALE: N.T.S.		
T.W.	10-2010			
S.S.	2-2012			
S.S.	11-2012			

POTABLE WATER MAIN
3' MIN.
REUSE WATER MAIN OR STORMWATER SEWERS OR STORMWATER FORCE MAINS

A MINIMUM HORIZONTAL SEPARATION 3' (OUTSIDE TO OUTSIDE), SHALL BE MAINTAINED BETWEEN POTABLE WATER MAINS AND STORMWATER SEWERS, STORMWATER FORCE MAINS AND REGULATED REUSE WATER MAINS.

POTABLE WATER MAIN
*3' MIN.
EXISTING OR PROPOSED VACUUM-TYPE SANITARY SEWER

A MINIMUM HORIZONTAL SEPARATION 3' (OUTSIDE TO OUTSIDE), SHALL BE MAINTAINED BETWEEN EXISTING OR PROPOSED VACUUM-TYPE SANITARY SEWER. * SEE NOTE D(1)(B).

POTABLE WATER MAIN
** 6' MIN.
SANITARY OR STORMWATER SEWERS AND FORCE MAINS

A MINIMUM HORIZONTAL SEPARATION OF 6' (OUTSIDE TO OUTSIDE), SHALL BE MAINTAINED BETWEEN POTABLE WATER MAINS AND EXISTING OR PROPOSED GRAVITY-OR PRESSURE TYPE SANITARY SEWER, WASTEWATER FORCE MAIN OR NOT REGULATED REUSE WATER MAIN. ** SEE NOTE D(1)(C).

MINIMUM HORIZONTAL SEPARATION REQUIREMENTS FOR POTABLE WATER, REUSE, STORMWATER AND SEWER LINES

ENGINEERING STANDARDS 2025

REVISIONS				
BY	DATE	ENGINEERING DIVISION CITY OF POMPANO BEACH	MIN. HORIZONTAL SEPARATION FOR POTABLE WATER	DATE: JAN. 2022 DWG. NO. 121-1
S.S.	01/12	SCALE: N.T.S.		

PROTECTION OF POTABLE WATER SUPPLY NOTES

A. GENERAL
IN ADDITION TO THESE REQUIREMENTS, ALL POTABLE WATER MAINS CONSTRUCTED IN THE VICINITY OF STORM SEWERS, SANITARY SEWERS OR FORCE MAINS SHALL COMPLY WITH THE APPLICABLE PROVISIONS OF FLORIDA ADMINISTRATIVE CODE CHAPTER 62-555, GREAT LAKES-UPPER MISSISSIPPI RIVER BOARD OF STATE SANITARY ENGINEERS (GLUMRB) "RECOMMENDED STANDARDS FOR WATER WORKS", AND GLUMRB "RECOMMENDED STANDARDS FOR WASTEWATER FACILITIES".

B. DEFINITIONS
FOR THE PURPOSES OF THIS SPECIFICATION, THE WORDS "OTHER PIPE" OR "OTHER PIPES" SHALL MEAN SANITARY SEWER MAIN, SEWAGE FORCE MAIN, STORMWATER MAIN OR ANY COMBINATION THEREOF.

C. CROSS CONNECTIONS PROHIBITED
THERE SHALL BE NO PHYSICAL CONNECTIONS BETWEEN A PUBLIC OR PRIVATE POTABLE WATER SUPPLY SYSTEM AND ANY OTHER PIPE OR APPURTENANCE THERETO WHICH WOULD PERMIT THE PASSAGE OF ANY WASTEWATER, POLLUTED WATER, OR ANY OTHER WATER INTO THE POTABLE SUPPLY. NO WATER PIPE SHALL PASS THROUGH OR COME INTO CONTACT WITH ANY PART OF A SANITARY SEWER MANHOLE OR STORMWATER MANHOLE.

D. RELATION OF OTHER PIPES TO POTABLE WATER MAINS

1. HORIZONTAL SEPARATION

A. NEW OR RELOCATED, UNDERGROUND WATER MAINS SHALL BE LAID TO PROVIDE A HORIZONTAL DISTANCE OF AT LEAST THREE FEET BETWEEN THE OUTSIDE OF THE WATER MAIN AND THE OUTSIDE OF ANY EXISTING OR PROPOSED STORM WATER, STORM WATER FORCE MAIN, OR PIPELINE CONVEYING REUSE WATER NOT REGULATED UNDER PART III OF CHAPTER 62-610,F.A.C.

B. NEW OR RELOCATED, UNDERGROUND WATER MAINS SHALL BE LAID TO PROVIDE A HORIZONTAL DISTANCE OF AT LEAST THREE FEET, AND PREFERABLY TEN FEET, BETWEEN THE OUTSIDE OF THE WATER MAIN AND THE OUTSIDE OF ANY EXISTING OR PROPOSED VACUUM-TYPE SANITARY SEWER.

C. NEW OR RELOCATED, UNDERGROUND WATER MAINS SHALL BE LAID TO PROVIDE A HORIZONTAL DISTANCE OF AT LEAST SIX FEET, AND PREFERABLY TEN FEET, BETWEEN THE OUTSIDE OF THE WATER MAIN AND THE OUTSIDE OF ANY EXISTING OR PROPOSED GRAVITY-OR PRESSURE-TYPE SANITARY SEWER, WASTEWATER FORCE MAIN, OR PIPELINE CONVEYING REUSE WATER NOT REGULATED UNDER CHAPTER 62-610, F.A.C. THE MINIMUM HORIZONTAL SEPARATION DISTANCE BETWEEN WATER MAINS AND GRAVITY TYPE SEWERS SHALL BE REDUCED TO THREE FEET WHERE THE BOTTOM OF THE WATER IS LAID AT LEAST SIX INCHES ABOVE THE TOP OF THE SEWER.

ENGINEERING STANDARDS 2025

REVISIONS				
BY	DATE	ENGINEERING DIVISION CITY OF POMPANO BEACH	POTABLE WATER SUPPLY NOTES	DATE: JAN. 2022 DWG. NO. 122-2
S.S.	01/12	SCALE: N.T.S.		

D. NEW OR RELOCATED, UNDERGROUND WATER MAINS SHALL BE LAID TO PROVIDE A HORIZONTAL DISTANCE OF AT LEAST TEN FEET BETWEEN THE OUTSIDE OF THE WATER MAIN AND ALL PARTS OF ANY EXISTING OR PROPOSED "ON-SITE SEWAGE TREATMENT AND DISPOSAL SYSTEM".

2. VERTICAL SEPARATION

A. NEW OR RELOCATED, UNDERGROUND WATER MAINS CROSSING ANY EXISTING OR PROPOSED GRAVITY-OR VACUUM-TYPE SANITARY SEWER OR STORM SEWER SHALL BE LAID SO THE OUTSIDE OF THE WATER MAIN IS AT LEAST SIX INCHES, AND PREFERABLY 12 INCHES, ABOVE OR AT LEAST 12 INCHES BELOW THE OUTSIDE OF THE OTHER PIPELINE. HOWEVER, IT IS PREFERABLE TO LAY THE WATER MAIN ABOVE THE OTHER PIPELINE.

B. NEW OR RELOCATED, UNDERGROUND WATER MAINS CROSSING ANY EXISTING OR PROPOSED PRESSURE-TYPE SANITARY SEWER, WASTEWATER OR STORM WATER FORCE MAIN, OR PIPELINE CONVEYING REUSE WATER SHALL BE LAID SO THE OUTSIDE OF THE WATER MAIN IS AT LEAST 12 INCHES, ABOVE OR BELOW THE OUTSIDE THE OTHER PIPELINE. HOWEVER, IT IS PREFERABLE TO LAY THE WATER MAIN ABOVE THE OTHER PIPELINE.

C. AT THE UTILITY CROSSINGS DESCRIBED IN PARAGRAPHS (A) AND (B) ABOVE, ONE FULL LENGTH OF WATER MAIN PIPE SHALL BE CENTERED ABOVE OR BELOW THE OTHER PIPELINE SO THE WATER MAIN JOINTS WILL BE AS FAR AS POSSIBLE FROM THE OTHER PIPELINE. ALTERNATIVELY, AT SUCH CROSSINGS, THE PIPES SHALL BE ARRANGED SO THAT ALL WATER MAIN JOINTS ARE AT LEAST THREE FEET FROM ALL JOINTS IN VACUUM-TYPE SANITARY SEWERS, STORM SEWERS, STORM WATER FORCE MAINS, OR PIPELINES CONVEYING REUSE WATER REGULATED UNDER PART III OF CHAPTER 62-610, F.A.C. AND AT LEAST SIX FEET FROM ALL JOINTS IN GRAVITY- OR PRESSURE-TYPE SANITARY SEWERS, WASTEWATER FORCE MAINS, OR PIPELINES CONVEYING REUSE WATER NOT REGULATED UNDER PART III OR CHAPTER 62-610, F.A.C.

WHERE THE HORIZONTAL CAN BEING LOCATED LESS THAT THE REQUIRED MINIMUM DISTANCES FROM JOINTS IN THE OTHER PIPELINE OR THE HORIZONTAL IS LESS THAT THREE FEET FROM ANOTHER PIPELINE OR THE UNDER GROUND WATER MAIN IS CROSSING ANOTHER PIPELINE AND IS LESS THAN THE REQUIRED MINIMUM VERTICAL DISTANCE FROM THE OTHER PIPELINE, THE CONTRACTOR SHALL CONTACT THE ENGINEER IMMEDIATELY FOR RECOMMENDED SOLUTIONS TO MEET THE FLORIDA OF DEPARTMENT OF ENVIRONMENTAL PROTECTION REQUIREMENTS PER CHAPTER 62-555, F.A.C.

PROTECTION OF POTABLE WATER SUPPLY NOTES

ENGINEERING STANDARDS 2025

REVISIONS				
BY	DATE	ENGINEERING DIVISION CITY OF POMPANO BEACH	POTABLE WATER SUPPLY NOTES	DATE: JAN. 2022 DWG. NO. 122-3
S.S.	01/12	SCALE: N.T.S.		

FIRE METERS - OS & Y VALVES, GASKETS & METER				
(NEPTUNE MACH 10 Ultrasonic Meter)				
SIZE	VALVES (2)	GASKETS (4)	METER w/ Strainer	TOTAL LENGTH
3" w/ 4" X 3" Reducer **	16"	1/2"	30" **	46 1/2"
4"	18"	1/2"	27 1/2"	46"
6"	21"	1/2"	33"	54 1/2"
8"	23"	1/2"	30"	53 1/2"
10"	26"	1/2"	41"	67 1/2"

2" MIN. TRAVEL

FIRE &/or Domestic Water SERVICE METERS - TEES, OS & Y VALVES, GASKETS & METERS					
(NEPTUNE MACH 10 Ultrasonic Meter)					
SIZE	TEES (2)	VALVES (2)	GASKETS (6)	Meter w/ Strainer	TOTAL LENGTH
3" w/ 4" X 3" Reducer **	3" X 3" - 22"	16"	3/4"	30" **	68 3/4"
4"	4" X 3" - 26"	18"	3/4"	27 1/2"	72 1/4"
6"	6" X 4" - 32"	21"	3/4"	33"	86 3/4"
8"	8" X 4" - 36"	23"	3/4"	30"	89 3/4"
10"	10" X 6" - 44"	26"	3/4"	41"	111 3/4"

*All fittings, valves and meters are flanged & all dimensions are from face of flange to face of flange.

NOTE:
PLEASE NOTE THAT WATER METERS 3" AND LARGER ARE SUBJECT TO AN APPROXIMATE ORDER LEAD TIME OF 60 TO 75 BUSINESS DAYS AFTER FULL PAYMENT. PLEASE CONTACT CUSTOMER SERVICE AT 954-786-4637 TO ARRANGE FOR METER PROCUREMENT AND INSTALLATION. LARGE METERS MUST BE AT MINIMUM ORDERED PRIOR TO INITIAL INSPECTIONS.

ENGINEERING STANDARDS 2025

REVISIONS				
BY	DATE	ENGINEERING DIVISION CITY OF POMPANO BEACH	METER INSTALL DIMENSION LIST	DATE: JAN. 2022 DWG. NO. 106-4
T.W.	02-2008	SCALE: N.T.S.		
S.S.	11-2016			
A.S.	01-2022			

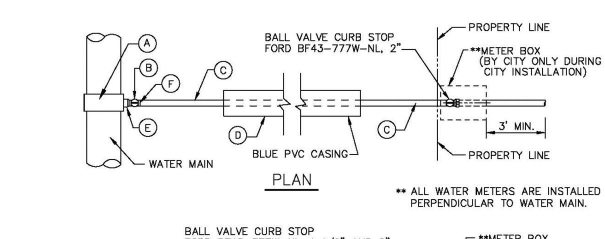

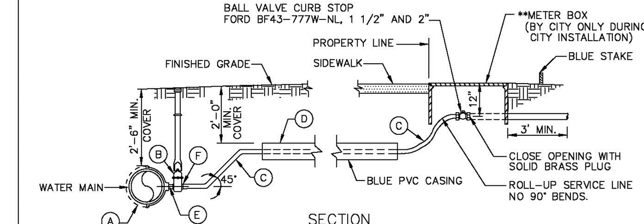

(A) 2" TAPPING SADDLE IRON PIPE THREADED FORD FC-202 OR EQUAL.
(B) 2" RESILIENT SEATED GATE VALVE CLOW F61-03 MUELLER A-23-60-8 2" OPERATING NUT BOXED TO GRADE - C.I. BOX
(C) 2" POLYETHYLENE BLUE
(D) 2 1/2" SCH. 40
(E) 2" X 3" BRASS NIPPLE
(F) 2" MIP COUPLING C-84-77 - PACK JOINT - CTS

TYPICAL 1 1/2" AND 2" WATER SERVICE

ENGINEERING STANDARDS 2025

REVISIONS				
BY	DATE	ENGINEERING DIVISION CITY OF POMPANO BEACH	TYPICAL 2" WATER SERVICE	DATE: APRIL 2022 DWG. NO. 107-2
S.S.	05-2011	SCALE: N.T.S.		
S.S.	05-2012			
S.S.	11-2018			
A.S.	08-2021			

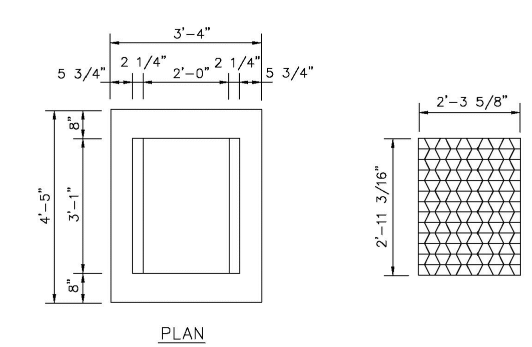

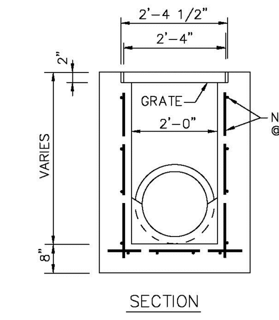

TYPE "C" INLET

RECOMMENDED MAXIMUM PIPE SIZE
2'-0" WALL-18" PIPE
3'-1" WALL-24" PIPE

ENGINEERING STANDARDS 2025

REVISIONS				
BY	DATE	ENGINEERING DIVISION CITY OF POMPANO BEACH	TYPE "C" INLET	DATE: JUNE 2022 DWG. NO. 400-1B
S.S.	09-11	SCALE: N.T.S.		

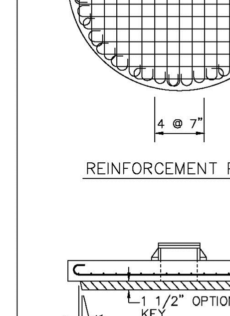

REINFORCING BARS @ 6" CENTERS BOTH WAYS EXCEPT MIDDLE BARS SHOWN @ 7" CENTERS. ALL BARS WITH ACI STANDARD HOOKS CANTED APPROXIMATELY 45°, OR EMBEDDED IN ACCORDANCE WITH THE SLAB REINFORCEMENT DETAIL SHOWN UNDER OPTIONAL CONSTRUCTION JOINT DETAILS, EXCEPT BARS AROUND MANHOLE OPENING SHALL BE HOOKED.

BAR SIZE	TOP DIAMETER
NO. 4	3'-6" & 4'
NO. 5	6'
NO. 6	7'

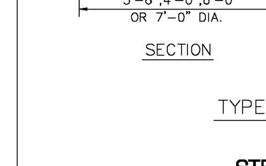

TYPE 7-NT (NON-TRAFFIC)

STRUCTURE TOP FOR MANHOLE AND JUNCTION BOX

ENGINEERING STANDARDS 2025

REVISIONS				
BY	DATE	ENGINEERING DIVISION CITY OF POMPANO BEACH	STRUCTURE TOP (TYPE 7-NT)	DATE: JUNE 2022 DWG. NO. 408-1
		SCALE: N.T.S.		

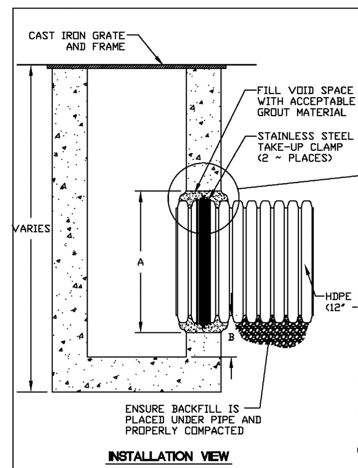

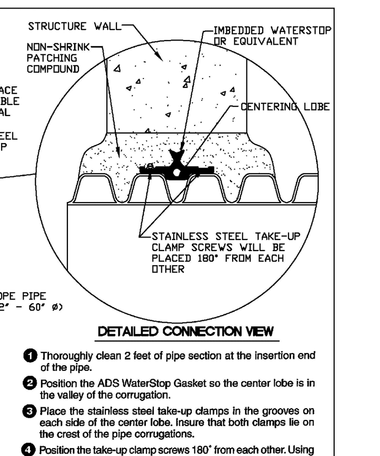

INSTALLATION RECOMMENDATIONS

PIPE SIZE (IN)	PIPE OD (IN) A-PROFILE	PIPE OD (IN) H-PROFILE	"A" MIN. HOLE ø (IN)	"B" MIN. DISTANCE PIPE INVERT TO STRUCTURE INVERT (IN)
12	14.5	14.2	19.00	3.7
15	17.6	17.8	23.00	4.0
18	21.2	21.5	26.50	4.2
24	27.8	28.4	33.25	4.5
30	35.1	35.5	40.50	5.2
36	41.1	41.4	47.00	5.5
42	47.7	48.0	53.00	5.7
48	53.6	54.0	59.00	5.7
60	66.3	67.3	72.00	6.4

1. Thoroughly clean 2 feet of pipe section at the insertion end of the pipe.
2. Position the ADS WaterStop Gasket so the center lobe is in the valley of the corrugation.
3. Place the stainless steel take-up clamps in the grooves on each side of the center lobe. Insure that both clamps lie on the crest of the pipe corrugations.
4. Position the take-up clamp screws 180° from each other. Using a torque ratchet or torque wrench, gradually tighten both screws of each clamp to 60 lbs./inch torque. Do not overtighten. A screw driver will not tighten clamps adequately.
5. Apply a good quality concrete bonding agent to the structure opening.
6. Insert pipe into the structure opening. Make sure that the ADS WaterStop is fully within the plane of the structure's wall. **If mortaring in place,** apply and compact non-shrink grout around the ADS WaterStop and between the pipe and the opening, taking care to fill the voids. Make sure that the ADS WaterStop Gasket does not contact the bare structure walls. **If pouring in place,** use concrete of sufficient slump to permit complete flow around the pipe and ADS WaterStop. Thoroughly vibrate all around the pipe and ADS WaterStop Gasket to complete compaction and to release any trapped air.
7. Allow concrete or mortar to fully cure before testing or backfilling. If the system is to be tested, testing should be completed prior to backfilling around the structure, following all recommendations and requirements of the test system manufacturer. Plug any vent holes in the N-12 pipe prior to testing.
8. Backfill the N-12 pipe following recommendations in ADS Product Note 3.115, *Installing N-12 Storm, Sanitary Sewer and Culvert Pipe.*

WATER STOP SEAL

ENGINEERING STANDARDS 2025

REVISIONS				
BY	DATE	ENGINEERING DIVISION CITY OF POMPANO BEACH	WATER STOP SEAL	DATE: MAY 2022 DWG. NO. 414-1
TCW	04-08	SCALE: N.T.S.		

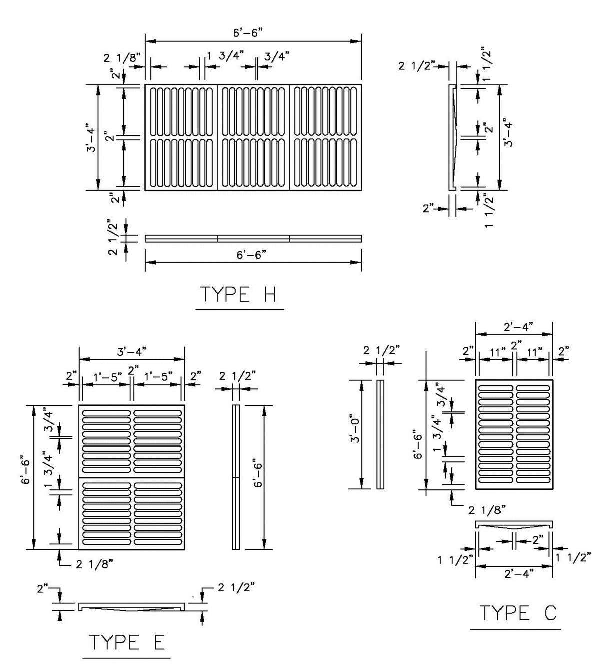

CAST IRON GRATES

ENGINEERING STANDARDS 2025

REVISIONS				
BY	DATE	ENGINEERING DIVISION CITY OF POMPANO BEACH	CAST IRON GRATES	DATE: JUNE 2022 DWG. NO. 410-1
		SCALE: N.T.S.		

Jan 02, 2025
H:\2024\FLB240130.00\CAD\DRAWINGS\PLAN SETS\CIVIL SITE PLANS\P-CIVL-CNDS-FLB240130.00-0A---->LAYOUT: C-901 DETL
AC

BOHLER//
SITE CIVIL AND CONSULTING ENGINEERING
LAND SURVEYING
PROGRAM MANAGEMENT
LANDSCAPE ARCHITECTURE
SUSTAINABLE DESIGN
PERMITTING SERVICES
TRANSPORTATION SERVICES

THE INFORMATION, DESIGN AND CONTENT OF THIS PLAN ARE PROPRIETARY AND SHALL NOT BE COPIED OR USED FOR ANY PURPOSE WITHOUT PRIOR WRITTEN AUTHORIZATION FROM BOHLER. ONLY APPROVED, SIGNED AND SEALED PLANS SHALL BE UTILIZED FOR CONSTRUCTION PURPOSES
© BOHLER

REVISIONS

REV	DATE	COMMENT	DRAWN BY / CHECKED BY

Sunshine 811
Call 811 or visit sunshine811.com two full business days before digging to have buried facilities located and marked.
Check positive response codes before you dig!

ISSUED FOR MUNICIPAL & AGENCY REVIEW & APPROVAL

THIS DRAWING IS INTENDED FOR MUNICIPAL AND/OR AGENCY REVIEW AND APPROVAL. IT IS NOT INTENDED AS A CONSTRUCTION DOCUMENT UNLESS INDICATED OTHERWISE.

PROJECT No.:	FLB240130.00-0A
DRAWN BY:	AC
CHECKED BY:	AS
DATE:	12/30/2024
CAD I.D.:	P-CIVL-CNDS

PROJECT:

PROP. SITE PLAN DOCUMENTS

FOR

POMPANO PICKLE, LLC

PROPOSED DEVELOPMENT

210-217 NE 3RD STREET
POMPANO BEACH, FL
BROWARD COUNTY

BOHLER//
1900 NW CORPORATE BOULEVARD
SUITE 101E
BOCA RATON, FLORIDA 33431
Phone: (561) 571-0280
Fax: (561) 571-0281
FLORIDA BUSINESS CERT. OF AUTH. No. 30780

ANDREW RONALD SAVAGE LICENSE No. 82408 STATE OF FLORIDA PROFESSIONAL ENGINEER
E=asavage@bohlereng.com, CN=Andrew Savage, O="BOHLER ENGINEERING FL, LLC", L=Boca Raton, S=Florida, SERIALNUMBER=MAS20240905693926, C=US
2025.01.02 11:01:19-05'00'
THIS ITEM HAS BEEN DIGITALLY SIGNED AND SEALED BY ANDREW RONALD SAVAGE, PE, ON THE DATE ADJACENT TO THE SEAL. PRINTED COPIES OF THIS DOCUMENT ARE NOT CONSIDERED SIGNED AND SEALED AND THE SIGNATURE MUST BE VERIFIED ON ANY ELECTRONIC COPIES.

SHEET TITLE:

CONSTRUCTION DETAILS

SHEET NUMBER:

C-901

ORG. DATE - 12/30/2024