CONSTRUCTION AGREEMENT

THIS AGREEMENT is dated _____ by and between **CITY OF POMPANO BEACH, FLORIDA** (hereinafter called OWNER) and **DBF CONSTRUCTION, LLC**, a Florida Limited Liability Company (hereinafter called CONTRACTOR).

OWNER and CONTRACTOR, in consideration of the mutual covenants hereinafter set forth, agree as follows:

Article 1. WORK

The project consists of the furnishing of all labor, equipment, and materials for furnishing and installing all tools, equipment, materials, supplies, and all labor, transportation, and related services.

The Project for which the Work under the Contract Documents may be the whole or only a part is generally described as follows: **RFP25-040 Non-Sewer Area C Sanitary Improvement Project**.

Article 2. ENGINEER

The Project has been designed by **Chen Moore and Associates,** who is hereinafter called ENGINEER and who is to act as OWNER'S representative, assume all duties and responsibilities, and have the rights and authority assigned to ENGINEER in the Contract Documents in connection with completion of the Work in accordance with the Contract Documents.

Article 3. CONTRACT TIME

The Work will be substantially completed within **320 days** from the date the Contract Time commences to run as provided in EXHIBIT "B" GENERAL CONDITIONS, and completed and ready for final payment in accordance with EXHIBIT "B" GENERAL CONDITIONS within **360 days** from the date the Contract Time commences to run.

Article 4. PRECONSTRUCTION PHASE REQUIREMENTS

Contractor shall be instructed to commence the Work by written instruction in the form of a Purchase Order issued by the OWNER's General Services Department and two or more Notices to Proceed issued by the Contract Administrator. The first Notice to Proceed and Purchase Order will not be issued until Contractor's submission to OWNER of all required documents and after execution of this Contract by both Parties. Preliminary work, including submission of a project schedule, schedule of values, submittals, submittal schedule, and other documents required for permitting, and performance of work that does not require permits, shall be commenced within ten (10) calendar days after the date of the first Notice to Proceed. Contractor shall have ten (10) days after receipt of signed and sealed contract drawings from Consultant to apply for construction permits to the applicable permitting authority. Issuance of all permits by the permitting authority shall be a condition precedent to the issuance of a second Notice to Proceed for all other Work. Except for the reimbursement of permit application fees as may be provided in the Contract Documents, Contractor shall not be entitled to compensation of any kind during the permitting process. The Work to be performed pursuant to the second Notice to Proceed shall be commenced within ten (10) calendar days of the Project Initiation Date specified in the second Notice to Proceed.

Article 5. LIQUIDATED DAMAGES

OWNER and CONTRACTOR recognize that time is of the essence of the Agreement and that OWNER will suffer financial loss if the Work is not completed within the times specified in Article 3, above, plus any extensions thereof allowed in accordance with EXHIBIT "B" GENERAL CONDITIONS. They also recognize the delays, expense, and difficulties involved in proving in a legal or arbitration proceeding the actual loss suffered by OWNER if the Work is not completed on time. Accordingly, instead of requiring any such proof, OWNER and CONTRACTOR agree that as liquidated damages for delay (but not as a penalty) CONTRACTOR shall pay OWNER Five Hundred and 00/100 dollars ($500.00) for each day that expires after the time specified in Article 3 for Substantial Completion, plus any monies paid by the OWNER to the ENGINEER for additional engineering and inspection services until the Work is substantially complete. After Substantial Completion, if CONTRACTOR shall neglect, refuse or fail to complete the remaining Work within the Contract Time or any proper extension thereof granted by OWNER, CONTRACTOR shall pay the OWNER Three Hundred and 00/100 dollars ($300.00) for each day that expires after the time specified in Article 3 for completion of Work and readiness for final payment, plus any monies paid by the OWNER to the ENGINEER for additional engineering and inspection services.

Article 6. CONTRACT PRICE

OWNER shall pay CONTRACTOR for completion of the Work in accordance with the Contract Documents in current funds as follows:

The total sum of the work shall not exceed **Four Million Eight Hundred Sixteen Thousand Seven Hundred Seventy-Three dollars and Eighty-Nine Cents ($4,816,773.89).** See BID PROPOSAL **RFP25-040** attached for line-item pricing.

Article 7. PAYMENT PROCEDURES

7.1 CONTRACTOR shall submit Applications for Payment in accordance with EXHIBIT "B" GENERAL CONDITIONS. Applications for Payment will be processed by ENGINEER as provided in EXHIBIT "B" GENERAL CONDITIONS.

7.2 Progress Payments. OWNER shall make progress payments on account of the Contract Price on the basis of CONTRACTOR'S Applications for Payment as recommended by ENGINEER, on or about the 15th day of each month during construction as provided below. All progress payments will be on the basis of the progress of the Work measured by the schedule of values established in EXHIBIT "B" GENERAL CONDITIONS (and in the case of Unit Price Work based on the number of units completed) or, in the event there is no schedule of values, as provided in the General Requirements.

7.2.1 Prior to Substantial Completion, progress payments will be made in an amount equal to the percentage indicated below, but, in each case, less the aggregate of payments previously made and such amounts as ENGINEER

shall determine, or OWNER may withhold, in accordance with EXHIBIT "B" GENERAL CONDITIONS.

5% of Work completed will be withheld by OWNER as retainage.

7.2.2 Upon Substantial Completion, in an amount sufficient to increase total payments to CONTRACTOR to 95% of the Contract Price, less such amounts as ENGINEER shall determine, or OWNER may withhold, in accordance with EXHIBIT "B" GENERAL CONDITIONS.

7.3 Final Payment. Upon final completion and acceptance of the Work in accordance with EXHIBIT "B" GENERAL CONDITIONS, OWNER shall pay the remainder of the Contract Price as recommended by ENGINEER as provided in said EXHIBIT "B" GENERAL CONDITIONS.

Article 8. CONTRACTOR'S REPRESENTATIONS

In order to induce OWNER to enter into this Agreement, CONTRACTOR makes the following representations:

8.1 CONTRACTOR has familiarized itself with the nature and extent of the Contract documents.

Work, site, locality, and all local conditions and Laws and Regulations that in any manner may affect cost, progress, performance, or furnishing of the Work.

8.2 CONTRACTOR has studied carefully all reports of explorations and tests of subsurface conditions and drawings of physical conditions which are identified in the bid, and accepts the determination set forth in the bid of the extent of the technical data contained in such reports and drawings upon which CONTRACTOR is entitled to reply.

8.3 CONTRACTOR has obtained and carefully studied (or assumes responsibility for obtaining and carefully studying) all such examinations, investigations, explorations, tests, reports and studies in addition to or to supplement physical conditions at or contiguous to the site or otherwise may affect the cost, progress, performance or furnishing of the Work as CONTRACTOR considers necessary for the performance or furnishing of the Work at the Contract Price, within the Contract Time and in accordance with other terms and conditions of the Contract Documents, including specifically the provisions of EXHIBIT "B" GENERAL CONDITIONS; and no additional examinations, investigations, explorations, tests, reports, studies or similar information or data are or will be required by CONTRACTOR for such purposes.

8.4 CONTRACTOR has reviewed and checked all information and data shown or indicated on the Contract Documents with respect to existing Underground Facilities at or contiguous to the site and assumes responsibility for the accurate location of said Underground Facilities. No additional examinations, investigations, explorations, tests, reports, studies or similar information or data in respect of said

Underground Facilities are or will be required by CONTRACTOR in order to perform and furnish the Work at the Contract Price, within the Contract Time and in accordance with the other terms and conditions of the Contract Documents.

8.5 CONTRACTOR has correlated the results of all such observations, examinations, investigations, explorations, tests, reports, and studies with the terms and conditions of the Contract Documents.

8.6 CONTRACTOR has given ENGINEER written notice of all conflicts, errors or discrepancies that he has discovered in the Contract Documents and the written resolution thereof by ENGINEER is acceptable to CONTRACTOR.

8.7 By entering into this Contract, the CONTRACTOR becomes obligated to comply with the provisions of Section 448.095, Fla. Stat., "Employment Eligibility." This includes but is not limited to the utilization of the E-Verify System to verify the work authorization status of all newly hired employees, and requiring all subcontractors to provide an affidavit attesting that the subcontractor does not employ, contract with, or subcontract with an unauthorized alien. Failure to comply will lead to termination of this Contract, or if a subcontractor knowingly violates the statute, the subcontract must be terminated immediately. Any challenge to termination under this provision must be filed in the Circuit Court no later than twenty (20) calendar days after the date of termination. If this contract is terminated for a violation of the statute by the CONTRACTOR, the CONTRACTOR may not be awarded a public contract for a period of one (1) year after the date of termination.

Article 9. CONTRACT DOCUMENTS

The Contract Documents, which comprise the entire agreement between OWNER and CONTRACTOR concerning the Work, consist of this Agreement and the following Exhibits, attached hereto and by reference incorporated herein and made a part hereof:

Exhibit "A" – Request for Proposal (RFP)25-040, including, but not limited to, original RFP25-040, general conditions, specifications, drawings, exhibits to the RFP25-040, insurance requirements, any addenda issued and all documentation submitted by the CONTRACTOR; including, but not limited to, CONTRACTOR's Bid Pages, CONTRACTOR's sworn statement on drug-free workplace, CONTRACTOR's insurance certificate, any documentation submitted by the CONTRACTOR prior and after award in relation to the RFP25-040 and this Agreement

Exhibit "B" –GENERAL CONDITIONS

Exhibit "C" – Supplementary Conditions

This Agreement and the exhibits listed above, including any approved amendments to the Agreement, comprise the entirety of the Contract documents between the OWNER and CONTRACTOR. This Agreement may only be amended, modified, or supplemented as provided in Exhibit "B," General Conditions.

Any inconsistency in this Agreement and its exhibits listed above shall be resolved by giving precedence in the following order:

a) This Agreement
b) Exhibit "A" RFP25-040, addenda, and documentation
c) Exhibit "B", General Conditions
d) Exhibit "C", Supplementary Conditions

Article 10. MISCELLANEOUS

10.1 Terms used in this Agreement that are defined in EXHIBIT "B" GENERAL CONDITIONS will have the meanings indicated in EXHIBIT "B" GENERAL CONDITIONS.

10.2 No assignment by a party hereto of any rights under or interests in the Contract Documents will be binding on another party hereto without the written consent of the party sought to be bound; and specifically but without limitation moneys that may become due and moneys that are due may not be assigned without such consent (except to the extent that the effect of this restriction may be limited by law), and unless specifically stated to the contrary in any written consent to an assignment no assignment will release or discharge the assignor from any duty or responsibility under the Contract Documents.

10.3 OWNER and CONTRACTOR each binds itself, its partners, successors, assigns, and legal representatives to the other party hereto, its partners, successors, assigns, and legal representatives with respect to all covenants, agreements, and obligations contained in the Contract Documents.

10.4 Project Web Requirements:

a. This project shall utilize e-Builder Enterprise (Software), a web-based project management software. OWNER shall use the Software to manage all project documents, communications and costs between the CONTRACTOR and OWNER. Training will be provided for the CONTRACTOR and all subcontractors requiring software access.

b. CONTRACTOR shall conduct project controls outlined by the OWNER utilizing the Software. **The designated web-based application license(s) shall be provided by the OWNER to the CONTRACTOR and subcontractors**. No additional software will be required.

c. CONTRACTOR shall have the responsibility for logging in to the project web site on a daily basis, and as necessary, to be kept fully apprised of project developments and required action items. These may include but are not limited to: Contracts, Contract Exhibits, Contract Amendments, Drawing Issuances, Addenda, Bulletins, Permits, Insurance & Bonds, Safety Program Procedures, Safety Notices, Accident Reports, Personnel Injury Reports, Schedules, Site Logistics, Progress Reports, Correspondence, Daily Logs, Non-Conformance

Notices, Quality Control Notices, Punch Lists, Meeting Minutes, Requests for Information, Submittal Packages, Substitution Requests, Monthly Payment Request Applications, Supplemental Instructions, Owner Change Directives, Potential Change Orders, Change Order Requests, Change Orders and the like. All supporting data, including but not limited to shop drawings, product data sheets, manufacturer data sheets and instructions, method statements, safety SDS sheets, Substitution Requests, and the like, will be submitted in digital format via the Software.

THE REMAINDER OF THIS PAGE IS INTENTIONALLY LEFT BLANK

IN WITNESS WHEREOF, the parties hereto have caused this Agreement to be executed the day and year hereinabove written.

Attest:

CITY OF POMPANO BEACH

_____
KERVIN ALFRED, CITY CLERK

By:_____
REX HARDIN, MAYOR

APPROVED AS TO FORM:

By:_____
GREGORY P. HARRISON, CITY MANAGER

_____
MARK E. BERMAN, CITY ATTORNEY

(SEAL)

"CONTRACTOR"

Witnesses:

Alejandra Villatoro
(Print or Type Name)

(Print or Type Name)

DBF Construction LLC.

By: _____
Mark Giannetti, President

STATE OF FLORIDA

COUNTY OF Broward

The foregoing instrument was acknowledged before me, by means of ☒ physical presence or ☐ online notarization this 14th day of August, 2025, by AUTHORIZED SIGNER as **Mark Giannetti, President, DBF Construction LLC**, a Florida limited liability company OR a foreign corporation authorized to do business in Florida. He is personally known to me or who has produced _____(type of identification) as identification.

NOTARY'S SEAL:

STEPHANY CAMPO
MY COMMISSION # HH 412844
EXPIRES: October 20, 2027

NOTARY PUBLIC, STATE OF FLORIDA

Stephany Campo
(Name of Acknowledger Typed, Printed or Stamped)

HH412844
Commission Number

EXHIBIT “A”

Florida's Warmest Welcome

REQUEST FOR PROPOSALS (RFP)

RFP25-040

Non-Sewer Area C Sanitary Sewer Improvements

Pre-Proposal Meeting:
April 30, 2025, at 10:00 A.M.
Virtual Zoom Meeting
For access, go to:
https://www.pompanobeachfl.gov/meetings

RFP OPENING: May 22, 2025, at 2:00 PM
Virtual Zoom Meeting
For access, go to:
https://www.pompanobeachfl.gov/meetings

April 22, 2025

Dear Prospective Proposers,

SUBJECT: REQUEST FOR PROPOSALS (RFP) RFP25-040 - Non-Sewer Area C Sanitary Sewer Improvements

The City of Pompano Beach (the "City") is interested in receiving proposals in response to the attached RFP for Non-Sewer Area C Sanitary Sewer Improvements.

Proposers must be registered on the City's eBid System to view the solicitation documents and respond to this solicitation. The complete solicitation document can be downloaded for free from the eBid System at https://pompanobeachfl.ionwave.net/. Proposals must bear the electronic signature of an authorized officer of the Proposer who is legally authorized to enter into a contractual relationship in the Proposer's name. THE CITY will consider the submittal of a proposal as constituting an offer by the Proposer to perform the required services at the prices stated herein. The City is not responsible for the accuracy or completeness of any documentation the Proposer receives from any source other than the eBid System. The proposer is solely responsible for downloading all required documents. Responses will be electronically unsealed in a public forum and read aloud.

Proposals must be submitted electronically at (https://pompanobeachfl.ionwave.net), referred to hereinafter as the eBid System, on or before the date and time stated in **Section 2 —Schedule of Events. Proposals received after 2:00:00 p.m. ET on the due date will not be considered, and late bids will not be accepted**.

The Cone of Silence shall take effect once this solicitation is released to the General Public. Respondents to this solicitation or persons acting on their behalf may not contact, between the release of the solicitation and the end of the 72 hours following the agency posting the notice of intended award, excluding Saturdays, Sundays, and state holidays, any employee or officer of the executive or legislative branch concerning any aspect of this solicitation, except in writing to the procurement officer or as provided in the solicitation documents. Violation of this provision may be grounds for rejecting a response." (F.S 287.057 (25)).

Any proposer or lobbyist for a proposer is prohibited from having any communications concerning any solicitation for a competitive procurement with any member of the City Commission, City Clerk, City Manager's Office, any Evaluation Committee Member, or any other City of Pompano Beach employee after Procurement and Contracts releases a solicitation to the General Public. All communications must go through the Procurement and Contracts Department staff. No other member of the City Commission, City Clerk, City Manager's Office, any Evaluation Committee Member, or any other City of Pompano Beach employee should be contacted concerning this RFP. Any information that amends any portion of this RFP received by any method other than an Addendum issued to the RFP is not binding on the City of Pompano Beach.

Carefully read all portions of the RFP document to ensure the Proposer's bid fully complies with all requirements.

Table of Contents

1. DEFINITIONS 4
2. SCHEDULE OF EVENTS 5
3. INTRODUCTION AND GENERAL INFORMATION 6
4. SCOPE OF WORK 7
5. SUBMITTAL INSTRUCTIONS AND REQUIREMENTS 8
6. PROPOSAL REQUIREMENTS 9
7. EVALUATION AND AWARD 16
8. STANDARD PROVISIONS 19
9. ADDENDA 25
10. ATTACHMENTS AND EXHIBITS 25

1. DEFINITIONS

The following words, when used in this RFP, shall have the meanings ascribed to them, except where the context indicates a different meaning:

- ***"Bid"*** means an offer or Proposal submitted by a Proposer in response to any formal bid or solicitation. The terms ***Bid* and *Proposal*** may be used interchangeably throughout this RFP.
- ***"Contract"*** means any agreement resulting from this RFP. ***Contract*** and ***Agreement*** may be used interchangeably throughout this RFP.
- ***"Project"*** means work on all Non-Sewer Area C: Septic to Sewer Improvements, as described herein.
- "***Project Team***" means the Proposer, Other Team Members, and any subcontractors proposed by a Proposer in response to this solicitation.
- "***Proposer***" means the company/firm, corporation, joint venture, partnership, individual, or other legal entity submitting a Proposal to this RFP. The terms Proposer and Contractor may be used interchangeably throughout this RFP.
- "***Team Member(s)***" means each entity, as found in the organizational chart submitted within the Proposal, that will perform a lead role in the Project.
- "***Proposal***" means the complete response of the Proposer to the RFP, including properly completed forms and supporting documentation. The terms Proposal and Solicitation may be used interchangeably throughout this RFP. The insurance requirements described herein reflect the requirements deemed necessary for the agreement/contract by the City.

2. SCHEDULE OF EVENTS

RFP NUMBER:	**RFP25-040**
RFP TITLE:	**Non-Sewer Area C Sanitary Sewer Improvements**
RELEASE DATE:	**April 22, 2025**
DATE PUBLISHED IN SUN-SENTINEL	**April 21, 2025**
Pre-Proposal Meeting: VIRTUAL ZOOM MEETING	**April 30, 2025, at 10:00 AM**
WRITTEN QUESTIONS AND INQUIRIES ARE DUE ON OR BEFORE:	**May 12, 2025, at 5:00 PM**
RFP RESPONSES DUE DATE/TIME:	**May 22, 2025**
EVALUATION COMMITTEE MEETINGS	**TBD**
RECOMMENDATION FOR AWARD:	**TBD**
DIRECT ALL INQUIRIES TO:	**https://pompanobeachfl.ionwave.net**
E-PROPOSAL SUBMITTALS ONLY:	**https://pompanobeachfl.ionwave.net**
PROPOSAL VIRTUAL OPENING:	**https://www.pompanobeachfl.gov/meetings**

3. INTRODUCTION AND GENERAL INFORMATION

3.1. Project Background

The City of Pompano Beach has initiated the Area C Sanitary Sewer Improvement Project to establish a new sanitary sewer collection system for properties within Area C, which is not currently served by an existing sanitary sewer network. The project area, which encompasses approximately 52 acres, is generally bounded by NW 16th Street, Powerline Road, and NW 15th Avenue. It consists of multiple commercial and light industrial properties, many relying on septic systems and private lift stations.

3.2. Pre-Proposal Meeting

The Pre-Proposal Meeting will be held via Virtual Zoom Meeting on April 30, 2025, at 10:00 AM. (local). The Zoom link is available on the City's Meetings webpage: https://www.pompanobeachfl.gov/meetings.

3.3. Proposal Submittal Due Date

The City will receive sealed proposals by 2:00 p.m. (local) on **May 22, 2025**. Proposals must be submitted electronically through the eBid System on or before the due date/time stated above. Any proposal received after the due date will not be considered.

3.4. Questions and Communication

http://www.pompanobeachfl.ionwave.net is the official method of Procurement and Contracts Department has approved the distribution and communication of all competitive solicitations. All questions regarding this RFP must be submitted using the Questions feature in the eBid System on or before **May 12, 2025, at 5:00 PM** via http://www.pompanobeachfl.ionwave.net/. Questions received after this date and time will not be answered. Questions submitted by Proposers will be answered through the IonWave Questions feature or via Addenda, if necessary. Any verbal or written information obtained from other than the information included in this RFP document or by an Addenda shall not be binding on the City.

4. SCOPE OF SERVICES

The project's primary objective is to implement a reliable and efficient sewer infrastructure to enhance wastewater management and environmental sustainability. The proposed improvements are structured into two sewer basins:

- **Basin A**: Installation of new gravity sewer infrastructure along NW 16th Street and North Powerline Road, connecting to the existing Lift Station #104.

- **Basin B**: Installation of new gravity sewer infrastructure along NW 18th Street and NW 19th Avenue, leading into a newly constructed sanitary sewer lift station with a 6-inch force main discharging into the existing sanitary sewer service for Lift Station #101.

The project is expected to improve wastewater conveyance efficiency and support future urban development within the area. Refer to **Attachment A - Technical Specifications** and **Attachment B - Plans and Drawings** for a detailed scope of services.

5. SUBMITTAL INSTRUCTIONS AND REQUIREMENTS

5.1. Submission Format Requirements

Proposals must be submitted electronically through the eBid System (https://pompanobeachfl.ionwave.net) on or before the date and time stated in Section 1-Schedule of Events. Please follow all the steps and requirements to submit proposals at http://www.pompanobeachfl.ionwave.net/. Submissions must include all documents, requirements, and attachments advertised on the website within the Attributes tab and the Response Attachments tab of the eBid System.

The City will in no way be responsible for delays caused by technical or other issues. It is the sole responsibility of the Proposer to ensure its Proposal is successfully submitted in the eBid System before the established deadline for Proposal submission.

The City reserves the right to reject and not consider any proposals that are not submitted according to the requirements established herein.

5.2. Proposer's Responsibilities

Before submitting a response, the Proposer shall be solely responsible for making any investigations, evaluations, and examinations, as it deems necessary, to ascertain all conditions and requirements affecting the full performance of the Contract. Ignorance of such conditions and requirements, and/or failure to make such evaluations, investigations, and examinations, will not relieve the Proposer from any obligation to comply with every detail and with all provisions and requirements of the Contract and will not be accepted as a basis for any subsequent claim whatsoever for any monetary consideration on the part of the Proposer.

5.3. Costs Incurred by the Proposer in Preparation of the Proposal

Proposers are responsible for any and all costs associated with responding to this RFP. The City will not reimburse any Proposer for preparation, submittal, travel, or per diem costs. All expenses involved with the preparation and submission of Proposals, or any work performed in connection with this solicitation, shall be the sole responsibility (and shall be at the sole cost and expense) of the Proposer and shall not be reimbursed by the City.

5.4. Composition Of Project Team

The principals and personnel named in the proposal must perform the services throughout the contractual term unless otherwise provided for by way of a negotiated contract or written amendment to the same executed by both parties. No diversion or substitution of principals or personnel will be allowed unless a written request that sets forth the qualifications and experience of the proposed replacement(s) is submitted to and approved by the City in writing.

5.5. Environmental Regulations and OSHA Violations

The City reserves the right to consider the Proposer's history of citations or OSHA violations of Environmental Regulations and in investigating the Proposer's responsibility. Further, it reserves the right to declare the Proposer not responsible if the history of violations warrants such determination in the opinion of the City. The Proposer shall submit a complete history of all citations, violations, notices, and dispositions within the Proposal. The non-submission of any such documentation shall be deemed an affirmation by the Proposer that there are no citations or violations. The Proposer shall notify the City immediately of notice of any citation or violation, which Proposer may receive after the RFP opening date and during the time of performance of any contract/agreement awarded to it.

5.6. Summary Information

	RFP SUMMARY	
Projects as prime in Pompano Beach	Project name Type/Complexity	Const. Cost
1		
2		
3		
Projects as prime not in Pompano Beach	Project name/Location/Type/Complexity	Const. Cost
1		
2		
3		
Office Locations	Location	# Employees
1		
2		
Subconsultants (Top 3)	Name/Discipline/Location	Paid by prime past 12 months
1		
2		
3		
Bonding in use	Project Name/Current bond $	Expiration Date of bond
1		
2		
3		
Litigation past 5 years (Top 3)	Litigation Name	Risk value $
1		
2		

Construction Schedule	Start Date	Duration (Months)
1		
References	Name Company	Email
1		
2		

6. Proposal Requirements and Evaluation Criteria

This section represents the information that will be utilized to determine if the Proposals are complete and the assignment of points following the evaluation criteria in Section 7 for the proposal submitted. The maximum possible points awarded for each section are notated. Failure to respond or incomplete responses to any evaluation criteria below will result in zero or reduced allocation of points for the criteria and may disqualify the entire proposal. In addition, to maintain comparability and facilitate and expedite the review process, it is strongly recommended that the proposals be organized as specified below:

6.1. Proposer's Experience and Expertise (Maximum 25 Points)

6.1.1. Title page:

Show the project name and number, the name of the Proposer's firm, address, telephone number, name of the contact person, and the date.

6.1.2. Table of Contents:

Include a clear identification of the material by section and by page.

6.1.3. Letter of Interest:

Letter of Interest, signed by an authorized representative of the Proposer's firm, expresses the Proposer's commitment to provide the services described herein. In the letter, include:

- complete corporate name of the primary firm responding and any partners of a joint venture
- applicable Federal Tax Identification Number
- address
- telephone and fax numbers
- name, title, and email of the person to contact regarding your submission

6.1.4. Understanding of the Project:

Written understanding of the project needs and how the Proposer's team intends to apply this information to benefit the City and the community.

6.1.5. Organizational Chart and Principal/Key Team Members:

Identify the management plan and provide an organizational chart for the team. The proposer must describe, at minimum, the basic approach to these projects, including the reporting hierarchy of staff and sub-consultants. Clarify the individual(s) responsible for coordinating separate components of the scope of services that will be designated as principals and/or key team members for the Proposer. The Proposer must commit that the principals and personnel named in the response will perform the services throughout the Agreement term unless otherwise provided for by way of a negotiated Agreement/written amendment to the same executed by both parties. No diversion or substitution of principals or personnel will be allowed unless a written request that sets forth the qualifications and experience of the proposed replacement(s) is submitted to and approved by the City in writing.

6.1.6. Statement of Skills and Experience of Project Team:

Provide resumes for key project team members and their experience of similar projects within the last 5 years. Brief corporate background and explanation of qualifications for this particular type of project as related to key team members. Include the experience of the prime consultants as well as other members of the project team, i.e., additional personnel, sub-consultants, branch office, team members, and other resources anticipated to be utilized for this project. Name specific projects (successfully completed within the past 2 years) where the team members have performed projects with similar characteristics.

6.1.7. Copy of State of Florida General Contracting License:

Provide a copy of applicable license(s) for team members(s).

6.1.8. Unique Capabilities:

Identify any additional or unique resources, options, capabilities, or assets the Proposer would bring to this

project.

6.1.9. Environmental Compliance:
Submit a complete history of all environmental citations, violations, notices, and dispositions. The non-submission of any such documentation shall be deemed to be an affirmation by the Proposer that there are no citations or violations.

6.1.10. Bonding Capacity:
Each bid requires a certified check or bid bond executed on the prescribed form, payable to the City of Pompano Beach, Florida, in an amount not less than 5 percent (5%) of the amount bid. Bidder shall upload a copy of their bid bond or a copy of the certified check to the Response Attachments tab in the eBid System. The awarded bidder will be required to submit the original executed bid bond or cashier's check prior to the execution of the contract and before the commencement of any work.

Performance and Payment bonds, written on the City's forms, shall be submitted with the executed contract by the Proposer receiving an award. They shall be written for 100% of the Contract award amount, the cost borne by the Proposer receiving an award.

6.1.11. Conflicts of Interest:
Provide the name(s) of any officer, director, agent, or immediate family member (spouse, parent, sibling, and child) who is also an employee, elected or appointed official of the City of Pompano Beach. Further, the Proposer must disclose the name of any City employee, elected or appointed official who owns, either directly or indirectly, an interest of ten (10%) percent or more in the Proposer entity or any of its affiliates.

6.1.12. Litigation:
Disclose any litigation within the past five (5) years of the firm's/team member's performance, including status/outcome. If there is no litigation, the Proposer must include a letter that no litigation exists within the past (5) years.

6.1.13. Office Locations:
Identify the office's location from which services will be rendered and the number of professional and administrative staff at the prime office. Also, identify the location of office(s) of the prime and the sub-consultants that may be utilized to support any or all of the professional services listed above and the number of professional and administrative staff at the prime office location. If firms are situated outside the local area (the City of Pompano Beach), include a brief statement as to whether or not the firm will arrange for a local office during the contract term, if necessary.

6.2. <u>Reference (Maximum 20 Points)</u>
Provide references (no more than five from past projects) of projects of similar scope, preferably of a similar size and scope. The successful team must include members with similar experience. Projects can include past and active projects. Describe the scope of each project in physical terms and by cost, describe the respondent's responsibilities, and provide the contact information (name, email, telephone number) of an individual in a position of responsibility who can attest to the respondent's activities concerning the project.

6.3. <u>Resources and Methodology: (Maximum 25 Points)</u>
Provide a narrative describing the overall approach and the breadth of quality resources assigned to the project. Consider scheduling, phasing, and public outreach in describing the overall approach.

6.4. <u>Cost (Maximum 25 Points)</u>
Proposers will provide a detailed cost proposal for the line items and unit quantities in Attachment C. The contract price shall include labor, materials, travel, equipment, and all items necessary to complete all Non-Sewer Area C: Septic to Sewer Improvements, as described herein.

6.5. <u>Other Required Documentation</u>
The following documents are required to determine whether the Proposal meets the minimum requirements. However, these documents will not be considered when scoring the proposal.

6.5.1. City Forms:

Responses should include all pages of this solicitation, initialed where indicated, and completed SBE and Local Business forms. These forms are included in this RFP and available as attachments to the eBid System. These forms must be completed electronically in the Attributes tab or uploaded to the Response Attachments tab of the eBid System.

6.5.2. Insurance

The insurance described herein reflects the requirements deemed necessary for this contract by the City. The contractor is responsible for delivering to the City for timely review and written approval/disapproval Certificates of Insurance, which evidence that all insurance required hereunder is in full force and effect and which name the city as an additional insured on a primary basis on all such coverage.

CONTRACTOR shall not commence services under the terms of this Agreement until certification or proof of insurance detailing terms and provisions have been received and approved in writing by the City's Risk Manager. If you are responding to a bid and have questions regarding the insurance requirements hereunder, please contact the City's Purchasing Department at (954) 786-4098. If the contract has already been awarded, please direct any queries and proof of the requisite insurance coverage to the City staff responsible for oversight of the subject project/contract.

CONTRACTOR is responsible for delivering to the CITY for timely review and written approval/disapproval Certificates of Insurance, which evidence that all insurance required hereunder is in full force and effect and which name on a primary basis, the CITY as an additional insured on all such coverage. Such policy or policies shall be issued by United States Treasury-approved companies authorized to do business in the State of Florida. The policies shall be written on forms acceptable to the City's Risk Manager, meet a minimum financial A.M. Best and Company rating of no less than Excellent, and be part of the Florida Insurance Guarantee Association Act. No changes are to be made to these specifications without prior written approval of the City's Risk Manager.

Throughout the term of the agreement/contract, the City, by and through its Risk Manager, reserves the right to review, modify, reject, or accept any insurance policies required by the agreement/contract, including limits, coverages, or endorsements. The City reserves the right, but not the obligation, to review and reject any insurer providing coverage because of poor financial condition or failure to operate legally.

Failure to maintain the required insurance shall be considered an event of default. The requirements herein, as well as the City's review or acceptance of insurance maintained by the Contractor, are not intended to and shall not in any way limit or qualify the liabilities and obligations assumed by the Contractor under the agreement/contract. Throughout the agreement/contract term, the Contractor and all subcontractors or other agents hereunder shall, at its sole expense, maintain in full force and effect the following insurance coverages and limits described herein, including endorsements.

A. Worker's Compensation Insurance covering all employees and providing benefits as required by Florida Statute, Chapter 440, regardless of the size of the company/firm (number of employees) or the state in which the work is to be performed or of the state in which Contractor is obligated to pay compensation to employees engaged in the performance of the work. No exemption will be considered. The contractor further agrees to be responsible for the employment, control, and conduct of its employees and any injury sustained by such employees during their employment.
B. Liability Insurance
    1. Naming the City of Pompano Beach as an additional insured as the City's interests may appear, on General Liability Insurance only, relative to claims arising from the Contractor's negligent acts or omissions in connection with the Contractor's performance under this agreement/contract.
    2. Such liability insurance shall include the following checked types of insurance and indicated minimum policy limits:

TYPE OF INSURANCE LIMITS OF LIABILITY

GENERAL LIABILITY:
Minimum $1,000,000 Per Occurrence and $2,000,000 Per Aggregate
* Policy to be written on a Claims incurred basis
XX comprehensive form bodily injury and property damage
XX premises - operations bodily injury and property damage
XX explosion & collapse
XX hazard
XX underground hazard
XX products/completed bodily injury and property damage combined
XX operations hazard
XX contractual insurance bodily injury and property damage combined
XX broad form property damage, bodily injury, and property damage combined
XX independent contractor's personal injury
XX personal injury
___ sexual abuse/molestation
___ liquor legal liability

AUTOMOBILE LIABILITY:
Minimum $1,000,000 Per Occurrence and $1,000,000 Per aggregate
XX comprehensive form
XX owned
XX hired
XX non-owned

Please note that Florida Statue Section 255.05 requires contractors who enter into a contract with the City to purchase a payment and performance bond when the contract is in excess of $200,000.

REAL & PERSONAL PROPERTY:
___ Comprehensive form
Agent must show proof they have this coverage.

EXCESS LIABILITY:

Minimum $5,000,000 Per Occurrence and $5,000,000 Per Aggregate
XX other than umbrella bodily injury and property damage combined

---

ENVIRONMENTAL / POLLUTION LIABILITY: Minimum $1,000,000 Per Occurrence and $1,000,000 Per Aggregate
* Policy to be written on a Claims incurred basis
XX environmental/pollution liability

PROFESSIONAL LIABILITY:
Minimum $1,000,000 Per Occurrence and $1,000,000 Per Aggregate
* Policy to be written on a Claims incurred basis
XX professional liability

CYBER LIABILITY:
Minimum $1,000,000 Per Occurrence and $1,000,000 Per Aggregate
* Policy to be written on a Claims incurred basis
___ Network Security / Privacy Liability
___ Breach Response / Notification Sublimit (minimum limit of 50% of policy aggregate)
___ Technology Products E&O - $1,000,000 (only applicable for vendors supplying technology-related services and or products)
___ Coverage shall be maintained in effect during the period of the Agreement and for not less than four (4) years after termination/ completion of the Agreement.

CRIME LIABILITY:

Minimum $1,000,000 Per Occurrence and $1,000,000 Per Aggregate
* Policy to be written on a Claims incurred basis

---

3. If Professional Liability insurance is required, the Contractor agrees the indemnification and hold harmless provisions of the agreement/contract shall survive the termination or expiration of the agreement/contract for a period of three (3) years unless terminated sooner by the applicable statute of limitations.

C. **Employer's Liability:** The contractor and all subcontractors shall, for the benefit of its employees, provide, carry, maintain, and pay for the Employer's Liability Insurance in the minimum amount of One Hundred Thousand Dollars ($100,000.00) per employee and Five Hundred Thousand Dollars ($500,000) per aggregate.

D. **Policies**: Whenever, under the provisions of the agreement/contract, insurance is required of the Contractor, the Contractor shall promptly provide the following:
   i. Certificates of Insurance evidencing the required coverage;
   ii. Names and addresses of companies providing coverage
   iii. Effective and expiration dates of policies; and
   iv. A provision in all policies affording City thirty (30) days written notice by a Carrier of any cancellation or material change in any policy.

E. **Insurance Cancellation or Modification**: Should any required insurance policies be canceled before the expiration date or modified or substantially modified, the issuing company/firm shall provide thirty (30) days written notice to the City.

F. **Waiver of Subrogation:** The contractor hereby waives any and all rights of subrogation against the City, its officers, employees, and agents for each required policy. When required by the insurer, or should a policy condition not permit an insured to enter into a pre-loss agreement/contract to waive subrogation without an endorsement, then the contractor shall notify the insurer and request the policy be endorsed with a Waiver of Transfer of Rights of Recovery Against Others or its equivalent. This Waiver of Subrogation requirement shall not apply to any policy that includes a condition to the policy not specifically prohibiting such an endorsement or voids coverage should the Contractor enter into such agreement/contract on a pre-loss basis.

G. The Contractor shall furnish to the City the certification or proof of insurance required by the provisions set forth above within ten (10) days after notification of the award of the agreement/contract. Certificate(s) to be issued to City of Pompano Beach, Attention Risk Manager, 100 West Atlantic Boulevard, Pompano Beach, Florida, 33060.

H. Builder Risk insurance is required.

7. EVALUATION AND AWARD

7.1. Minimum Eligibility Requirements

All proposals received must meet the minimum eligibility requirements as required in Section 6 and be confirmed at the time of submission to be considered for further evaluation. Failure to meet the Minimum Eligibility Requirements shall disqualify the entire proposal and prevent it from being considered for further evaluation.

The City reserves the right to seek any information or documentation from the Proposer or other source(s) as the City determines is necessary. Failure to submit any additional information in accordance with the City's request shall result in a Proposal being deemed non-responsive.

7.2. Evaluation Committee

The City Manager will approve a selection evaluation committee to assist in evaluating the Proposal(s) received and to select the most qualified Design-Build company or firm. All Proposals will be evaluated by the Evaluation Committee and Procurement and Contracts staff based on the information submitted by the Submitting Firm(s) in response to this RFP. The Committee's findings will be presented to the City Commission. Based upon the evaluation, the Evaluation Committee will recommend one Submitting Firm to the City Commissioners for the award and execution of a Design/Build Services Agreement.

7.3. Evaluation Process

Procurement and Contracts Department staff will initiate the review of the Proposals to determine the responsible and qualified Proposals that meet the Minimum Eligibility Requirements. All responsible and qualified Proposals will be provided to the Evaluation Committee. The Evaluation Committee will score the proposals based on the following:

SECTION NUMBER AND DESCRIPTION		POINTS
6.1	Experience and Expertise	25
6.2	References	20
6.3	Resources and Methodology	25
6.4	Cost	30

The Committee reserves the right to shortlist the proposals received or to request oral presentations from the proposers. If the Committee requests presentations, they will be scheduled in the future. The Proposers will each provide up to a 20-minute presentation to the Evaluation Committee members, followed by a question-and-answer period.

The Evaluation Committee shall rank the Proposers based on the criteria stated within this solicitation, the information provided in the proposal, and the presentation. After all members of the Evaluation Committee provide their scores for all Proposals, the scores will be calculated and combined, and the sum of qualitative scores will be converted to rankings. The highest-ranked Proposer(s) will enter into negotiations for the final terms of the contract. If contract negotiations cannot be completed with the highest-ranked team, then negotiations may proceed to other ranked teams in accordance with FSS 287.055.

7.4. Tie Breaker:

In case where there is a tie for the highest-ranked proposers, the recommendations shall be made by giving preference to the following items in this order:

1) Maintenance of a Drug-Free Workplace in accordance with the requirements of 287.087, F.S.
2) Local Business Program Participation
3) Closest Proximity/Location to the Project site
4) Coin Toss

7.5. Technicalities:

Failure to respond, provide detailed information, or provide requested proposal elements may reduce points in the evaluation process. The Committee may recommend rejecting any proposal containing material deviations from the RFP. The Committee may recommend waiving any irregularities and technicalities. If only one (1) responsive proposal is received, the Committee will proceed without scoring the one (1) responsive proposal and may recommend for Procurement and Contracts Department staff to negotiate the best terms and conditions with that sole Proposer or may recommend rejecting the proposal**.**

7.6. Committee Questions:

The Committee reserves the right to ask questions of a clarifying nature once proposals have been opened, require presentations from all Proposers, interview any or all Proposers that respond to the RFP, or make their recommendations based solely on the information contained in the proposals submitted. The Committee has the option to use the above criteria for the initial ranking to short-list Proposers and to use an ordinal ranking system to score short-listed Proposers following presentations (if deemed necessary) with a score of "1" assigned to the short-listed Proposer deemed most qualified by the Committee.

Each company/firm should submit documentation that evidences the company's/firm's capability to provide the services required for the Committee's review for shortlisting purposes. After an initial review of the proposals, the City may invite proposals for an interview to discuss the proposal and meet the company's/firm's representatives, particularly key personnel assigned to the project. Should interviews be deemed necessary, it is understood that the City shall incur no costs as a result of this interview nor bear any obligation in further consideration of the submittal.

7.7. Committee's Recommendations:

The Evaluation Committee may recommend rejecting any proposals or awarding the Non-Sewer Area C Sanitary Sewer Improvements

A complete recording shall be made of each meeting (evaluation and negotiation session) conducted by the Committee by the Purchasing Agent. The Committee may choose to conduct negotiation session(s) with as many ranked responsive and responsible proposers, in its sole judgment, as they deem appropriate before making its recommendation for award, starting with the highest-ranked proposer first, then the second highest-ranked proposer and so on. The Committee also has the discretion to recommend negotiations with only a single responsive and responsible proposer if the Committee chooses to do so. During any such negotiations, the City staff assigned to negotiate reserves the right to negotiate any term, condition, specification, or price during an exempt negotiation session with the highest-ranked responsive and responsible Proposer.

Per Section 286.0113(2), Florida Statutes, any negotiation session will be conducted to exclude the other ranked responsive and responsible Proposers and the public. The Committee will recess the open public portion of the evaluation meeting and conduct the exempt negotiation session of the competitive selection process, beginning with the highest-ranked responsive and responsible Proposer first, then the second highest-ranked Proposer, and so on until finished. The Committee also has the discretion to commence negotiations with only a single responsive and responsible proposer if it chooses to do so. Each ranked responsive and responsible Proposer must be represented during its exempt negotiations session by an authorized representative possessing the authority to bind the Proposer to the changes made during the negotiation session and be prepared to provide the Proposer's best and final offer. Any information communicated between the Committee and a ranked responsive and responsible Proposer during an exempt negotiation session shall not be disclosed to anyone during the open portion of the meeting, including other ranked responsive and responsible proposers, until disclosure is permitted under Section 286.0113(2), Florida Statutes.

After the exempt negotiation session(s) is/are completed, the Committee shall reconvene the open public portion of the evaluation meeting and determine, by motion and a roll call vote, whether to recommend an award to one (1) or more ranked responsive and responsible Proposers; to declare an impasse with a ranked responsive and responsible Proposer; or to proceed with further negotiations with one (1) or more of the next

highest-ranked responsive and responsible Proposers. The Committee may declare an impasse with a ranked responsive and responsible Proposer at any time or proceed with further negotiations with one (1) or more of the next highest-ranked Proposer(s). If negotiations are unsuccessful or have reached an impasse with a ranked Proposer, the Committee reserves the right not to recommend an award to a ranked Proposer if it is in the best interest of the City and must be stated on the record. The final scores are only a ranking of proposals for negotiation (i.e., the highest-ranked proposer will be the first to start the negotiations) and do not determine the actual award.

7.8. Negotiations:

Following the Evaluation Committee Meeting, the City reserves the right to enter into negotiations with the successful Proposer. Notwithstanding the preceding, the City is in no way obligated to enter into a Contract with any successful Proposer and may cease negotiations at any time. The Proposer also understands and acknowledges that no property, Contract, or legal rights of any kind shall be created at any time until and unless an Agreement has been agreed to, approved by the City, and executed by the parties. During the negotiation process, the City reserves the right to request the best and final offer from the Proposer with whom the City is negotiating.

7.9. Determination of Award:

The City Commission shall consider the Committee's award recommendation for this RFP and may approve such a recommendation. The City Commission may also, at its option, reject the Evaluation Committee's recommendation, or it may also reject all Proposals, in which case the City may choose to re-advertise this project "as is" or by adopting a modified version.

8. STANDARD PROVISIONS

8.1. RFP Conditions and Provisions

The proposal must be submitted to the City on or before the time and date stated herein. All Proposers, by submission of a proposal, shall agree to comply with all of the conditions, requirements, and instructions of this RFP as stated or implied herein. All proposals and supporting materials submitted will become the property of the City. Exceptions or deviations to this solicitation may not be added after the submittal date. All Proposers are required to provide all information requested in this RFP. Failure to do so may result in the proposal's disqualification.

The City reserves the right to postpone or cancel this RFP or reject all proposals if, in its sole discretion, it deems it in the City's best interest to do so. The City reserves the right to waive any technical or formal errors or omissions, reject all proposals, or award a contract for the items herein, in part or whole, if it is determined to be in the City's best interests.

The City shall not be liable for any costs incurred by the Proposer in preparing proposals or for any work performed therein.

8.2. Acceptance Period

Proposals submitted in response to this RFP must be valid for a period no less than one hundred eighty (180) days from the closing date of this solicitation.

8.3. Withdrawal Of Proposals

A firm may withdraw its proposal without prejudice no later than the advertised deadline for submission of proposals by using the eBid System or through written communication to the Procurement and Contracts Department, 1190 N.E. 3rd Avenue, Building C, Pompano Beach, Florida 33060.

8.4. Protest Procedures

The Protest Procedures established within the Procurement and Contracts Procedures Manual and Section 120.57, Florida Statutes must be followed to file a valid Protest to this solicitation. To be considered, protests concerning the proposed solicitation award must be filed in writing with the Procurement and Contracts Director. They may only be filed by bidders or proposers whom the solicitation or award may aggrieve. The initial protest must be addressed to the following:

Director of Procurement and Contracts, City of Pompano Beach
1190 N.E. 3rd Avenue, Building C, Pompano Beach, Florida 33060

8.5. Familiarity With Laws

It is assumed the selected firm(s) will be familiar with all federal, state, and local laws, ordinances, rules, standards, and regulations that may affect its services pursuant to this RFP. Ignorance on the part of the firm will in no way relieve the firm from responsibility for compliance.

8.6. Staff Assignment

The City of Pompano Beach reserves the right to approve or reject, for any reason, Proposer’s staff assigned to this project at any time. Background checks may be required at the discretion of the City.

8.7. Contract Terms

The contract shall include, at minimum, this RFP document and the successful Proposer’s proposal. The City of Pompano Beach City Attorney shall prepare the contract. If the City of Pompano Beach defends any claim, demand, cause of action, or lawsuit arising out of any act, action, negligent acts or negligent omissions, or

willful misconduct of the contractor, its employees, agents, or servants during the performance of the contract, whether directly or indirectly, the contractor agrees to reimburse the City of Pompano Beach for all expenses, attorney's fees, and court costs incurred in defending such claim, cause of action or lawsuit.

8.8. Waiver

It is agreed that no waiver or modification of the contract resulting from this RFP, or of any covenant, condition, or limitation contained in it shall be valid unless it is in writing and duly executed by the party to be charged with it, and that no evidence of any waiver or modification shall be offered or received in evidence in any proceeding, arbitration, or litigation between the parties arising out of or affecting this contract, or the right or obligations of any party under it, unless such waiver or modification is in writing, duly executed as above. The parties agree that the provisions of this paragraph may not be waived except by duly executed writing.

8.9. Manner of Performance

The proposer agrees to perform its duties and obligations under the contract resulting from this RFP in a professional manner and in accordance with all applicable local, federal, and state laws, rules, and regulations. Proposer agrees that the services provided under the contract resulting from this RFP shall be provided by employees who are educated, trained, experienced, certified, and licensed in all areas encompassed within their designated duties. Proposer agrees to furnish the City of Pompano Beach with all documentation, certification, authorization, license, permit, or registration currently required by applicable laws, rules, and regulations. Proposer further certifies that it and its employees are now in and will maintain good standing with such governmental agencies and that it and its employees will keep all licenses, permits, registrations, authorization, or certifications required by applicable laws or regulations in full force and effect during the term of this contract. Failure of Proposer to comply with this paragraph shall constitute a material breach of contract.

8.10. Quality

All materials and supplies used to construct the services within this RFP shall be new unless otherwise specified. The items must be new, of the latest model, quality, and the highest-grade workmanship. Reconditioned, refurbished, rebuilt, discontinued, used, shopworn, demonstrator, prototype, or other types of product(s) of this kind are unacceptable without written correspondence from the City with the City Manager's approval**.**

8.11. Omissions

Omissions in the specifications of the RFP, Attachments, Exhibits, or any Addendum regarding any details or the omission from the specification of a detailed description concerning any point shall be interpreted as meaning that only the best available units or service shall be provided. The best commercial practices are to prevail, and only materials and workmanship of first quality are to be used to submit this proposal.

8.12. Hold Harmless and Indemnification

Proposer covenants and agrees that it will indemnify and hold harmless the City and all of its officers, agents, and employees from any claim, loss, damage, cost, charge, or expense arising out of any act, action, neglect, or omission by the Proposer, whether direct or indirect, or whether to any person or property to which the City or said parties may be subject, except that neither the Proposer nor any of its subcontractors will be liable under this section for damages arising out of injury or damage to persons or property directly caused by or resulting from the sole negligence of the City or any of its officers, agents or employees.

8.13. Composition Of Project Team

The principals and personnel named in the proposal must perform the services throughout the contractual term unless otherwise provided for by way of a negotiated contract or written amendment to the same executed by both parties. No diversion or substitution of principals or personnel will be allowed unless a written request that sets forth the qualifications and experience of the proposed replacement(s) is submitted to and approved by

the City in writing.

8.14. Survivorship Rights

This contract resulting from this RFP shall be binding on and inure to the benefit of the respective parties and their executors, administrators, heirs, personal representatives, successors, and assigns.

8.15. Termination

The contract resulting from this RFP may be terminated by the City of Pompano Beach without cause upon providing the contractor with at least sixty (60) days prior written notice. Should either party fail to perform any of its obligations under the contract resulting from this RFP for a period of thirty (30) days after receipt of written notice of such failure, the non-defaulting part will have the right to terminate the contract immediately upon delivery of written notice to the defaulting part of its election to do so. The foregoing rights of termination are in addition to any other rights and remedies such party may have.

8.16. Governing Law

Any agreement resulting from this RFP shall be governed by the laws of the State of Florida, and the venue for any legal action relating to such agreement will be the 17th Judicial Circuit Court of Broward County, Florida.

8.17. Relationship to the City

It is the intent of the City, and the Proposer hereby acknowledges and agrees that the successful Proposer is considered to be an independent Contractor and that neither the Proposer nor the Proposer's employees, agents, or Contractors shall, under any circumstances, be considered employees or agents of the City.

8.18. Cone of Silence

The Cone of Silence shall take effect once this solicitation is released to the General Public. Respondents to this solicitation or persons acting on their behalf may not contact any aspect of this solicitation, except in writing, the Procurement and Contracts Department staff until the City Commission takes action by approving or rejecting the award. Violation of this provision may be grounds for rejecting a response." (F.S 287.057 (25)). Any proposer or lobbyist for a proposer is prohibited from having any communications concerning any solicitation for a competitive procurement with any member of the City Commission, City Clerk, City Manager's Office, any Evaluation Committee Member, or any other City of Pompano Beach employee after Procurement and Contracts releases a solicitation to the General Public. All communications must go through the Procurement and Contracts Department staff.

8.19. Communications

No negotiations, decisions, or actions shall be initiated or executed by the Proposers as a result of any discussions with any City employee. Only those communications in writing from the City may be considered duly authorized expressions on behalf of the City. In addition, only communications from Proposers that are signed and in writing will be recognized by the City as duly authorized expressions on behalf of Proposers.

8.20. Conflict Of Interest

To determine any possible conflict of interest, each Proposer must disclose if any City employee is also an owner, corporate officer, or an employee of the firm. If any City employee is an owner, corporate officer, or an employee, the Proposer must file a statement with the Broward County Supervisor of Elections pursuant to § 112.313, Florida Statutes.

8.21. Lobbying

No Lobbying Permitted: As to any matter relating to this solicitation, the Proposer, project team member, or anyone representing the Proposer is advised they are prohibited from contacting or lobbying the Mayor, any

City Commissioner, City employees, agents, or any other person working on behalf of the City related to or involved with this solicitation, including all members of the City and CRA advisory committees. For purposes of clarification, a team's representatives shall include, but not be limited to, the Proposer's employees, partners, attorneys, officers, directors, consultants, lobbyists, or any actual or potential subcontractor or consultant of the Proposer and the Proposer's team. All questions regarding the solicitation are to be submitted using the Questions feature in the eBid System. Any violation of this condition may result in rejection and disqualification of the response/Proposal. **This "No Lobbying Provision" is in effect from the date of publication of the solicitation and shall terminate when the City approves the execution of a Contract with an awarded Proposer, rejects all responses, or otherwise takes action, which ends the solicitation process.**

The Proposer shall disclose any commitment, direct or indirect, financial or otherwise made to any person, entity, institution, or association (Recipient), other than a team member identified as required by the solicitation submittal requirements, in connection with or potentially in connection with this solicitation. Because of the City's commitment to complete transparency regarding this solicitation, the Disclosure Form shall be required to be updated to include additional Recipients, if any, up to and including the date of approval by the City Commission of the final negotiated Agreement. Additionally, all such Recipients shall be required to register as lobbyists as required by Sec. 34.402 of the City's Code.

8.22. Right to Inspect or Audit

Contractor's records which shall include but not be limited to accounting records, written policies, procedures, computer records, disks and software, videos, photographs, subcontract files (including Proposals of Successful and Unsuccessful Proposers, originals, estimates, estimating worksheets, correspondence, change order files (including documentation covering negotiated settlements), and any other supporting evidence necessary to substantiate charges related to the agreement/contract (all the foregoing hereinafter referred to as "records") shall be open to inspection and subject to audit and reproduction, during normal working hours, by City's agent or its authorized representative to the extent necessary to adequately permit evaluation and verification of any invoices, payments or claims submitted by the Contractor or any of its payees pursuant to the execution of the agreement/contract. Such records subject to the examination shall also include but are not limited to, those necessary to evaluate and verify direct and indirect costs (including overhead allocations) as they may apply to costs associated with the agreement/contract.

For the purpose of such audits, inspections, examinations, and evaluations, the City's agent or authorized representative shall have access to said records from the effective date of the agreement/contract, for the duration of the Work, and until five (5) years after the date of final payment by the City to the Contractor pursuant to the agreement/contract. The City's agent or authorized representative shall have access to the Contractor's facilities, all necessary records, and adequate and appropriate workspace to conduct audits in compliance with this article. The City's agent or its authorized representative shall give auditees reasonable advance notice of intended audits.

The Contractor shall require all subcontractors, insurance agents, and material suppliers (payees) to comply with this article's provisions by inserting the requirements hereof in any written agreement/contract. Failure to obtain such written agreements/contracts that include such provisions shall be a reason to exclude some or all of the related payees' costs from amounts payable to the Contractor pursuant to the agreement/contract.

8.23. No Discrimination

There shall be no discrimination as to race, sex, color, age, religion, or national origin in the operations conducted under any contract with the City.

8.24. Drug-Free Workplace

The selected firm(s) must verify that they will operate a "Drug-Free Workplace" as outlined in Florida Statute 287.087.

8.25. Public Entity Crimes

A person or affiliate who has been placed on the convicted vendor list following a conviction for public entity crime may not submit a proposal on a contract to provide any goods or services to a public entity, may not submit a proposal on a contract with a public entity for the construction or repair of a public building or public work, may not submit proposals on leases of real property to a public entity, may not be awarded or perform work as a contractor, supplier, subcontractor, or consultant under a contract with any public entity, and may not transact business with any public entity in excess of the threshold amount provided in Florida Statute, Section 287.017, for CATEGORY TWO for a period of 36 months from the date of being placed on the convicted vendor list.

8.26. Patent Fees, Royalties, And Licenses

If the selected Proposer requires or desires to use any design, trademark, device, material, or process covered by letters of patent or copyright. In that case, the selected Proposer and his surety shall indemnify and hold harmless the City from any and all claims for infringement because of the use of any such patented design, device, trademark, copyright, material, or process in connection with the work agreed to be performed and shall indemnify the City from any cost, expense, royalty or damage which the City may be obligated to pay because of any infringement at any time during or after completion of the work.

8.27. Price Adjustments

Price adjustments shall be handled on a case-by-case basis. Before any price adjustments are made, the reason must be provided in writing and accepted by the Director of Procurement and Contracts.

8.28. Invoicing/Payment

All invoices should be sent to the City of Pompano Beach, Accounts Payable, P.O. Drawer 1300, Pompano Beach, Florida, 33061. In accordance with Florida Statutes, Chapter 26, payment will be made within 45 days after receipt of a proper invoice.

8.29. Taxes

The City of Pompano Beach, Florida, does not pay Federal Excise or State taxes on purchases of tangible personal property. The sales tax exemption number is available upon request. This exemption does not apply to purchases of tangible property made by contractors who use tangible personal property in the performance of contracts for the improvement of real property owned by the City of Pompano Beach.

8.30. Force Majeure

Neither party shall be obligated to perform any duty, requirement, or obligation under this RFP if the City has determined that such performance is prevented by fire, hurricane, earthquake, explosion, war, sabotage, accident, flood, acts of God, strikes, or other labor disputes, riot or civil commotions, epidemics, pandemics, government regulations, and the issuance or extension of existing government orders of the United States, the State of Florida, or local county and municipal governing bodies, or because of any other matter or condition beyond the control of either party and which cannot be overcome by reasonable diligence and without unusual expense (“Force Majeure”). In no event shall lack of funds on the part of either party be deemed Force Majeure.

8.31. Public Records

The City is a public agency subject to Section 119, Florida Statutes. The Contractor shall comply with Florida's Public Records Law, as amended. Specifically, the Contractor shall:

a. Keep and maintain public records required by the City in order to perform the service;
b. Upon request from the City’s custodian of public records, provide the City with a copy of requested

records or allow the records to be inspected or copied within a reasonable time at a cost that does not exceed the cost provided in Section 119, Florida Statutes or as otherwise provided by law;

c. Ensure that public records that are exempt or confidential and exempt from public records disclosure requirements are not disclosed except as authorized by law for the duration of the agreement/contract term and following completion of the agreement/contract if the Contractor does not transfer the records to the City; and
d. Upon completion of the agreement/contract, transfer, at no cost to the City, all public records in possession of the Contractor or keep and maintain public records required by the City to perform the service. If the Contractor transfers all public records to the City upon completion of the agreement/contract, the Contractor shall destroy any duplicate public records that are exempt or confidential and exempt from public records disclosure requirements. If the Contractor keeps and maintains public records upon completion of the agreement/contract, the Contractor shall meet all applicable requirements for retaining public records. All records stored electronically must be provided to the City upon request from the City's custodian of public records in a format compatible with the City's information technology systems.

Failure of the Contractor to provide the above-described public records to the City within a reasonable time may subject the Contractor to penalties under Section 119.10, Florida Statutes, as amended.

8.32. <u>Public Records Custodian:</u>

If the awarded proposer has questions regarding the application of Chapter 119, Florida Statutes, to the awarded proposer's duty to provide public records relating to the agreement/contract, contact the custodian of public records at:

CITY CLERK
100 W. Atlantic Blvd., Suite 253,
Pompano Beach, Florida 33060
(954) 786-4611
RecordsCustodian@copbfl.com

9. ADDENDA

The issuance of a written addendum or posting of an answer in response to a question submitted using the Questions feature in the eBid System are the only official methods whereby interpretation, clarification, or additional information can be given. If any addenda is issued to this RFP solicitation, the addendum will be issued via the eBid System. The Proposer must obtain all Addendum/Addenda posted for this RFP in the eBid System before submitting a response to this RFP.

ATTACHMENTS AND EXHIBITS

9.1. Appendix A - Attachments

Attachment A – Technical Specifications
Attachment B – Plans and Drawings
Attachment C – Line-Item Pricing
Attachment D - 06.1_SRF_Davis-Bacon Act WD#FL20241101
Attachment E - 06.2_SRF_Sign_Information

9.2. Appendix B - City Forms

Attachment D - Disclosure of Potential Conflict of Interest and Conflicting Employment or Contractual Relationship
Attachment E - References
Attachment F - Contractor Performance Report

Procurement and Contracts Department
Mary Rivero, Director
mary.rivero@copbfl.com

RFP #: RFP25-040

Tentative City Commission Meeting Date*: TBD

RFP Title: Non-Sewer Area C Sanitary Sewer Improvements

Notified: 987 # Downloaded: 30

of Responses Rec'd: 4 # of "No Bids": 3

For: Engineering Department (Department)

RFP Opening Date: 06/12/2025

POSTING OF RFP RECOMMENDATION/TABULATION: RFP Recommendations and Tabulations will be posted in the eBid System IonWave and will remain posted for 72 hours. Any person who may be adversely affected by the decision or intended decision shall file a notice of protest in writing within 72 hours of posting the notice of the decision or intended decision. The formal written protest shall be filed within ten (10) days after the date the notice of protest is filed. Failure to file a notice of protest or a formal written protest shall constitute a waiver of proceedings under this chapter. Section 120.57(3)(b), Florida Statutes, states that "The formal written protest shall state with particularity the facts and law upon which the protest is based." Saturdays, Sundays, state holidays, and days when the City is closed shall be excluded from the computation of the 72-hour time period provided. Filings shall be at the office of the Director of Procurement and Contracts, 1010 NE 3rd Avenue, Pompano Beach, FL 33060. Any person who files an action protesting an intended decision shall post with the City, at the time of filing the formal written protest, a protest bond, payable to the City of Pompano Beach, Florida, in an amount equal to one percent (1%) of the estimated value of the contract. Failure to submit the protest bond within the time allowed for filing a bond shall constitute a waiver of the right to protest. Failure to file a protest within the time prescribed in Section 120.57(3), Florida Statutes, or failure to post the protest bond or other security required by law within the time allowed for filing a bond shall constitute a waiver of proceedings under Chapter 120, Florida Statutes.

(*) The Cone of Silence, as stated in the RFP, is in effect until the City Commission approves it. The City Commission meeting date stated above is tentative. Confirm with the Purchasing Agent of record for the actual date the Cone of Silence has concluded.

RECOMMENDATION TABULATION

The City of Pompano Beach, Florida, received four (4) proposals for RFP25-040 Non-Sewer Area C Sanitary Sewer Improvements, with the following results:

Proposal	Score	Ranking
DBF Construction LLC	95.25	Highest Ranked
Southern Underground Industries	86.75	2nd Highest Ranked
David Mancini & Sons, Inc.	82.75	3rd Highest Ranked
Man-Con Incorporated	80.25	4th Highest Ranked

Under Section 7 of the RFP, "the Evaluation Committee will recommend one Submitting Firm to the City Commissioners for the award and execution of a Design/Build Services Agreement". All four proposers met all the criteria outlined in the bidding documents and were deemed responsive and responsible.

The review of all proposals received confirmed that the four proposals meet all the requirements outlined in the RFP. DBF Construction LLC is the highest-ranked proposer; therefore, it is recommended for an award.

By: *Jeffrey English* (Purchasing Agent) Date: 07/07/2025

RFP25-040 Addendum 5
DBF CONSTRUCTION LLC
Supplier Response

Event Information

Number: RFP25-040 Addendum 5
Title: Non-Sewer Area C Sanitary Sewer Improvements
Type: Request for Proposals
Issue Date: 4/22/2025
Deadline: 6/12/2025 02:30 PM (ET)
Notes: The City of Pompano Beach (the "City") is interested in receiving proposals in response to the attached RFP for Non-Sewer Area C Sanitary Sewer Improvements.
Proposers must be registered on the City's eBid System to view the solicitation documents and respond to this solicitation. The complete solicitation document can be downloaded for free from the eBid System at https://pompanobeachfl.ionwave.net/. Proposals must bear the electronic signature of an authorized officer of the Proposer who is legally authorized to enter into a contractual relationship in the Proposer's name. THE CITY will consider the submittal of a proposal as constituting an offer by the Proposer to perform the required services at the prices stated herein. The City is not responsible for the accuracy or completeness of any documentation the Proposer receives from any source other than the eBid System. The proposer is solely responsible for downloading all required documents.
Responses will be electronically unsealed in a public forum and read aloud

Contact Information

Contact: Jeff English Purchasing Agent
Address: Procurement and Contracts
1190 NE 3 Avenue
Building C
Pompano Beach, FL 33060
Phone: (954) 786-4098
Fax: (954) 786-4168
Email: jeffrey.english@copbfl.com

DBF CONSTRUCTION LLC Information

Address: 240 SW 12th Ave
Suite 2
POMPANO BEACH, FL 33069
Phone: (954) 532-1918
Email: Alejandra@dbf-construction.com

By submitting this Response I affirm I have received, read and agree to the all terms and conditions as set forth herein. I hereby recognize and agree that upon execution by an authorized officer of the City of Pompano Beach, this Response, together with all documents prepared by or on behalf of the City of Pompano Beach for this solicitation, and the resulting Contract shall become a binding agreement between the parties for the products and services to be provided in accordance with the terms and conditions set forth herein. I further affirm that all information and documentation contained within this response to be true and correct, and that I have the legal authority to submit this response on behalf of the named Supplier (Offeror).

Mark Giannetti
Signature

Alejandra@dbf-construction.com
Email

Submitted at 6/12/2025 08:59:24 AM (ET)

Requested Attachments

Proposal

Proposal.pdf

Electronic version of proposal must be uploaded to the Response Attachments tab. The file size for uploads is limited to 250 MB. If the file size exceeds 250 MB the response must be split and uploaded as two (2) separate files.

Response Attachments

COI ILLUSTRATION OF COVERAGE.pdf

COI Illustration of Coverage

Pompano Beach Tax Receipt 2025.pdf

Pompano Beach Receipts

Broward County Tax Receipt 2025.pdf

Broward Tax Receipt

Bid Attributes

1	**Terms & Conditions** Check the box indicating you agree to the terms and conditions of this solicitation. ☑ Agree
2	**Acknowledgement of Addenda** Check this box to acknowledge that you have reviewed all addenda issued for this solicitation. ☑ Yes
3	**Substantial Project Completion** Provide the number of calendar days that the construction of the Project will be substantially complete after the date when the Contract Time commences to run as provided in the general conditions. 320

4	**Final Project Completion** Provide the number of calendar days, after the substantial completion date, that the construction of the Project will be completed and ready for final payment. 40
5	**Total Project Completion** Enter the sum of calendar days for the substantial and final project completion. 360
6	**Vendor Certification Regarding Scrutinized Companies Lists (Any Dollar Amount)** Section 215.4725, Florida Statutes, prohibits agencies from contracting (at any dollar amount) with companies on the Scrutinized Companies that Boycott Israel List, or with companies that are engaged in a boycott of Israel. As the person authorized to electronically sign on behalf of Respondent, I hereby certify by selecting the box below that the company responding to this solicitation is not listed on the Scrutinized Companies that Boycott Israel List. I also certify that the company responding to this solicitation is not participating in a boycott of Israel, and is not engaged in business operations in Syria or Cuba. I understand that pursuant to sections 287.135 and 215.4725, Florida Statutes, the submission of a false certification may subject company to civil penalties, attorney's fees, and/or costs. ☑ Certified
7	**Conflict of Interest** For purposes of determining any possible conflict of interest, all bidders must disclose if any City of Pompano Beach employee is also an owner, corporate officer, or employee of their business. Indicate either "Yes" (a City employee is also associated with your business), or "No". (Note: If answer is "Yes", you must file a statement with the Supervisor of Elections, pursuant to Florida Statutes 112.313.)Indicate yes or no below with the drop down menu. No

8	**Drug-Free Workplace**

STATEMENT UNDER SECTION 287.087, FLORIDA STATUTES ON DRUG-FREE WORKPLACE

REQUESTED INFORMATION BELOW IS ON THE ATTRIBUTES TAB FOR THE RFP IN THE EBID SYSTEM. PROVIDE THIS INFORMATION ELECTRONICALLY.

Preference must be given to Contractors submitting certification with their bid or proposal, certifying they have a drug-free workplace in accordance with Section 287.087, Florida Statutes. This requirement affects all public entities of the State and becomes effective January 1, 1991.

Preference shall be given to businesses with drug-free workplace programs. Whenever two or more bids which are equal with respect to price, quality and service are received by the State or by any political subdivision for the procurement of commodities or contractual services, a bid received from a business that certifies that it has implemented a drug-free workplace program shall be given preference in the award process. Established procedures for processing tie bids will be followed if none of the tied vendors have a drug-free workplace program. In order to have a drug-free workplace program, a business shall:

(1) Publish a statement notifying employees that the unlawful manufacture, distribution, dispensing, possession, or use of a controlled substance is prohibited in the workplace and specifying the actions that will be taken against employees for violations of such prohibition.

(2) Inform employees about the dangers of drug abuse in the workplace, the business's policy of maintaining a drug-free workplace, any available drug counseling, rehabilitation and employee assistance programs, and the penalties that may be imposed upon employees for drug abuse violations.

(3) Give each employee engaged in providing the commodities or contractual services that are under bid, a copy of the statement specified in subsection (1).

(4) In the statement specified in subsection (1) notify the employees that as a condition of working on the commodities or contractual services that are under bid, the employee will abide by the terms of the statement and will notify the employer of any conviction of, or plea of guilty or nolo contendere to, any violation of Chapter 893 or of any controlled substance law of the United States or any state, for a violation occurring in the workplace, no later than five (5) days after such conviction.

(5) Impose a sanction on, or require the satisfactory participation in, a drug abuse assistance or rehabilitation program if such is available in the employee's community, by an employee who is so convicted.

(6) Make a good faith effort to continue to maintain a drug-free workplace through implementation of this section.

As the person authorized to sign this statement, I certify that his company/firm complies with the above requirements.

By choosing YES, I hereby certify that the company/firm complies with all the above requirements

Yes

Bid Lines

1	Bonds & Insurance

Quantity: 1 UOM: LS Unit Cost: $350,000.00 Total: $350,000.00

Item Notes: GENERAL

2	Mobilization

Quantity: 1 UOM: LS Unit Cost: $300,000.00 Total: $300,000.00

Item Notes: GENERAL

3	Maintenance of Traffic

Quantity: 1 UOM: LS Unit Cost: $300,000.00 Total: $300,000.00

Item Notes: GENERAL

4	Consideration for Indemnification

Quantity: 1 UOM: LS Unit Cost: $10.00 Total: $10.00

Item Notes: GENERAL

5	Permit Fees and Required Testing					
	Quantity: 1	UOM: AL	Unit Cost:	$100,000.00	Total:	$100,000.00
	Item Notes: GENERAL					
6	FPL Allowance					
	Quantity: 1	UOM: AL	Unit Cost:	$20,000.00	Total:	$20,000.00
	Item Notes: GENERAL					
7	Construction Contingency					
	Quantity: 1	UOM: AL	Unit Cost:	$165,000.00	Total:	$165,000.00
	Item Notes: GENERAL					
8	Clear and Grade Grass Areas					
	Quantity: 155	UOM: SY	Unit Cost:	$12.32	Total:	$1,909.60
	Item Notes: DEMOLITION					
9	Remove and Dispose of Existing Asphalt Pavement					
	Quantity: 4445	UOM: SY	Unit Cost:	$10.08	Total:	$44,805.60
	Item Notes: DEMOLITION					
10	Remove and Dispose of Existing Limerock Base					
	Quantity: 4445	UOM: SY	Unit Cost:	$8.40	Total:	$37,338.00
	Item Notes: DEMOLITION					
11	Mill Existing Asphalt Pavement (3/4-inch)					
	Quantity: 5600	UOM: SY	Unit Cost:	$9.52	Total:	$53,312.00
	Item Notes: DEMOLITION					
12	Mill Existing Asphalt Pavement (2-inch) (FDOT R/W)					
	Quantity: 505	UOM: SY	Unit Cost:	$36.40	Total:	$18,382.00
	Item Notes: DEMOLITION					
13	Remove and Dispose Existing Sanitary Sewer Pipe					
	Quantity: 225	UOM: LF	Unit Cost:	$28.00	Total:	$6,300.00
	Item Notes: DEMOLITION					
14	Remove and Dispose Existing Sanitary Lateral					
	Quantity: 70	UOM: LF	Unit Cost:	$56.00	Total:	$3,920.00
	Item Notes: DEMOLITION					
15	Remove and Dispose Existing Sanitary Manhole					
	Quantity: 2	UOM: LF	Unit Cost:	$1,092.00	Total:	$2,184.00
	Item Notes: DEMOLITION					

16	Standard Manhole w/ USF 420-C Ring & Cover (Depth 0'-6')					
	Quantity: 1	UOM: EA	Unit Cost:	$5,432.00	Total:	$5,432.00
	Item Notes: SEWER					
17	Standard Manhole w/ USF 420-C Ring & Cover (Depth 6'-8')					
	Quantity: 7	UOM: EA	Unit Cost:	$6,552.00	Total:	$45,864.00
	Item Notes: SEWER					
18	Standard Manhole w/ USF 420-C Ring & Cover (Depth 8'-10')					
	Quantity: 6	UOM: EA	Unit Cost:	$7,952.00	Total:	$47,712.00
	Item Notes: SEWER					
19	Standard Manhole w/ USF 420-C Ring & Cover (Depth 10'-12')					
	Quantity: 5	UOM: EA	Unit Cost:	$12,152.00	Total:	$60,760.00
	Item Notes: SEWER					
20	Standard Manhole w/ USF 420-C Ring & Cover (Depth 12'-14')					
	Quantity: 1	UOM: EA	Unit Cost:	$12,152.00	Total:	$12,152.00
	Item Notes: SEWER					
21	Type A Drop Manhole w USF 420-C Ring & Cover (Depth 6'-8')					
	Quantity: 1	UOM: EA	Unit Cost:	$9,212.00	Total:	$9,212.00
	Item Notes: SEWER					
22	Type A Drop Manhole w USF 420-C Ring & Cover (Depth 10'-12')					
	Quantity: 1	UOM: EA	Unit Cost:	$15,512.00	Total:	$15,512.00
	Item Notes: SEWER					
23	Type A Drop Manhole w USF 420-C Ring & Cover (Depth 12'-14')					
	Quantity: 1	UOM: EA	Unit Cost:	$15,792.00	Total:	$15,792.00
	Item Notes: SEWER					
24	Conflict Manhole w/ USF 420-C Ring & Cover (Depth 8'-10'), COMPLETE including casing pipe					
	Quantity: 2	UOM: EA	Unit Cost:	$15,232.00	Total:	$30,464.00
	Item Notes: SEWER					
25	Conflict Manhole w/ USF 420-C Ring & Cover (Depth 10'-12'), COMPLETE including casing pipe					
	Quantity: 2	UOM: EA	Unit Cost:	$15,232.00	Total:	$30,464.00
	Item Notes: SEWER					
26	Core and Connect Gravity Sewer to Existing Sanitary Manhole					
	Quantity: 1	UOM: EA	Unit Cost:	$34,720.00	Total:	$34,720.00
	Item Notes: SEWER					

27	Core and Connect Force Main to Existing Sanitary Manhole					
	Quantity: 1	UOM: EA	Unit Cost:	$2,800.00	Total:	$2,800.00
	Item Notes: SEWER					
28	8-inch SDR 26 PVC (Depth 0'-6') Sanitary Gravity Sewer					
	Quantity: 270	UOM: LF	Unit Cost:	$166.32	Total:	$44,906.40
	Item Notes: SEWER					
29	8-inch SDR 26 PVC (Depth 6-8') Sanitary Gravity Sewer					
	Quantity: 1419	UOM: LF	Unit Cost:	$148.40	Total:	$210,579.60
	Item Notes: SEWER					
30	8-inch SDR 26PVC (Depth 8'-10') Sanitary Gravity Sewer					
	Quantity: 1379	UOM: LF	Unit Cost:	$183.40	Total:	$252,908.60
	Item Notes: SEWER					
31	8-inch SDR 26PVC (Depth 10'-12') Sanitary Gravity Sewer					
	Quantity: 290	UOM: LF	Unit Cost:	$334.32	Total:	$96,952.80
	Item Notes: SEWER					
32	8-inch C900 DR18 PVC (Depth 10'-12') Sanitary Gravity Sewer					
	Quantity: 210	UOM: LF	Unit Cost:	$347.76	Total:	$73,029.60
	Item Notes: SEWER					
33	8-inch C900 DR18 PVC (Depth 12'-14') Sanitary Gravity Sewer					
	Quantity: 240	UOM: LF	Unit Cost:	$347.76	Total:	$83,462.40
	Item Notes: SEWER					
34	10-inch DIP (Depth 10'-12') Sanitary Gravity Sewer					
	Quantity: 39	UOM: LF	Unit Cost:	$370.16	Total:	$14,436.24
	Item Notes: SEWER					
35	Furnish and Install 4-inch DIP Sanitary Sewer Force Main					
	Quantity: 1400	UOM: LF	Unit Cost:	$59.36	Total:	$83,104.00
	Item Notes: SEWER					
36	Furnish and Install 6-inch DIP Sanitary Sewer Force Main					
	Quantity: 40	UOM: LF	Unit Cost:	$64.96	Total:	$2,598.40
	Item Notes: SEWER					
37	Furnish and Install 6-inch HDPE Sanitary Sewer Forcemain via HDD					
	Quantity: 240	UOM: LF	Unit Cost:	$211.68	Total:	$50,803.20
	Item Notes: SEWER					

38	Furnish and Install DIP Fittings					
	Quantity: 1	UOM: TN	Unit Cost:	$19,600.00	Total:	$19,600.00
	Item Notes: SEWER					
39	Furnish and Install Air Release Valve and Concrete Vault					
	Quantity: 1	UOM: EA	Unit Cost:	$15,680.00	Total:	$15,680.00
	Item Notes: SEWER					
40	Furnish and Install 6-inch PVC SDR 26 single sanitary sewer lateral from gravity main to cleanout assembly at the R/W line, including all cleanout fittings in bid item					
	Quantity: 27	UOM: EA	Unit Cost:	$5,320.00	Total:	$143,640.00
	Item Notes: SEWER					
41	Private Property Septic Tank to Sewer Conversion - Install 6-inch PVC SDR 26 single sanitary sewer lateral from building to cleanout or manhole at R/W, necessary cleanouts, restoration of impacted surfaces and site features, protection of existing site, individual plumbing permits, septic tank abandonment					
	Quantity: 1	UOM: AL	Unit Cost:	$380,000.00	Total:	$380,000.00
	Item Notes: SEWER					
42	Furnish and Install Precast Concrete Wetwell					
	Quantity: 1	UOM: EA	Unit Cost:	$260,960.00	Total:	$260,960.00
	Item Notes: LIFT STATION					
43	Furnish Install Wetwell Access Hatch					
	Quantity: 1	UOM: EA	Unit Cost:	$22,960.00	Total:	$22,960.00
	Item Notes: LIFT STATION					
44	Furnish and Install Precast Concrete Valve Vault					
	Quantity: 1	UOM: EA	Unit Cost:	$36,960.00	Total:	$36,960.00
	Item Notes: LIFT STATION					
45	Furnish and Install Valve Vault Access Hatch					
	Quantity: 1	UOM: EA	Unit Cost:	$14,560.00	Total:	$14,560.00
	Item Notes: LIFT STATION					
46	Furnish and Install 5HP Submersible Pump					
	Quantity: 2	UOM: EA	Unit Cost:	$98,000.00	Total:	$196,000.00
	Item Notes: LIFT STATION					
47	Furnish and Install Pump Hardware - Base Elbows, Base Plates, Guide Rails, Brackets, Lifting Chains, Cable Holder Assembly					
	Quantity: 1	UOM: LS	Unit Cost:	$44,800.00	Total:	$44,800.00
	Item Notes: LIFT STATION					
48	Furnish and Install 4-inch Plug Valve					
	Quantity: 4	UOM: EA	Unit Cost:	$2,800.00	Total:	$11,200.00
	Item Notes: LIFT STATION					

49	Furnish and Install 2-inch Check Valve					
	Quantity: 2	UOM: EA	Unit Cost:	$980.00	Total:	$1,960.00
	Item Notes: LIFT STATION					
50	Furnish and Install 4-inch Piping and Full Body Fittings					
	Quantity: 1	UOM: LS	Unit Cost:	$89,600.00	Total:	$89,600.00
	Item Notes: LIFT STATION					
51	Furnish and Install Level Transducer Sensor					
	Quantity: 1	UOM: EA	Unit Cost:	$1,008.00	Total:	$1,008.00
	Item Notes: LIFT STATION					
52	Furnish and Install Level Switch Floats					
	Quantity: 1	UOM: EA	Unit Cost:	$1,008.00	Total:	$1,008.00
	Item Notes: LIFT STATION					
53	Furnish and Install Pressure Gauges at Valve Vault					
	Quantity: 1	UOM: EA	Unit Cost:	$1,008.00	Total:	$1,008.00
	Item Notes: LIFT STATION					
54	Furnish and Install Vent Assembly with Activated Carbon Filter					
	Quantity: 1	UOM: EA	Unit Cost:	$1,008.00	Total:	$1,008.00
	Item Notes: LIFT STATION					
55	Funish and Install Custom Drop Bowl					
	Quantity: 1	UOM: EA	Unit Cost:	$1,120.00	Total:	$1,120.00
	Item Notes: LIFT STATION					
56	Furnish ahd Install 2-inch PVC Drain with P-trap					
	Quantity: 2	UOM: EA	Unit Cost:	$1,400.00	Total:	$2,800.00
	Item Notes: LIFT STATION					
57	Furnish and Install Concrete Slab at Lift Station					
	Quantity: 25	UOM: SY	Unit Cost:	$4,269.44	Total:	$106,736.00
	Item Notes: LIFT STATION					
58	Furnish and Install Steel Picket Fence and Gate					
	Quantity: 130	UOM: LF	Unit Cost:	$33.60	Total:	$4,368.00
	Item Notes: LIFT STATION					
59	Furnish and Place 3/4-inch Washed Rock Over Weed Barrier					
	Quantity: 50	UOM: SY	Unit Cost:	$19.60	Total:	$980.00
	Item Notes: LIFT STATION					

60	Furnish and Install 2-inch Water Service, Water Meter, Meter Box, Backflow Preventer, and Hose Bib					
	Quantity: 20	UOM: LF	Unit Cost:	$154.00	Total:	$3,080.00
	Item Notes: LIFT STATION					
61	Furnish and Install Concrete Pavement (Lift Station Entrance)					
	Quantity: 35	UOM: SY	Unit Cost:	$545.44	Total:	$19,090.40
	Item Notes: LIFT STATION					
62	Furnish and Install Simpson's Stopper Shrub (6' OAH)					
	Quantity: 36	UOM: EA	Unit Cost:	$123.20	Total:	$4,435.20
	Item Notes: LIFT STATION					
63	Furnish and Install Electrical Power, Wire, Grounding Complete					
	Quantity: 1	UOM: LS	Unit Cost:	$28,000.00	Total:	$28,000.00
	Item Notes: LIFT STATION ELECTRICAL					
64	Furnish and Install Electrical Control and Instrumentation Conduit, Wire Complete					
	Quantity: 1	UOM: LS	Unit Cost:	$28,000.00	Total:	$28,000.00
	Item Notes: LIFT STATION ELECTRICAL					
65	Furnish and Install 100 amp Main Disconnect/transfer Swith, FPL Meter, Equipment Racks, Jboxes, Antenna Assy. Complete					
	Quantity: 1	UOM: LS	Unit Cost:	$28,000.00	Total:	$28,000.00
	Item Notes: LIFT STATION ELECTRICAL					
66	Furnish and Install Control Panel with PLC / RTU, Pump Controler and Install Terminal Connection Panels Complete					
	Quantity: 1	UOM: LS	Unit Cost:	$103,600.00	Total:	$103,600.00
	Item Notes: LIFT STATION ELECTRICAL					
67	Furnish and Install Control Instrumentation (PIT, Floats and Level Sensor) Complete					
	Quantity: 1	UOM: LS	Unit Cost:	$103,600.00	Total:	$103,600.00
	Item Notes: LIFT STATION ELECTRICAL					
68	PCU/RTU Programming at Cotnrol Panel / Owner Central Computer					
	Quantity: 1	UOM: LS	Unit Cost:	$36,400.00	Total:	$36,400.00
	Item Notes: LIFT STATION ELECTRICAL					
69	Furnish & Install Stabilized Subgrade (12-inch)					
	Quantity: 4445	UOM: SY	Unit Cost:	$7.25	Total:	$32,226.25
	Item Notes: RESTORATION					
70	Furnish & Install Limerock Base (8-inch)					
	Quantity: 4100	UOM: SY	Unit Cost:	$44.26	Total:	$181,466.00
	Item Notes: RESTORATION					

71	Furnish and Install Optional Base Group 12 (FDOT R/W)					
	Quantity: 345	UOM: SY	Unit Cost:	$63.84	Total:	$22,024.80
	Item Notes: RESTORATION					
72	Furnish & Place Asphalt Pavement Type SP 12.5 1st Lift (1-1/4-inch)					
	Quantity: 4100	UOM: SY	Unit Cost:	$13.52	Total:	$55,432.00
	Item Notes: RESTORATION					
73	Furnish & Place Asphalt Pavement Type SP 9.5 2nd Lift (3/4-inch lifts)					
	Quantity: 9700	UOM: SY	Unit Cost:	$12.40	Total:	$120,280.00
	Item Notes: RESTORATION					
74	Furnish & Place Asphalt Pavement Type SP 9.5 (1-inch lifts) (FDOT R/W)					
	Quantity: 1195	UOM: SY	Unit Cost:	$13.52	Total:	$16,156.40
	Item Notes: RESTORATION					
75	Furnish & Place Asphalt Pavement Type FC 9.5 (1-inch lifts) (FDOT R/W)					
	Quantity: 850	UOM: SY	Unit Cost:	$21.36	Total:	$18,156.00
	Item Notes: RESTORATION					
76	Restoration of Existing Concrete Sidwalk					
	Quantity: 20	UOM: SY	Unit Cost:	$25.20	Total:	$504.00
	Item Notes: RESTORATION					
77	Furnish & Install Sod (Match Existing)					
	Quantity: 520	UOM: SY	Unit Cost:	$10.08	Total:	$5,241.60
	Item Notes: RESTORATION					
78	Furnish and Install Pavement Striping and Symbols					
	Quantity: 1	UOM: LS	Unit Cost:	$16,801.20	Total:	$16,801.20
	Item Notes: RESTORATION					
79	Tree Removal / Relocation					
	Quantity: 2	UOM: EA	Unit Cost:	$1,688.40	Total:	$3,376.80
	Item Notes: TREE RESTORATION					
80	Tree Removal / Replacement					
	Quantity: 2	UOM: EA	Unit Cost:	$1,688.40	Total:	$3,376.80
	Item Notes: TREE RESTORATION					
81	Tree Protection					
	Quantity: 140	UOM: EA	Unit Cost:	$19.60	Total:	$2,744.00
	Item Notes: TREE RESTORATION					

Response Total: $4,816,773.89

pompano beach
Florida's Warmest Welcome

CITY OF POMPANO BEACH
BUSINESS TAX RECEIPT
FISCAL YEAR: 2024 - 2025

Business Tax Receipt Valid from: October 1, 2024 through September 30, 2025

4476521
DBF CONSTRUCTION LLC
240 SW 12 AVE STE 2

POMPANO BEACH FL 33069

9/11/2024

THIS IS NOT A BILL

THIS IS YOUR BUSINESS TAX RECEIPT. PLEASE POST IN A CONSPICUOUS PLACE AT THE BUSINESS LOCATION.

BUSINESS OWNER: DBF CONSTRUCTION LLC
BUSINESS LOCATION: 240 SW 12 AV 2 POMPANO BEACH FL

RECEIPT NO:	**CLASSIFICATION**
25-00107773	**ENGINEERING CONSTRUCTION (1A-4C)**
25-00107774	**CONTRACTOR GENERAL (GC)**

NOTICE: A NEW APPLICATON MUST BE FILED IF THE BUSINESS NAME, OWNERSHIP OR ADDRESS IS CHANGED. THE ISSUANCE OF A BUSINESS TAX RECEIPT SHALL NOT BE DEEMED A WAIVER OF ANY PROVISION OF THE CITY CODE NOR SHALL THE ISSUANCE OF A BUSINESS TAX RECEIPT BE CONSTRUED TO BE A JUDGEMENT OF THE CITY AS TO THE COMPETENCE OF THE APPLICANT TO TRANSACT BUSINESS. **THIS DOCUMENT CANNOT BE ALTERED**.

BUSINESS TAX RECEIPTS EXPIRE SEPTEMBER 30TH OF EACH YEAR

BROWARD COUNTY LOCAL BUSINESS TAX RECEIPT

115 S. Andrews Ave., Rm. A-100, Ft. Lauderdale, FL 33301-1895 – 954-357-4829

VALID OCTOBER 1, 2024 THROUGH SEPTEMBER 30, 2025

Receipt #: 180-258258

Business Name: DBF CONSTRUCTION LLC

Business Type: GENERAL CONTRACTOR (GENERAL CONTRACTOR)

Owner Name: ILIA LYSSENKO

Business Location: 240 SW 12TH AVE STE 2
POMPANO BEACH

Business Opened: 10/09/2013

State/County/Cert/Reg: CGC1512467

Exemption Code:

Business Phone: 9545321918

Rooms	Seats	Employees	Machines	Professionals
		8		

	For Vending Business Only					
	Number of Machines:			Vending Type:		
Tax Amount	Transfer Fee	NSF Fee	Penalty	Prior Years	Collection Cost	Total Paid
27.00	0.00	0.00	0.00	0.00	0.00	27.00

Receipt Fee	27.00
Packing/Processing/Canning Employees	0.00

THIS RECEIPT MUST BE POSTED CONSPICUOUSLY IN YOUR PLACE OF BUSINESS

THIS BECOMES A TAX RECEIPT

WHEN VALIDATED

This tax is levied for the privilege of doing business within Broward County and is non-regulatory in nature. You must meet all County and/or Municipality planning and zoning requirements. This Business Tax Receipt must be transferred when the business is sold, business name has changed or you have moved the business location. This receipt does not indicate that the business is legal or that it is in compliance with State or local laws and regulations.

Mailing Address:

DBF CONSTRUCTION LLC
240 SW 12TH AVE STE 2
POMPANO BEACH, FL
33069-3241

Receipt #13B-23-00001837
Paid 08/02/2024 27.00

2024 - 2025

Non-Sewer Area C Sanitary Sewer Improvements

RFP25-040

June 5, 2025

DBF Construction,LLC

240 SW 12th Ave, Suite 2

Pompano Beach, FL 33069

Mark Giannetti

(954)892-1697

Table of Contents

1. Letter of Interest 2

2. Understanding of the Project 3

3. Organizational Chart and Principal/Key Team Members 5

4. Statement of Skills and Experience of Project Team 6

5. Copy of State of Florida General Contracting License 7

6. Unique Capabilities 8

7. Environmental Compliance 10

8. Bonding Capacity 11

9. Conflicts of Interest 12

10. Litigation 13

11. Office Locations 14

12. Reference 15

13. Resources and Methodology 16

14. Cost ……20

Letter of Interest – Non-Area Sewer C Sanitary Improvement Project

DBF Construction LLC
240 SW 12th Ave, Suite 2
Pompano Beach, FL 33069
Phone: 954-532-1918
Email: mark@dbf-construction.com
Federal Tax I.D.: 20-5301466

DBF Construction LLC is pleased to submit this Letter of Interest for the upcoming Non-Area Sewer C Sanitary Improvement Project. As a contractor specializing exclusively in sewer, drainage, and underground infrastructure, we are excited about the opportunity to contribute our expertise to a project that aligns directly with our core capabilities.

We bring substantial experience working within the City of Pompano Beach, most notably through the successful completion of the Lyons Park Sewer Expansion project. This effort involved the installation of over 16,000 linear feet of deep gravity sewer via open cut methods, directional drilling of gravity sewer connections to a lift station, and complete demolition and rehabilitation of Lift Station 73 and associated vaults, including the installation of a double sewer force main bypass. Our work also included 475 individual sewer lateral abandonments and hook-ups—ranging from rerouting on private property to city right-of-way connections—executed with minimal disruption to residents.

Throughout the project, our team managed complex permitting processes, maintained clear and consistent communication with property owners, and delivered high-precision surface restoration involving pool decks, driveways, and other sensitive residential structures.

Our familiarity with the subsurface conditions in the Non-Area Sewer C region, particularly along Powerline Road, positions us to deliver this project efficiently and proactively. We recognize the importance of strategic planning, effective stakeholder engagement, seamless permit coordination, and restoration approaches customized to residential environments.

DBF Construction LLC is fully committed to providing the services outlined herein and delivering exceptional results. We take great pride in executing high-quality infrastructure improvements while minimizing public impact, and we are confident in our ability to support the City's goals for this important initiative.

Thank you for your consideration. We look forward to the opportunity to partner with the City of Pompano Beach on this critical infrastructure project.

Sincerely

Mark Giannetti
President

Understanding of the Project– Non-Area Sewer C Sanitary Improvement Project

DBF Construction possesses a clear, practical understanding of the scope, objectives, and community impact of the Non-Area Sewer C project. The primary goal of this initiative is to transition commercial properties from outdated septic systems to the municipal sewer network. This transition will enhance environmental safety, improve public health, and increase the reliability of local infrastructure, while enabling more effective long-term maintenance by the utilities department.

Scope of Work

The project entails:

- **Septic Tank Abandonment and Disposal**
  Complete removal and disposal of existing septic systems in full compliance with all environmental regulations.
- **Sewer Lateral Installation**
  Installation of new sewer laterals from the main line to individual properties, conducted with minimal disruption to property occupants.
- **System Re-Routing**
  Re-routing rear-yard sewer systems to front-yard tie-ins, often requiring work around or beneath existing features such as sheds, pool decks, driveways, and landscaping.
- **Property Restoration**
  Full restoration of affected areas post-installation, including replacement of concrete, pavers, sod, and other surface features.
- **Stakeholder Coordination**
  Ongoing coordination with residents, inspectors, utility providers, and city officials to ensure smooth execution and on-time completion.
- **Open-Cut Gravity Sewer Installation**
  Execution of open-cut sewer installations in high-traffic areas, including Powerline Road, a county road where DBF has extensive experience managing traffic and excavation challenges.
- **Lift Station Installation**
  Complete installation of new lift stations and electrical components. DBF is currently completing the demolition and installation of two master lift stations for the City of Opa-locka, and has recently completed two pump station rehabilitations and bypasses for the City of Pompano Beach.
- **Directional Drilling**
  Although directional drilling is less common in this scope, DBF has successfully completed multiple installations in partnership with JJD Contracting, our highly qualified subcontractor.

Community-Focused Approach

DBF recognizes that this is more than a technical project—it's a community-facing initiative. Our approach emphasizes:

- Open communication with affected businesses and property owners
- Efficient and proactive permitting processes
- Precision excavation in sensitive or heavily developed areas

Proven Track Record

DBF has a strong history of delivering complex infrastructure projects, including:

- **Lyons Park Project – City of Pompano Beach (2024):**
  Installation of over 16,000 linear feet of open-cut gravity sewer main and a 14" directional drill through a highly sensitive easement, along with 475 individual sewer connections. The project also included a full lift station rehabilitation (Lift Station 73) and dual sewer bypass.
- **Septic System Abandonments – Broward County:**
  Over the past decade, DBF has successfully managed the abandonment of more than 1,400 septic tanks and private-side sewer systems throughout the county.

Commitment to Excellence

We are fully committed to:

- Ensuring the safety of our crews and the public
- Meeting all project deadlines
- Minimizing public disruption
- Maintaining strict compliance with all environmental and regulatory requirements throughout every phase of the project

Organizational Chart and Principal/Key Team Members- Non-Area Sewer C Sanitary Improvement Project

- **Mark Giannetti** – *Owner / On-Site Project Manager*
  Will be dedicated full-time to on-site construction, managing day-to-day operations, and overseeing the entire build process.

- **Stephany Campo** – *Chief Financial Officer (CFO)*
  Responsible for Certified Payrolls (Davis-Beacon compliance), insurance documentation, releases of liens, and other financial administrative tasks.

- **Alejandra Villatoro** – *Assistant Project Manager / Executive Assistant*
  Supports project management and clerical functions including scheduling, material deliveries, coordination with suppliers and subcontractors, payment applications, shop drawing submittals, and permitting processes.

- **Manuel Gordillo** – *DBF Superintendent*
  Oversees field supervision, coordinates trades, ensures schedule adherence, and manages quality control on behalf of DBF.

- **Primo Hernandez** – *DBF Sewer and Lift Station Foreman*
  Leads all sewer and lift station construction activities, managing crew performance and task execution.

- **Nicanor Mojica** – *Safety Officer*
  Ensures compliance with all safety protocols, conducts site inspections, safety meetings, and enforces OSHA standards.

- **Mark Myers** – *MOT Qualifier and Specialist*
  Manages Maintenance of Traffic (MOT) plans. Ensures safe and compliant traffic control on-site.

Statement of Skills and Experience of Project Team- Non-Area Sewer C Sanitary Improvement Project

Mark Giannetti
Owner, DBF Construction

With over 30 years of experience in underground construction, I bring a deep understanding of all ground conditions and depths. For the past 15 years, I've had the privilege of working extensively throughout the City of Pompano Beach, completing some of its largest and most complex underground infrastructure projects.

At DBF Construction, I personally manage every project from start to finish, directly overseeing all day-to-day construction activities. My hands-on approach ensures that every detail meets the highest standards of quality and safety. I also maintain direct communication with city officials and residents to foster a safe, efficient, and community-focused work environment.

Our team is our greatest strength. From field supervisors to pipe crews and office staff, many of us have been with DBF for over 15 years. This longevity reflects our deep expertise and a shared commitment to excellence on every job.

Our success at DBF is not ours alone—it's the result of a strong and lasting partnership with the City of Pompano Beach. Together, we've consistently demonstrated that there's no challenge we can't overcome. When we work as one, there's no limit to what we can accomplish.

Please see the attached resume for more details on my experience and qualification

Mark Giannetti / President

240 SW 12th Ave., Ste 2
Pompano Beach, FL 33069
954-532-1918
Mark@dbf-construction.com

With over 30 years of comprehensive experience in the underground construction industry, Mark Giannetti has served in diverse leadership roles including Project Manager, Estimator, Superintendent, Foreman, General Partner, and Owner. His career has focused extensively on infrastructure projects in collaboration with governmental agencies throughout Florida.

Since relocating to South Florida, Mark has played a pivotal role in the success of DBF Construction, LLC. Under his leadership, the company has installed over **1 million linear feet** of underground utilities using open-cut methods. These installations include a wide range of system types such as **gravity sewer lines, sewer force mains, and vacuum sewer systems**.

Additionally, his project oversight includes the successful completion of more than **35 sewer pump stations** and over **100,000 linear feet** of directional drilling, reflecting his depth of expertise in both traditional and trenchless installation techniques.

Mark brings a strong track record of quality, efficiency, and innovation to every project he undertakes, consistently delivering infrastructure solutions that meet the highest industry standards.

PROJECT LIST:

City Of Pompano Beach

- NE 27th Ave & 16th St Storm Water Improvements 2025 (9,500 LF of 15" – 24" RCP, 12,250 SY of Swales and Sod, 15,580 SY of Asphalt Road Mill/Overlay)
- New parking lot at Senior Center 2025 (Lighting, Landscaping/irrigation, 15" RCP, 45 Parking stalls, curbing)
- NW 22nd St Drainage Improvements 2025 (1,000 LF of 15" RCP W/ 8'x5' Ex fill trench, complete road restoration and Mill and Overlay)
- Lyons Park Stormwater and Wastewater Improvements 2022-2024 (10,000 +/- LF of open cut 8"-12" gravity Sewer, 13,000 +/- LF of RCP Drainage, Boat Ramp and Seawall installations, 6' x 6' Box Culvert, 476 Private Property sewer abandonments and installing Road and Rock restoration)
- Lift Station #73 Double sewer bypass, Complete Demo of Wet well and Vault, Complete Rehab of Wet well and Vault, Rebuild of inner base slab and re-establish slopes, All new base plates, Base elbows all pipe valves fittings and pumps in wet well and vault
- Bay Dr. Force Main 2024 (Connection to valve vault, Installation of 2,400 LF of 8" Force Main, Road and Rock restoration)
- Powerline Road Emergency Force Main Repair (Multiple Line Stops, Repair of 12" Broken Force Main, Complete DOT Road Replacement of Powerline Road)
- Cypress Road Force Main Repair 2023 (Multiple Line Stops, Repair and Cut in Plug Valves on 16" Force Main, Complete Road Replacement of Cypress Road)
- 14th St Causeway Reclaim Main Repair (Repair of 24" Reclaimed Water Main, Cut in 24" Gate Valve)

City Of Opa Locka

- Master Pump Station #16 (Complete Demo, Bypass, Dewatering, Sheeting, Installation of new master pump station and panels, gravity sewer, Force Main Installation)
- Master Pump Station #9 (Complete Demo, Bypass, Dewatering, Sheeting, Installation of new master pump station and panels, gravity sewer, Force Main Installation)

REFERENCES:

- Dr. Tammy Good, CIP Manager-City of Pompano Beach 954-650-7783
- Nathaniel Watson, Utilities Superintendent 954-779-0952
- Bobby Clayton, Wastewater Pumping Manager 954-786-4154

Ron DeSantis, Governor

Melanie S. Griffin, Secretary

STATE OF FLORIDA
DEPARTMENT OF BUSINESS AND PROFESSIONAL REGULATION

CONSTRUCTION INDUSTRY LICENSING BOARD

THE GENERAL CONTRACTOR HEREIN IS CERTIFIED UNDER THE
PROVISIONS OF CHAPTER 489, FLORIDA STATUTES

LYSSENKO, ILIA V

DBF CONSTRUCTION LLC
240 SW 12TH AVENUE, SUITE 2
POMPANO BEACH FL 33069

LICENSE NUMBER: CGC1512467

EXPIRATION DATE: AUGUST 31, 2026

Always verify licenses online at MyFloridaLicense.com

ISSUED: 06/26/2024

Do not alter this document in any form.

This is your license. It is unlawful for anyone other than the licensee to use this document.

Unique Capabilities- Non-Area Sewer C Sanitary Improvement Project

What sets us apart for the Non-Sewer Area C Project is our direct, recent experience in this exact area. My team and I have just completed a deep drainage project approximately 1,000 feet west of Powerline, providing us with an in-depth understanding of the ground conditions and existing sewer infrastructure. This proximity gives us a logistical and technical advantage in planning and execution. Furthermore, I maintain strong relationships with many local business owners who will be directly impacted and ultimately benefit from this project, allowing for better communication and coordination throughout the construction process.

Advanced Sewer Installation Capabilities

- Laser-Guided Bore/Grade Control Systems
  Ensure precision in pipe slope alignment — essential for gravity sewer systems.
- Trenchless Technologies
  Pipe jacking, and horizontal directional drilling (HDD), provided through our qualified subcontractor JJD.
- Real-Time Monitoring Systems
  Integration of GPS tracking, pressure sensors, and digital performance logs enhances safety and operational accuracy.

Specialized Equipment & Techniques

- In-House Dewatering Systems
  Our proprietary, state-of-the-art system is backed by 24-hour emergency support from Consolidated Pump, ensuring continuous and reliable operation.
- Custom Shoring & Dewatering Methods
  We utilize tailored techniques for each project site, optimizing safety and efficiency.

Skilled Team & Certifications

- Specialist Workforce
  Our team includes confined space experts, geotechnical engineers, and certified

safety officers, ensuring full compliance and high-quality execution in challenging environments.

Environmental & Community Impact Minimization

- Noise, Dust & Vibration Control
  We implement detailed mitigation strategies to minimize disruption to the surrounding community.
- Community Outreach
  We engage proactively with nearby residents and businesses to maintain transparency and address concerns before they become issues.

Schedule & Logistics Enhancements

- 24/7 or Off-Hour Work Capabilities
  Ideal for minimizing disruption in urban or high-traffic zones.
- Accelerated Scheduling Options
  Availability of additional crews and parallel workflows enables us to meet or exceed tight project timelines.
- Integrated Logistics Planning
  Includes comprehensive coordination of material deliveries, spoil removal, and traffic control for seamless project flow.

Comprehensive Support Services

- Utility Locating & Coordination
  Delivered either in-house or via specialized subcontractors with a detailed plan to prevent utility conflicts.
- Permitting Assistance
  Full support for securing environmental, traffic, and agency approvals.
- Post-Construction Services
  Includes as-built drawings, maintenance documentation, and warranty support to ensure long-term performance and client satisfaction.

Environmental Compliance- Non-Area Sewer C Sanitary Improvement Project

This is to certify that DBF Construction has not received any environmental violations, notices, or dispositions from any local, state, or federal environmental regulatory agencies. The company remains in full compliance with all applicable environmental laws and regulations.

DBF Construction is committed to maintaining responsible environmental practices in all aspects of its operations.

BID BOND

BY THIS BOND, We DBF Construction, LLC, as Principal ("PRINCIPAL") and NGM INsurance Company, an entity duly organized under the laws of the State of Florida, as Surety ("SURETY"), are held and firmly bound unto the City of Pompano Beach ("CITY") in the sum of five percent (5%) of the Bid amount, for the payment of which PRINCIPAL and SURETY bind ourselves, our heirs, executors, administrators, successors and assigns, jointly and severally, as set forth below.

WHEREAS, PRINCIPAL has submitted a bid for Bid No. RFP25-040.

THE CONDITIONS OF THIS BOND are such that CITY accepts the bid of PRINCIPAL and PRINCIPAL enters into a contract with CITY in accordance with the terms of such bid, and gives such bond or bonds as may be specified in the bidding or Contract Documents with good and sufficient surety for the faithful performance of such Contract and for the prompt payment of labor and material furnished in the prosecution of the Contract.

THEN THIS OBLIGATION SHALL BE NULL AND VOID. However, if CITY accepts the bid of PRINCIPAL and PRINCIPAL fails to timely satisfy the conditions set forth above, then PRINCIPAL and SURETY, jointly and severally, shall be liable to CITY for the full sum of this Bond which shall be forfeited to CITY as liquidated damages, not a penalty, as a result of PRINCIPAL's failure to comply with the bid instructions and conditions, regardless of whether CITY ultimately decides to change the Project requirements or resolicit bids.

The remedies are not to be construed as CITY exclusive remedies for PRINCIPAL's failure to enter into a contract with CITY, but shall be deemed supplemental to all remedies available to CITY at law or otherwise.

No right of action shall accrue on this Bond to or for the use of any person or entity other than CITY.

THE REMAINDER OF THE PAGE IS INTENTIONALLY LEFT BLANK

MAIN STREET AMERICA INSURANCE | Trusted Choice

POWER OF ATTORNEY

KNOW ALL PARTIES BY THESE PRESENTS: That NGM Insurance Company, a Florida corporation having its principal office in the City of Jacksonville, State of Florida, pursuant to Article IV, Section 2 of the By-Laws of said Company, to wit:

> "Article IV, Section 2. The board of directors, the president, any vice president, secretary, or the treasurer shall have the power and authority to appoint attorneys-in-fact and to authorize them to execute on behalf of the company and affix the seal of the company thereto, bonds, recognizances, contracts of indemnity or writings obligatory in the nature of a bond, recognizance or conditional undertaking and to remove any such attorneys-in-fact at any time and revoke the power and authority given to them. "

does hereby make, constitute and appoint **Angelo G. Zervos, Courtney Saunders** ----------

its true and lawful Attorneys-in-fact, to make, execute, seal and deliver for and on its behalf, and as its act and deed, bonds, undertakings, recognizances, contracts of indemnity, or other writings obligatory in nature of a bond subject to the following limitation:

1. **No one bond to exceed Twenty Million Dollars ($20,000,000.00)**

and to bind NGM Insurance Company thereby as fully and to the same extent as if such instruments were signed by the duly authorized officers of NGM Insurance Company; the acts of said Attorney are hereby ratified and confirmed.

This power of attorney is signed and sealed by facsimile under and by the authority of the following resolution adopted by the Directors of NGM Insurance Company at a meeting duly called and held on the 2nd day of December 1977.

> Voted: That the signature of any officer authorized by the By-Laws and the company seal may be affixed by facsimile to any power of attorney or special power of attorney or certification of either given for the execution of any bond, undertaking, recognizance or other written obligation in the nature thereof; such signature and seal, when so used being hereby adopted by the company as the original signature of such office and the original seal of the company, to be valid and binding upon the company with the same force and effect as though manually affixed.

IN WITNESS WHEREOF, NGM Insurance Company has caused these presents to be signed by its Secretary and its corporate seal to be hereto affixed this 9th day of October, 2024.

NGM INSURANCE COMPANY By:

Lauren K. Powell
Vice President, Corporate Secretary

NGM INSURANCE COMPANY FOUNDED 1923 FLORIDA

State of Wisconsin,
County of Dane.

On this 9th day of October, 2024, before the subscriber a Notary Public of State of Wisconsin in and for the County of Dane duly commissioned and qualified, came Lauren K. Powell of NGM Insurance Company, to me personally known to be the officer described herein, and who executed the preceding instrument, and she acknowledged the execution of same, and being by me fully sworn, deposed and said that she is an officer of said Company, aforesaid: that the seal affixed to the preceding instrument is the corporate seal of said Company, and the said corporate seal and her signature as officer were duly affixed and subscribed to the said instrument by the authority and direction of the said Company; that Article IV, Section 2 of the By-Laws of said Company is now in force.

IN WITNESS WHEREOF, I have hereunto set my hand and affixed my official seal at Madison, Wisconsin this 9th day of October, 2024.

Mary J. Ripp

My Commission Expires February 8, 2027

MARY J. RIPP NOTARY PUBLIC STATE OF WISCONSIN

I, Nathan Hoyt, Assistant Vice President of NGM Insurance Company, do hereby certify that the above and foregoing is a true and correct copy of a Power of Attorney executed by said Company which is still in full force and effect.

IN WITNESS WHEREOF, I have hereunto set my hand and affixed the seal of said Company at Madison, Wisconsin this 22nd day of May, 2025.

Nathan Hoyt, Assistant Vice President

NGM INSURANCE COMPANY FOUNDED 1923 FLORIDA

WARNING: Any unauthorized reproduction or alteration of this document is prohibited.
TO CONFIRM VALIDITY of the attached bond please call 1-603-354-5281.
TO SUBMIT A CLAIM: Send all correspondence to 55 West Street, Keene, NH 03431
Attn: Bond Claim Dept. or call our Bond Claim Dept. at 1-603-358-1437.

Signed and sealed on May 22, 2025

Bid Number N/A

ATTEST:

Secretary

Stephany Campo
(Print/Type Name)

(Corporate Seal)

DBF Construction, LLC
(Name of Corporation)

By
(Signature and Title)

Mark Biamonetti, President
(Print Name and Title Signed Above)

IN THE PRESENCE OF:

Signature

Courtney Saunders
(Print Name)

Signature

Kenzie Smith
(Print Name)

SURETY:

By
Agent and Attorney-in-Fact

Angelo G. Zervos
(Print/Type Name)

Address: 4443 Lyons Rd Suite D-212
(Street)

Coconut Creek, FL 33073
(City/State/Zip Code)

Telephone No.: (248) 278-8067

Conflicts of Interest- Non-Area Sewer C Sanitary Improvement Project Proposal

We hereby declare that there is no actual or potential conflict of interest with respect to the project titled Non-Sewer Area C Sanitary Improvements. All parties involved in the project affirm that they have no financial, personal, or professional interests that could be perceived to influence the outcomes or integrity of the work.

Statement of No Litigation – Non-Area Sewer C Sanitary Improvement Project Bid Proposal

As part of our submission for the Non-Area Sewer C Sanitary Improvement Project, we hereby confirm that DBF Construction has not been involved in any litigation, legal proceedings, or disputes, either as a plaintiff or defendant, within the past five (5) years.

This statement is provided to demonstrate our company's consistent record of legal compliance, professional conduct, and commitment to fulfilling all contractual and regulatory obligations. We understand the importance of reliability and integrity in public works projects and are proud to affirm our clean legal standing.

Office Locations-Non-Area Sewer C Sanitary Improvement Project Proposal

DBF Construction, LLC operates from a single office location, which is located at:
240 SW 12th Avenue, Suite 2, Pompano Beach, FL 33069

References– Non-Area Sewer C Sanitary Improvement Project Bid Proposal

Matthew Kudrna
Project: Lyons Park Improvements
Title: Project Manager
Phone: 954-786-4023
Email: matthew.kudrna@copbfl.com

Bobby Clayton
Project: Lift Station 73 & Bay Drive Force Main Installation
Title: Wastewater Pumping Manager
Phone: 954-786-4154
Email: bobby.clayton@copbfl.com

Phil Hyer
Project: 24" and 36" Valve Insertions at Sewer Treatment Plant
Title: Water Plant Superintendent
Phone: 954-545-7030
Email: phil.hyer@copbfl.com

Steve Almada
Project: Emergency Deep Sewer Main Repairs (City-Wide)
Title: Wastewater Collection Manager
Phone: 954-786-5510
Email: steve.almyda@copbfl.com

Nathaniel Watson
Project: Powerline Road Emergency Force Main Repair / Multiple Emergency Sewer Water Repairs
Title: Utilities Superintendent
Phone: 954-779-0952
Email: Nathaniel.Watson@copbfl.com

Resources and Methodology– Non-Area Sewer C Sanitary Improvement Project Bid Proposal

PROLOGUE

Let me begin by saying how excited I am to take on this project and share my vision with the City of Pompano Beach and its officials. I drive these roads multiple times a day and know every phase of this project like the back of my hand. The entire process—from start to finish—is already ingrained in my mind, and I'm ready to bring it to life.

Pre-Construction Phase

Before breaking ground, DBF representatives Mark Giannetti and Manuel Gordillo will personally meet with each business owner impacted by the project—especially those affected by private sewer connections and septic tank abandonments.

Pre-construction activities will include:

- Closed-circuit television (CCTV) inspections of existing pipelines located on private property
- Detailed assessments of private sewer systems
- Coordination for rerouting and connecting properties to the new sewer infrastructure
- On-site meetings with existing utility franchises (TECO Gas, FPL, Comcast, BellSouth, etc.) to locate and identify all known existing utilities and communications within designated work limits

Alejandra Villatoro, a dedicated DBF team member, will serve as the point of contact for community relations and outreach. She will work closely with the City of Pompano Beach and act as a direct liaison to business owners—streamlining communication and minimizing complaints to ease the burden on City staff.

Construction Phases

Note: Construction phases will intentionally overlap to enhance efficiency and reduce disruption.

Phase 1: Lift Station and Electrical Installation with Force Main

This will serve as the project's initial launch point.

Key tasks:

- Dewatering setup for the wet well
- Sediment tank and erosion control installation
- Sheeting and shoring for excavation of the wet well
- Installation of the wet well and vault

Simultaneous work will be performed by:

- JJD, South Florida's top-rated directional drilling contractor, handling directional drilling
- DBF crews performing open-cut installations

Testing and flushing will follow to ensure full readiness at the time of sewer switchover and abandonment.

Estimated Duration: 60 Days

Phase 2A: Gravity Sewer Main Installation – North Section

Coverage Area: NW 18th Street and NW 19th Street

Pending City approval, night work will be conducted to:

- Minimize disruption in industrial zones
- Alleviate daytime traffic congestion

Restoration crews will follow closely to:

- Perform daily trench backfilling
- Execute pavement restoration promptly

This proven strategy—successfully used in past DBF/City collaborations—is expected to cut both project duration and costs by up to 50%.

Estimated Duration: Days

Phase 2B: Gravity Sewer Main Installation – South Section

Coverage Area: NW 16th Street and Powerline Road

- Night work will continue, pending City approval
- Restoration efforts will immediately follow installation to ensure:
    - Daily trench backfilling
    - Prompt pavement restoration

We are aware that four laterals on Powerline Road must pass beneath an existing 42" DIP force main. Based on current designs and elevations, no conflicts are anticipated. Our dewatering system and installation methods will allow us to cross below the force main with proper pitch. The gravity sewer main will also cross underneath without issue.

Estimated Duration: 60 Days

Phase 4: Septic Tank Abandonments and Hookups

This phase is one of DBF's core specialties. Multiple crews will work in parallel to:

- Install new connections
- Schedule and complete inspections
- Restore sites immediately upon inspection approval

DBF Safety Protocols:

- All open trenches and tanks will be secured using barrier walls and steel road plates
- Inspection scheduling will be coordinated with the City's Building Department
- Our in-house vacuum truck enables:
    - Flexible scheduling
    - Fast septic tank pumping
    - Immediate response to emergencies or unforeseen issues

Estimated Duration: 50-60 Days

Phase 5: Final Restoration and Close-Out

Additional DBF crews will trail pipe installation teams to perform daily restoration and ensure seamless project close-out.

Final responsibilities include:

- Asphalt paving
- Landscaping and surface restoration
- Completing all punch list items to restore the site to original—or improved—conditions

Estimated Duration: 60 Days

TOTAL PROJECT DURATION: 280-360 DAYS

City of Pompano Beach
Non Sewer Area C Sanitary Sewer Improvements
Bid Schedule

	GENERAL	Quantity	Unit	Unit Price	Amount
1	Bonds & Insurance	1	LS	$ 350,000.00	$ 350,000.00
2	Mobilization	1	LS	$ 300,000.00	$ 300,000.00
3	Maintenance of Traffic	1	LS	$ 300,000.00	$ 300,000.00
4	Consideration for Indemnification	1	LS	$ 10.00	$ 10.00
5	Permit Fees and Required Testing	1	AL	$ $ 100,000.00	$ $ 100,000.00
6	FPL Allowance	1	AL	$ $ 20,000.00	$ $ 20,000.00
7	Construction Contingency	1	AL	$ $ 165,000.00	$ $ 165,000.00

GENERAL SUBTOTAL: $ 1,235,010.00

	DEMOLITION	Quantity	Unit	Unit Price	Amount
8	Clear and Grade Grass Areas	155	SY	$ 12.32	$ 1,909.60
9	Remove and Dispose of Existing Asphalt Pavement	4445	SY	$ 10.08	$ 44,805.60
10	Remove and Dispose of Existing Limerock Base	4445	SY	$ 8.40	$ 37,338.00
11	Mill Existing Asphalt Pavement (3/4-inch)	5600	SY	$ 9.52	$ 53,312.00
12	Mill Existing Asphalt Pavement (2-inch) (FDOT R/W)	505	SY	36.40	18,382.00
13	Remove and Dispose Existing Sanitary Sewer Pipe	225	LF	$ 28.00	$ 6,300.00
14	Remove and Dispose Existing Sanitary Lateral and Cleanout	70	LF	$ 56.00	$ 3,920.00
15	Remove and Dispose Existing Sanitary Manhole	2	LF	$ 1,092.00	$ 2,184.00

DEMOLITION SUBTOTAL: $ 168,151.20

	SEWER	Quantity	Unit	Unit Price	Amount
16	Standard Manhole w/ USF 420-C Ring & Cover (Depth 0'-6')	1	EA	$ 5,432.00	$ 5,432.00
17	Standard Manhole w/ USF 420-C Ring & Cover (Depth 6'-8')	7	EA	$ 6,552.00	$ 45,864.00
18	Standard Manhole w/ USF 420-C Ring & Cover (Depth 8'-10')	6	EA	$ 7,952.00	$ 47,712.00
19	Standard Manhole w/ USF 420-C Ring & Cover (Depth 10'-12')	5	EA	$ 12,152.00	$ 60,760.00
20	Standard Manhole w/ USF 420-C Ring & Cover (Depth 12'-14')	1	EA	$ 12,152.00	$ 12,152.00
21	Type A Drop Manhole w USF 420-C Ring & Cover (Depth 6'-8')	1	EA	$ 9,212.00	$ 9,212.00
22	Type A Drop Manhole w USF 420-C Ring & Cover (Depth 10'-12')	1	EA	$ 15,512.00	$ 15,512.00
23	Type A Drop Manhole w USF 420-C Ring & Cover (Depth 12'-14')	1	EA	$ 15,792.00	$ 15,792.00
24	Conflict Manhole w/ USF 420-C Ring & Cover (Depth 8'-10'), COMPLETE including casing pipe	2	EA	$ 15,232.00	$ 30,464.00
25	Conflict Manhole w/ USF 420-C Ring & Cover (Depth 10'-12'), COMPLETE including casing pipe	2	EA	$ 15,232.00	$ 30,464.00
26	Core and Connect Gravity Sewer to Existing Sanitary Manhole	1	EA	$ 34,720.00	$ 34,720.00
27	Core and Connect Force Main to Existing Sanitary Manhole	1	EA	$ 2,800.00	$ 2,800.00
28	8-inch SDR 26 PVC (Depth 0'-6') Sanitary Gravity Sewer	270	LF	$ 166.32	$ 44,906.40
29	8-inch SDR 26 PVC (Depth 6-8') Sanitary Gravity Sewer	1419	LF	$ 148.40	$ 210,579.60
30	8-inch SDR 26PVC (Depth 8'-10') Sanitary Gravity Sewer	1379	LF	$ 183.40	$ 252,908.60
31	8-inch SDR 26PVC (Depth 10'-12') Sanitary Gravity Sewer	290	LF	$ 334.32	$ 96,952.80
32	8-inch C900 DR18 PVC (Depth 10'-12') Sanitary Gravity Sewer	210	LF	$ 347.76	$ 73,029.60
33	8-inch C900 DR18 PVC (Depth 12'-14') Sanitary Gravity Sewer	240	LF	$ 347.76	$ 83,462.40
34	10-inch DIP (Depth 10'-12') Sanitary Gravity Sewer	39	LF	$ 370.16	$ 14,436.24
35	Furnish and Install 4-inch DIP Sanitary Sewer Force Main	1400	LF	$ 59.36	$ 83,104.00
36	Furnish and Install 6-inch DIP Sanitary Sewer Force Main	40	LF	$ 64.96	$ 2,598.40
37	Furnish and Install 6-inch HDPE Sanitary Sewer Forcemain via HDD	240	LF	$ 211.68	50,803.20
38	Furnish and Install DIP Fittings	0.5	TN	$ 19,600.00	$ 19,600.00
39	Furnish and Install Air Release Valve and Concrete Vault	1	EA	$ 15,680.00	$ 15,680.00

40	Furnish and Install 6-inch PVC SDR 26 single sanitary sewer lateral from gravity main to cleanout assembly at the R/W line, including all cleanout fittings in bid item	27	EA	$ 5,320.00	$ 143,640.00
41	Private Property Septic Tank to Sewer Conversion - Install 6-inch PVC SDR 26 single sanitary sewer lateral from building to cleanout or manhole at R/W, necessary cleanouts, restoration of impacted serfaces and site features, protection of existing site, individual plumbing permits, septic tank abandonement	1	AL	$ $ 380,000.00	$ $ 380,000.00

SEWER SUBTOTAL: **$** 1,782,585.24

LIFT STATION		Quantity	Unit	Unit Price	Amount
42	Furnish and Install Precast Concrete Wetwell	1	EA	$ 260,960.00	$ 260,960.00
43	Furnish Install Wetwell Access Hatch	1	EA	$ 22,960.00	$ 22,960.00
44	Furnish and Install Precast Concrete Valve Vault	1	EA	$ 36,960.00	$ 36,960.00
45	Furnish and Install Valve Vault Access Hatch	1	EA	$ 14,560.00	$ 14,560.00
46	Furnish and Install 5HP Submersible Pump	2	EA	$ 98,000.00	$ 196,000.00
47	Furnish and Install Pump Hardware - Base Elbows, Base Plates, Guide Rails, Brackets, Lifting Chains, Cable Holder Assembly	1	LS	$ 44,800.00	$ 44,800.00
48	Furnish and Install 4-inch Plug Valve	4	EA	$ 2,800.00	$ 11,200.00
49	Furnish and Install 2-inch Check Valve	2	EA	$ 980.00	$ 1,960.00
50	Furnish and Install 4-inch Piping and Full Body Fittings	1	LS	$ 89,600.00	$ 89,600.00
51	Furnish and Install Level Transducer Sensor	1	EA	$ 1,008.00	$ 1,008.00
52	Furnish and Install Level Switch Floats	1	EA	$ 1,008.00	$ 1,008.00
53	Furnish and Install Pressure Gauges at Valve Vault	1	EA	$ 1,008.00	$ 1,008.00
54	Furnish and Install Vent Assembly with Activated Carbon Filter	1	EA	$ 1,008.00	$ 1,008.00
55	Funish and Install Custom Drop Bowl	1	EA	$ 1,120.00	$ 1,120.00
56	Furnish ahd Install 2-inch PVC Drain with P-trap	2	EA	$ 1,400.00	$ 2,800.00
57	Furnish and Install Concrete Slab at Lift Station	25	SY	$ 4,269.44	$ 106,736.00
58	Furnish and Install Steel Picket Fence and Gate	130	LF	$ 33.60	$ 4,368.00
59	Furnish and Place 3/4-inch Washed Rock Over Weed Barrier	50	SY	$ 19.60	$ 980.00
60	Furnish and Install 2-inch Water Service, Water Meter, Meter Box, Backflow Preventer, and Hose Bib	20	LF	$ 154.00	$ 3,080.00
61	Furnish and Install Concrete Pavement (Lift Station Entrance)	35	SY	$ 545.44	$ 19,090.40
62	Furnish and Install Simpson's Stopper Shrub (6' OAH)	36	EA	$ 123.20	$ 4,435.20

LIFT STATION SUBTOTAL: **$** 825,641.60

LIFT STATION ELECTRICAL		Quantity	Unit	Unit Price	Amount
63	Furnish and Install Electrical Power, Wire, Grounding Complete	1	LS	$ 28,000.00	$ 28,000.00
64	Furnish and Install Electrical Control and Instrumentation Conduit, Wire Complete.	1	LS	$ 28,000.00	$ 28,000.00
65	Furnish and Install 100 amp Main Disconnect/transfer Swith, FPL Meter, Equuipment Racks, Jboxes, Antenna Assy. Complete	1	LS	$ 28,000.00	$ 28,000.00
66	Furnish and Install Control Panel with PLC / RTU, Pump Controler and Install Terminal Connection Panels Complete.	1	LS	$ 103,600.00	$ 103,600.00
67	Furnish and Install Control Instrumentation (PIT, Floats and Level Sensor) Complete	1	LS	$ 103,600.00	$ 103,600.00
68	PCU/RTU Programming at Cotnrol Panel / Owner Central Computer	1	LS	$ 36,400.00	$ 36,400.00

LIFT STATION ELECTRICAL SUBTOTAL: **$** 327,600.00

RESTORATION		Quantity	Unit	Unit Price	Amount
69	Furnish & Install Stabilized Subgrade	4445	SY	$ 7.25	$ 32,226.25
70	Furnish & Install Limerock Base	4100	SY	44.26	181,466.00

71	Furnish and Install Optional Base Group 12 (FDOT R/W)	345	0	$ 63.84	$ 22,024.80
72	Furnish & Place Asphalt Pavement Type SP 12.5 1st Lift (1-1/4-inch lifts)	4100	SY	$ 13.52	$ 55,432.00
73	Furnish & Place Asphalt Pavement Type SP 9.5 2nd Lift (3/4-inch lifts)	9700	SY	$ 12.40	$ 120,280.00
74	Furnish & Place Asphalt Pavement Type SP 9.5 (1-inch lifts) (FDOT R/W)	1195	SY	13.52	16,156.40
75	Furnish & Place Asphalt Pavement Type FC 9.5 (1-inch lifts) (FDOT R/W)	850	SY	21.36	18,156.00
76	Restoration of Existing Concrete Sidwalk	20	SY	$ 25.20	$ 504.00
77	Furnish & Install Sod (Match Existing)	520	SY	$ 10.08	$ 5,241.60
78	Furnish and Install Pavement Striping and Symbols	1	LS	$ 16,801.20	$ 16,801.20

RESTORATION SUBTOTAL: **$** 468,288.25

TREE RESTORATION		Quantity	Unit	Unit Price	Amount
79	Tree Removal / Relocation	2	EA	$ 1,688.40	$ 3,376.80
80	Tree Removal / Replacement	2	EA	$ 1,688.40	$ 3,376.80
81	Tree Protection	140	EA	$ 19.60	$ 2,744.00

TREE RESTORATION SUBTOTAL: **$** 9,497.60

TOTAL: **$** 4,816,773.89

EXHIBIT “B”

Exhibit B
General Conditions

ARTICLE 1. DEFINITIONS.

1.01 **The Contract Documents:** The Contract Documents consist of the Agreement Form, Addenda, Supplementary Conditions, General Conditions, Documents contained in the Project Manual, Drawings, Plans, Specifications, and all modifications issued after execution of the Contract and all documents as defined in Article 9., "CONTRACT DOCUMENTS", of the Construction Agreement.

1.02 **The Owner, the Contractor, and the Project Consultant:** are those mentioned as such in the Contract Documents.

1.02.01 **Owner**: The City of Pompano Beach, Florida, (also referred to as the "City").

1.02.02 **Contractor**: The "party of the second part" to the Contract. The person, firm or corporation with whom a contract has been made with the Owner for the performance of the Work defined by the Contract Documents.

1.02.03 **Project Consultant:** The individual, partnership, corporation, association, joint venture, or any combination thereof, of properly registered professional architects, engineers or other design professionals who has entered into a contract with the Owner to provide professional services for development of the design and Contract Documents for the Work of this Project and provide Construction Contract Administration as described in the Contract Documents.

1.03 **City Engineer:** City Engineer of the City of Pompano Beach, Florida.

1.04 **Final Completion**: Means that date subsequent to the date of Substantial Completion at which time the Contractor has completed all of the Work (or designated portion thereof) in accordance with the Contract Documents as certified by the Project Consultant and/or approved by the Owner. In addition, Final Completion shall not be deemed to have occurred until any and all governmental bodies, boards, entities, etc., which regulate or have jurisdiction of the Work, have inspected, approved and certified the Work.

1.06 **Inspector:** An employee(s) of The City of Pompano Beach, Florida, referred to hereinafter as the "**Inspector,**" who(m) is/are assigned by the City Engineer to periodically inspect the Project during the construction process, and who assist(s) the City Engineer in reviewing field performance and its compliance with the Contract Documents.

1.06.01 **Resident Inspector:** An employee or subconsultant of the **Project Consultant** employed to perform either periodic or full-time specific inspection duties.

1.07 **Other Contractors**: Any person, firm or corporation with whom a Contract has been made by the Owner for the performance of any work on the site, which work is not a portion of the Work covered by the Contract.

1.08 **Owner's Representative**: The City Official who has been delegated responsibility by the City Manager to act as the City's project coordinator. (In most cases, the City Engineer shall be assigned this duty.)

1.09 **Phase**: A designated subdivision of the Work, usually with its own requirements for Substantial and Final Completion, and liquidated damages. A Phase may be designated for completion by the Owner's own forces, or by Other Contractors.

1.10 **The Project**: The total construction of which the Work performed under the Contract Documents may be the whole or a part and which may include construction by the Owner or by separate contractors.

1.11 **Punch List**: A list of items of work required to render complete, satisfactory, and acceptable the construction services provided for in the Contract Documents and created pursuant to Florida Statute 218.735(7)(a).

1.12 **Subcontractor**: A person or entity other than a materialman or laborer who enters into a Contract with Contractor for the performance of any part of Contractor's Work. The term "Subcontractor" is referred to throughout the Contract Documents as if singular in number and means a Subcontractor or an authorized representative of the Subcontractor. The term "Subcontractor" does not include a separate contractor or subcontractors of a separate contractor.

1.13 **Sub-subcontractor**: A person or entity other than a materialman or laborer who enters into a contract with a Subcontractor for the performance of any part of such Subcontractor's contract. The term "Sub-subcontractor" is referred to throughout the Contract Documents as if singular in number and means a Sub-subcontractor or an authorized representative of the Sub-subcontractor. The term "Sub-subcontractor" does not include separate subcontractors of a separate contractor.

1.14 **Submittals**: Are prepared by the Contractor or those working on his behalf (subcontractors, material suppliers, and others) to show how a particular aspect of the Work is to be fabricated and installed. The Contractor's submittals include shop drawings, product data, samples, mock-ups, test results, warranties, maintenance agreements, workmanship bonds, project photographs, record documents, field measurement data, operating and maintenance manuals, reports, certifications, periodic and final "as-builts", surveys, videos and other types of information described in the specifications.

1.15 **Substantial Completion**: The term Substantial Completion as used herein, shall mean that point at which, as certified in writing by the Project Consultant, the Work, or a designated portion thereof, is at a level of completion in substantial compliance with the Contract Documents such that the Owner or its designee can enjoy use or occupancy and can use or operate it in all respects for its intended purpose. In the event the Work includes more than one Phase, the Owner, at its discretion, may set Substantial Completion dates for each Phase and may impose provisions for liquidated damages for each Phase.

1.16 **Subconsultant:** A person or organization of properly registered professional architects, engineers, or other design professionals who has entered an agreement with the Project Consultant to furnish professional services in support of the Project Consultant's agreement with the Owner.

1.17 **Superintendent**: The executive representative for the Contractor present on the work at all times during progress, authorized to receive and fulfill instructions from the Owner and the Project Consultant and capable of superintending the work efficiently.

1.18 **Work**: The totality of the obligations, including construction and other services, imposed on the Contractor by the Contract Documents, whether completed or partially completed, and including all labor, materials, equipment, and services provided or to be provided by the Contractor to fulfill the Contractor's obligations. The Work may constitute the whole or a part of the Project.

1.19 **Written Notice**: Shall be deemed to have been duly served if delivered in person to the individual or to a member of the firm or to an officer of the corporation for whom it is intended, if delivered at or sent by certified mail or other traceable delivery service to the last business address known to him who gives notice. Trackable electronic transmissions shall also be considered as written notice.

ARTICLE 2. THE WORK.

2.01 The Contractor shall perform all of the Work required by the Contract Documents and shall provide materials, supplies, tools, equipment, labor and services directly related to the Work, and shall perform the Work in a good and workmanlike manner with sufficient manpower to perform the Work in accordance with the time requirements set forth in the Contract Documents, and shall perform all other acts and supply all other things necessary to complete the Work in strict accordance with the Contract Documents.

2.02 When completed the Work shall conform to the requirements of the Contract Documents and be completely ready for occupancy and finally completed.

2.03 The Contractor represents and warrants to the Owner that:

2.03.01 It is financially solvent and has sufficient working capital to perform the obligations under this Construction Contract;

2.03.02 It is experienced and skilled in the construction of the type of project described in the Contract Document;

2.03.03 It is able to provide the labor, materials, equipment, and machinery necessary to complete the Work for the agreed-upon price;

2.03.04 It is fully licensed under all applicable laws and authorized to do business in the State of Florida in the name of the entity identified as the "Contractor" in the Construction Contract, and is legally permitted to perform all the work set forth in this Construction Contract.

2.03.05 It has visited the jobsite and examined its nature and location, including without limitation: the surface conditions of the site and any structure or obstruction both natural or man-made; the surface water conditions and water ways of the site and surrounding area; the subsurface conditions of the land as disclosed by soil test borings; and the location of electric and utility lines and water, sanitary, sewer and storm drain lines, as well as site ingress and egress. The Contractor acknowledges receipt and has reviewed the site geotechnical report provided for the Owner.

2.03.06 It will comply with all federal, state, and local governmental laws, rules, and regulations relating to its responsibilities as set forth in the Contract Documents.

ARTICLE 3. COORDINATION AND CORRELATION OF DRAWINGS AND SPECIFICATIONS.

3.01 The Contractor represents that:

3.01.01 The Contractor and Subcontractors have fully examined and compared all Drawings, Specifications and other Contract Documents including but not limited to those relating to the architectural, structural, mechanical, electrical, civil engineering and plumbing elements and have compared and reviewed all general and specific details on the Drawings and the various technical and administrative requirements of the Specifications.

3.01.02 All construction materials, labor, methods, means, techniques, sequences and procedures required to carry out the Work, all safety precautions and programs required in connection with carrying out the Work, all conflicts, discrepancies, errors and omissions that Contractor is aware of as a result of the examination and comparison of the Contract Documents have been either corrected or clarified to the satisfaction of the Contractor prior to execution of this Construction Contract.

3.01.03 The Contract Sum is reasonable compensation and represents the total lump sum cost for the Work and that all systems and Work shall be functional and in accordance with the requirements of the Contract Documents.

3.01.04 The Contract Time is adequate for the performance of the Work.

3.02 The Contractor is responsible for all means, methods, techniques, and sequencing of construction.

3.03 If, after execution of this Construction Contract, the Contractor detects a conflict, discrepancy, error or omission in the Contract Documents then it shall immediately notify Project Consultant and Owner prior to proceeding with the specific portion of the Work.

ARTICLE 4. INTENT AND INTERPRETATION.

4.01 With respect to the intent and interpretation of this Contract, the Owner and the Contractor agree as follows:

4.01.01 The Contractor shall have a continuing duty to read, examine, review, compare and contrast each of the documents which make up this Contract and shall immediately give written notice to the Owner and the Project Consultant of any conflict, ambiguity, error or omission which the Contractor may find with respect to these documents before proceeding with the affected Work.

4.01.02 The Contract Documents are complementary, and what is called for by one shall be as binding as if called for by all.

4.01.03 The intent of the Contract Documents is to include all labor, materials, equipment, services, and transportation necessary for the proper execution of the Work. The Contractor shall continually refer to drawing, specifications and other Contract Documents in this regard.

4.01.04 In the event of a conflict among the Contract Documents, the most stringent requirement to the Contractor shall control.

4.02 The Project Consultant shall be the initial interpreter of the requirements of the Contract Documents and the judge of the performance thereunder.

4.02.01 The Project Consultant shall render interpretations necessary for the proper execution or progress of the Work with reasonable promptness on written request of either the Owner or the Contractor, and shall render written decisions, within a reasonable time, on all claims, disputes, change order requests, substitution requests, requests for interpretation and other matters in question between the Owner and the Contractor relating to the execution or progress of the Work or the interpretation of the Contract Documents.

4.02.02 Interpretations and decisions of the Project Consultant shall be consistent with the intent of and reasonably inferable from the Contract Documents.

4.02.03 In the capacity of interpreter, the Project Consultant shall endeavor to secure faithful performance by both the Owner and the Contractor, and shall not show partiality to either.

ARTICLE 5. OWNERSHIP OF THE CONTRACT DOCUMENTS WHICH MAKE UP THE CONTRACT

5.01 Subject to any rights the Project Consultant may have, the Contract Documents and each of them, as well as any other documents, intellectual property, software, computer-assisted material or disks relating to or regarding the Work, shall be and remain the property of the Owner. This shall be the case even if prepared, created or provided by the Project Consultant, Contractor, Subcontractor or others.

5.02 The Contractor shall have the right to keep copies of the same upon completion of the Work; provided, however, that in no event shall the Contractor use, or permit to be used, any portion or all of the same on other projects without the Owner's prior written authorization.

5.03 The Contractor agrees to provide any and all items referred to in this Paragraph to Owner upon demand by Owner. In the event Contractor fails to provide the same to the Owner as demanded, Contractor acknowledges that the Owner will need the same and will be irreparably harmed and be subject to an injunction to provide the same.

ARTICLE 6. TEMPORARY UTILITIES.

6.01 Water For Execution of the Work: The Contractor shall provide temporary water lines sufficient to supply all water needed for the construction and other services required by the Contract Documents and shall pay for all service connections and water used by the Contractor or Subcontractors unless the contrary is provided for elsewhere in the Contract Documents.

6.02 Electrical Energy: The Contractor shall provide temporary electrical energy and power lines sufficient to supply all electricity needed for the construction and other services required by the Contract Documents and shall pay for all service connections and electricity used by the Contractor or Subcontractors unless the contrary is provided for elsewhere in the Contract Documents.

6.03 Temporary Sanitary Facilities and Sewers:

6.03.01 The Contractor shall provide and maintain in a neat and sanitary condition such accommodations and facilities for the use of his employees as may be necessary to comply with the regulations of any governmental agencies, departments, etc., which address or govern these issues.

6.03.02 No nuisance will be permitted.

6.03.03 Upon completion of Work, such facilities shall be removed and the premises left in a sanitary condition.

6.03.04 Contractor is not permitted to use restrooms or other sanitary facilities within the Owner's existing building or on-site facilities unless the contrary is provided for elsewhere in the Contract Documents.

ARTICLE 7. PROGRESS.

7.01 Contractor shall provide the Owner with full information in advance as to its plans for performing each part of the Work. This shall include, but not be limited to, schedules provided to the Owner as Post-Award Information and subsequently updated schedules submitted to the Owner on a monthly basis as required in Article 10 below, as a condition precedent to payment(s).

7.01.01 Such schedule shall be in a form acceptable to the Owner.

7.01.02 The Contractor's schedule shall be updated no less frequently than monthly (unless the parties otherwise agree in writing) and shall be updated to reflect conditions encountered from time to time and shall apply to the total Project.

7.01.03 Each such revision shall be provided to the Owner and the Project Consultant.

7.01.04 Compliance with the requirements of this Subparagraph shall be a condition precedent to payment to the Contractor, and failure by the Contractor to comply with said requirements shall constitute a material breach of this Contract.

7.01.05 By providing these Schedules to Owner, Owner does not in any way acknowledge or consent that the Schedules are acceptable or reasonable, but it is simply reviewing same for its own informational purposes.

7.02 If at any time during the progress of Work, the Contractor's actual progress is inadequate to meet the requirements of the Contract Documents, such as the required completion dates, the Owner may so notify Contractor who shall thereupon take such steps as may be necessary to improve its progress so as to complete the Work on or before the required Substantial Completion Date.

7.02.01 If within a reasonable period as determined by Owner, the Contractor does not improve performance to meet the requirements of the Contract Documents, such as the required completion dates, then the Owner may require an increase in any or all of the following: Contractor's Subcontractor crews and Contractor's own labor force, the number of shifts, overtime operation, Contractor's supervision and additional days of work per week, all without cost to Owner.

7.02.02 Neither such notice by Owner nor Owner's failure to issue such notice shall relieve Contractor of its obligation to achieve the quality of work and rate of progress required by the Contract Documents.

7.03 Failure of Contractor to comply with the instructions of the Owner may be grounds for determination by Owner that Contractor is not prosecuting its Work with such diligence as will assure completion within the time specified.

7.04 Upon such determination, Owner, in addition to any and all other rights set forth in the Contract Documents and remedies afforded Owner under the Contract Documents or at law, may:

7.04.01 Elect to proceed with the Work with its own employees, agents, contractors, subcontractors, suppliers and assess all costs, expenses or fees for same against contractors and/or

7.04.02 Terminate for cause Contractor's right to proceed with the performance pursuant to the Contract Documents, or any separable part thereof, in accordance with the applicable provisions of the Contract Documents.

ARTICLE 8. EXPEDITING

8.01 The Work, equipment and material provided under this Contract may be subject to expediting by Owner.

8.02 Owner shall be allowed reasonable access to the shops, factories and other places of business of the Contractor and/or Subcontractors for expediting purposes.

8.03 As required by Owner, Contractor shall supply schedules and progress reports for Owner's use in expediting, and Contractor shall cooperate with Owner and require Subcontractors to cooperate with Owner in such expediting.

8.04 Any expediting performance by Owner shall not relieve Contractor of its sole and primary responsibility for timeliness of delivery of the equipment and material to be provided under the Contract Document.

ARTICLE 9. COMPLETION

9.01 When the Contractor considers that the Work, or a portion thereof which the Owner agrees to accept separately, is substantially complete, the Contractor shall prepare and submit to the Project Consultant a comprehensive Punch List of items to be completed or corrected prior to final payment. Failure to include an item on the Punch List does not alter the responsibility of the Contractor to complete all Work in accordance with the Contract Documents.

9.01.01 For a Project with an estimated cost of less than million, the Punch List shall be completed within thirty (30) calendar days after Substantial Completion of the Project, as same is defined in the Contract Documents. If Substantial Completion is not defined in the Contract Documents, the list shall be completed upon reaching beneficial occupancy or use.

9.01.02 For a Project with an estimated cost of one million or more, the Punch List shall be completed within thirty (30) calendar days, unless otherwise extended elsewhere in the Contract Documents, but not to exceed sixty (60) calendar days, after reaching Substantial Completion, as the same is defined in the Contract Documents. If Substantial Completion is not defined in the Contract Documents, the list shall be completed upon reaching beneficial occupancy or use.

9.02 For a Project involving the construction of more than one building or structure, or involving a multiphase project, a Punch List shall be created for each building, structure, or phase of the Project pursuant to the limitations provided for above in 9.01.01 and 9.01.02, as applicable.

9.03 The failure to include any corrective work or pending items not yet completed on the List does not alter the responsibility of the Contractor to complete all the construction services purchased pursuant to the contract. All items that require correction under the Contract Documents and that are identified after the preparation and delivery of the Punch List remain the obligation of the Contractor as defined by the Contract Documents.

9.04 Upon completion of all of the items on the Punch List, the Contractor may submit a payment request for all remaining retainage withheld by the local governmental entity pursuant to this section. If a good-faith dispute exists as to whether one or more items identified on the list have been completed pursuant to the Contract Documents, the Owner may continue to withhold an amount not to exceed 150 percent of the total costs to complete the outstanding item.

9.05 In the event that the Contractor fails, in whole or in part, to comply with the obligations and responsibilities required hereunder in paragraph 9.01, the Owner need not pay or process any payment request for remaining retainage.

ARTICLE 10. CONTRACT PAYMENTS

10.01 Schedule of Values:

10.01.01 The Contractor shall maintain and update the Schedule of Values originally provided to the Owner as Post-Award Information.

10.01.02 The Contractor's Schedule of Values apportions the Contract Price among the different elements of the required Work for purposes of periodic and final payments and shall be submitted as detail in support of the Contractor's monthly Application for Payment.

10.01.03 The Schedule of values shall be presented with such detail, and supported with whatever information the Project Consultant or the Owner reasonably requests.

10.01.04 The Contractor shall not imbalance its Schedule of Values nor artificially inflate or exaggerate any element thereof. Contractor's failure to comply with this provision shall be grounds for Owner to terminate Contractor, as provided for elsewhere herein.

10.02 The Owner shall pay the Contract Price to the Contractor in accordance with the procedures provided herein.

10.02.01 On or before the **15th** day of each month after commencement of performance, but no more frequently than once monthly, the Contractor may submit an Application for Payment to the Owner for the period ending the last day of the previous month or other pay period as mutually defined and agreed to by the Contractor and Owner and as provided for in the Contract Documents. The Contractor shall also deliver a copy of the Application for Payment to the Project Consultant.

10.02.02 Said Application for Payment shall be in the format required elsewhere in the Contract Documents and include whatever supporting information as may be required by the Project Consultant, the Owner, or both.

10.02.03 The Owner shall not be required to pay for stored materials or equipment except as set forth in Article 25 below.

10.02.04 Each Application for Payment shall be signed by the Contractor and shall constitute the Contractor's representation that the quantity of work has reached the level for which payment is requested, that the Work has been properly installed or performed in substantial compliance with the requirements of the Contract Documents, and that the Contractor knows of no reason why payment should not be made as requested.

10.02.05 Upon receipt of the Application for Payment, the Project Consultant shall:

a. Within ten (10) days, review the Application for Payment and may also review the Work at the Project site or elsewhere to determine whether the quantity and quality of the Work is as represented in the Application for Payment and is as required by the Contract Documents.

b. Approve in writing the amount which, in the opinion of the Project Consultant, is properly owing to the Contractor.

10.02.06 The Owner shall make payment to the Contractor within fifteen (15) days following the Project Consultant's written approval of the Application for Payment but in no event later than twenty-five (25) days after the invoice was received by the Owner.

10.02.07 The Owner may reject the Application for Payment within twenty (20) business days after the date on which the Application for Payment is stamped as received. The rejection shall be in writing and shall specify the deficiency in the payment request or invoice and the action necessary to make the payment request or invoice proper.

10.02.08 If the Owner disputes a portion of an Application for Payment, the undisputed portion must be timely paid.

10.02.09 The Contractor may submit a corrected Application for Payment that corrects the deficiency or deficiencies specified in writing by the Owner. The Owner shall either pay or reject the corrected Application for Payment within ten (10) business days after receipt of same.

10.02.10 If a dispute regarding the Application for Payment cannot be resolved pursuant to the process outlined herein, it must be resolved in accordance with the dispute resolution procedures outlined in Article 45.

10.02.11 The amount of each monthly payment shall be the amount approved for payment by the Project Consultant less such amounts, if any, otherwise owing by the Contractor to the Owner or which the Owner shall have the right to withhold as authorized by the Contract Documents or reasonable business practices. In the event of a dispute with regard to a portion of the Application for Payment, the Owner shall pay the undisputed portion pursuant to the timeline established in this Section.

10.02.12 The Project Consultant's approval of the Contractor's Applications for Payment shall not preclude the Owner from the exercise of any of its rights as set forth in the Contract Documents.

10.02.13 The submission by the Contractor of an Application for Payment also constitutes an affirmative representation and warranty that all Work for which the Owner has previously paid is free and clear of any lien, claim, or other encumbrance by any person whatsoever.

10.02.14 As a condition precedent to payment, the Contractor shall, as required elsewhere in the Contract Documents and as required by the Owner, also provide to the Owner documents relating to the Project, including but not limited to, updated schedules and daily logs, properly executed documents that all subcontractors, materialmen, suppliers or others having rights, acknowledge receipt of all sums due pursuant to all prior Payment Requests and waive and relinquish any rights or other claims of any nature relating to the Project.

10.02.15 Furthermore, the Contractor warrants and represents that, upon payment of the Application for Payment submitted, title to all work included in such payment shall be vested in the Owner.

10.02.16 Dollar Value/Time Graphs: Each of the Contractor's Application for Payment shall be accompanied by a graph, prepared by the Contractor, that consecutively tracks the percentage of completion of both the Application for Payment's dollar value attained and the contract time (calendar days) elapsed, all coinciding with the date of the Application for Payment.

10.03 When payment is received from the Owner, the Contractor shall, within five (5) days, pay all subcontractors, materialmen, laborers, and suppliers the amounts they are due for all work covered by such payment. In the event such payments are not made in a timely manner, the Owner may, in its discretion, invoke reasonable procedures in order to protect the Owner's interest or the Owner's desire to assist in having subcontractors, laborers, suppliers, materialmen, or others paid.

10.04 It is mutually agreed that payments made under this Contract shall not constitute acceptance of defective or improper materials or workmanship nor shall same act as a waiver or release of future performance in accordance with the Contract Documents.

ARTICLE 11. WITHHOLDING PAYMENT TO CONTRACTOR

11.01 The Owner may withhold as retainage five (5) percent of the payment owed to the Contractor until completion of the Project.

11.02 If the City pays the retainage amount upon the Contractor's request, which is attributable to the labor, services, or materials supplied by one or more contractors or suppliers, the Contractor shall timely remit payment of such retainage to those subcontractors or suppliers.

11.03 Regardless of the provisions in this Article, in no event shall the Owner be required to pay or release any amounts that are the subject of a good faith dispute, a claim brought pursuant to Fla. Stat. § 255.05, or otherwise the subject of a claim or demand by the Owner.

11.04 In addition to the Retainage, payments, including but not limited to Final Payment, may be withheld or reduced by the Owner in its sole discretion if any of the following exists:

11.04.01 The Work is not proceeding in accordance with the Construction Documents Schedule as anticipated by the Project Consultant or the Owner. In that event, the Project Consultant or the Owner will assess the

anticipated delay, and the Owner will use the amounts specified for Liquidated Damages as the basis for amounts withheld. Said funds shall be held until such time as the Project Consultant or Owner determines that the Work is back on schedule. By making said funds available to Contractor, Owner does not waive its right to assess liquidated damages at the completion of the Project;

11.04.02 Liquidated Damages as set forth in this Contract;

11.04.03 Defective Work unremedied;

11.04.04 Punch-List items unremedied;

11.04.05 Subject to Owner's written notice to Contractor in accordance with the Contract Documents back charge items for work performed by Owner or another contractor at the request of Owner, which work is within the scope of the Work under this Construction Contract;

11.04.06 Claims filed by subcontractors, laborers, suppliers, materialmen or others;

11.04.07 Failure to comply with any and all insurance requirements;

11.04.08 Failure of the Contractor to make payment properly to Subcontractors or others;

11.04.09 Damage to the Owner or another contractor;

11.04.10 Reasonable evidence that the Work will not be completed on or before the Substantial Completion or Final Completion Date;

11.04.11 Failure of the Contractor to carry out any of its obligations in accordance with the Contract Documents;

11.04.12 Failure of the Contractor to submit the information or documents required by this Contract or reasonably required by Owner, including but not limited to schedules and daily logs.

ARTICLE 12. CONTRACTOR'S RIGHT UPON NONPAYMENT.

12.01 If within thirty (30) days of the date payment to the Contractor is due, the Owner, without cause or basis hereunder, fails to pay the Contractor any amounts then due and payable to the Contractor, the Contractor shall have the right to cease work until receipt of proper payment after first providing ten (10) days written notice of its intent to cease work to the Owner.

ARTICLE 13. INFORMATION AND MATERIAL SUPPLIED BY THE OWNER.

13.01 The Owner shall furnish to the Contractor, prior to the execution of the Contract, any and all written and tangible material, including but not limited to surveys and other information concerning existing conditions on the Site.

13.02 The Owner shall also furnish, if appropriate, the legal description of the Project site, and any required survey.

ARTICLE 14. LICENSES AND PERMITS.

14.01 All licenses and permits necessary to commence and prosecute the Work to completion shall be procured and paid for by the Contractor, unless expressly provided for elsewhere in the Contract Documents.

14.03 All easements and rights-of-way will be procured and paid for by the Owner unless otherwise specifically provided within the Contract Documents.

ARTICLE 15. CEASE AND DESIST ORDER.

15.01 In the event the Contractor fails or refuses to perform the Work as required herein, the Owner may instruct the Contractor to cease and desist from performing the Work in whole or in part. Upon receipt of such instruction,

the Contractor shall immediately cease and desist as instructed by the Owner and shall not proceed further until the cause for the Owner's instructions has been corrected and the Owner instructs that the Work may resume.

15.02 In the event the Owner issues such instruction to cease and desist, and in the further event the Contractor fails and refuses within seven (7) days of receipt of same to provide adequate assurance to the Owner that the cause of such instructions will be eliminated or corrected, then the Owner shall have the right, but not the obligation, to carry out the Work with its own forces, or with the forces of another contractor, and the Contractor shall be fully responsible and liable for the costs of performing such work by the Owner.

15.03 The rights set forth herein are in addition to, and without prejudice to, any other rights or remedies the Owner may have against the Contractor.

ARTICLE 16. DUTIES, OBLIGATIONS AND RESPONSIBILITIES OF THE CONTRACTOR.

16.01 The Contractor shall perform the Work in accordance with the Contract Documents.

16.02 The Contractor shall supervise the Work and bear full responsibility for any and all acts or omissions of those engaged in the Work on behalf of the Contractor.

16.03 The Contractor hereby warrants that all labor provided under this Contract shall be competent to perform the tasks undertaken, that the product of such labor shall yield only first-class results, that all material and equipment provided shall be new and of high quality, that the Work will be complete, of high quality, without defects, and in compliance with the requirements of the Contract Documents. Any Work not complying with the requirements of this Subparagraph shall constitute a breach of the Contractor's warranty.

16.04 Unless expressly provided for elsewhere in the Contract Documents, the Contractor shall obtain and pay for all required permits, fees, and licenses and shall comply with all legal requirements applicable to the Work.

16.05 The Contractor shall prepare and submit schedules and supporting documentation as required elsewhere in the Contract Documents.

16.06 Record Keeping on Site:

16.06.01 The Contractor shall keep a daily log, an updated copy of the Contract Documents, approved shop drawings and other submittals, and other documents and materials as required by the Contract Documents at the site.

16.06.02 All of these items shall be available to the Owner and the Project Consultant at all regular business hours.

16.06.03 Upon final completion of the Work, all of these items shall be finally updated and provided to the Owner and shall become the property of the Owner.

16.07 Shop Drawings And Other Submittals:

16.07.01 The Contractor shall submit for approval with reasonable promptness and in a timely manner so as to cause no delay in the Work, various submittals including shop drawings as required for the Work of the various trades.

16.07.02 These shop drawings and other submittals shall be in accordance with the requirements of the Contract Documents and shall be carefully checked in every respect and signed by the Contractor before submitting same to the Project Consultant.

16.07.03 Shop drawings and other submittals from the Contractor are not part of the Contract Documents but are documents prepared and utilized by the Contractor to coordinate the Work.

16.07.04 The Contractor shall not do any Work requiring shop drawings or other submittals unless such have been approved in writing by the Project Consultant.

16.07.05 All Work requiring approved shop drawings or other submittals shall be done in compliance with such approved documents. However, approval by the Project Consultant or the Owner shall not be evidence that Work installed pursuant thereto conforms with the requirements of the Contract Documents.

16.07.06 The Owner and the Project Consultant shall have no duty to review partial submittal or incomplete submittal except as may be provided otherwise within the Contract Documents.

16.07.07 The Contractor shall maintain a submittal log which shall include, at a minimum, the date of each submittal, the date of any resubmittal, the date of any approval or rejection, and the reason for any approval or rejection.

16.07.08 The Contractor shall have the duty to carefully review, inspect, and examine any and all submittals and resubmittals before submission of same to the Owner or the Project Consultant.

16.08 The Contractor shall maintain the Project site in a reasonably clean condition during performance of the Work. Upon final completion, the Contractor shall thoroughly clean the Project site of debris, trash and excess materials or equipment. In the event the Project is located at or near occupied facilities, then the Owner may establish additional rules and regulations regarding conditions at the Project, including but not limited to, keeping the Project and the occupied premises clean, safe, and secure.

16.09 At all times, the Contractor shall permit the Owner and the Project Consultant to enter upon the Project site and to review or inspect the Work.

ARTICLE 17. SUBCONTRACTS.

17.01 The Contract Documents make no attempt to fix the scope of the Work of any Subcontractor nor the responsibilities of any such Subcontractor, it being understood that the Contractor shall fix the scope of all Work and responsibilities of the Subcontractor. Contractor shall not replace Subcontractor without good cause.

17.02 The Contractor shall continuously update information concerning Subcontractors submitted to the Owner as Post-Award Information by submitting:

17.02.01 The general form of Subcontract Agreement used by the Contractor within thirty (30) days of execution of the Construction Contract.

17.02.02 Updated listings of Subcontractors denoting changes to the list submitted as Post-Award Information within ten (10) days of said change.

17.02.03 Copies of executed Subcontractor Contracts within ten (10) days of their execution.

17.02.04 A complete accounting of all payments made to Subcontractors and the balances owed to the Subcontractors with each Application For Payment submitted by the Contractor.

17.03 All contracts with Subcontractors shall incorporate by reference the terms and conditions of this Construction Contract.

17.04 The Contractor shall cause and require to be included in all Subcontracts a provision for the benefit of the Owner binding the Subcontractors to remain bound by the Subcontracts in the event the Contractor is replaced by another contractor pursuant to the terms of the Contract Documents. The Contractor shall also include in all Subcontracts a provision requiring the Subcontractor, in the event of the Contractor's termination, to consent to the assignment of their Subcontracts to the Owner.

17.05 The Owner may at any time request from the Subcontractors, or any of them, a sworn statement of account with the Contractor and the Contractor shall cause to be included in all Subcontracts a requirement that the Subcontractors provide said sworn statement upon Owner's request.

17.06 Each Subcontractor and supplier must agree to assign all of its warranties to Owner. In addition, each Subcontractor and supplier must warrant all of its Work, equipment, materials, and labor to the Owner in accordance with the terms and provisions of its contractual obligations to the Contractor and any legal or statutory provisions that apply to its work, materials, or equipment.

17.07 Owner may, at its discretion, require Contractor to have major sub-subcontractors or suppliers comply with the requirements of this Article 16 or other provisions of the Contract Documents.

ARTICLE 18. CONTRACTOR'S SUPERINTENDENT

18.01 Before starting the Work, the Contractor shall designate an English-speaking, competent, authorized representative (hereinafter Superintendent), acceptable to the Owner, to represent and act for the Contractor. The Contractor shall:

18.01.01 Inform Owner, in writing, of the name and address of such representative together with a clear definition of the scope of his authority to represent and act for Contractor, and shall specify any and all limitations on such authority.

18.01.02 Keep the Owner informed of any subsequent changes in the foregoing.

18.02 The Superintendent shall be present (or be temporarily represented by a person familiar with the project work activities and schedule) at the site of the Work at all times when the Work is actually in progress.

18.04 All notices, determinations, instructions, and other communications given to the Contractor's Superintendent shall be binding upon the Contractor.

18.05 The Superintendent shall maintain a daily log/report which shall include at least the following information: weather conditions; trades at site; manpower totals by trade; heavy equipment in use; activities in progress; and inspections at site. Copies of the daily entries shall be provided to the Owner once per month, or as required elsewhere in the Contract Documents.

ARTICLE 19. COOPERATION WITH OTHERS.

19.01 The Owner and other contractors and subcontractors may be working at the site during the performance of the Construction Contract, and Contractor's work may be interfered with as a result of such concurrent activities. Contractor shall fully cooperate with Owner and other contractors to avoid any delay or hindrance of the Work. Owner may require that certain facilities be used concurrently by Contractor and other parties and Contractor shall comply with such requirements.

19.02 If any part of the Contractor's work depends on proper execution or results from any work performed by the Owner or any separate contractor, the Contractor shall, prior to proceeding with the Work, promptly report to the Owner any apparent discrepancies or defects in such work that render it unsuitable for such proper execution and results. Failure of the Contractor to so report shall constitute an acceptance of the Owner or separate contractor's work as fit and proper to receive Contractor's Work, except as to defects which may subsequently become apparent in such work performed by others.

ARTICLE 20. SITE CONDITIONS.

20.01 Contractor shall have the sole responsibility to conduct reasonable inspection of the site and to satisfy itself concerning the nature and location of the Work and the general and local conditions, and particularly, but without limitation, with respect to the following: those affecting transportation, access, disposal, handling and storage of material; availability and quality of labor, water and electric power; availability and condition of roads; climatic conditions; location of underground utilities as depicted in the Contract Documents; governmental processes and requirements for obtaining permits other than issuance of the original building permits, certificates of occupancy and other regulatory/utility approvals; physical conditions at the work sites and the Project area as a whole; topography and ground surface conditions; subsurface geology, and nature and quality of surface and subsurface materials to be encountered; equipment and facilities needed preliminary to

and during performance of the Construction Contract; and all other matter which can in any way affect performance of the Construction Contract, or the cost associated with such performance.

20.02 The failure of Contractor to acquaint itself with any applicable condition will not relieve it from the responsibility for properly estimating either the duration, difficulties, or the costs of successfully performing the Work.

20.03 Contractor may reasonably rely upon site documentation provided by the Owner. In the event that during the course of the Work Contractor encounters an underground utility facility that was not shown on the Contract Documents; or subsurface or concealed conditions at the Project site which differ materially from those shown on the Contract Documents and from those ordinarily encountered and generally recognized as inherent in work of the character called for in the Contract Documents; or unknown physical conditions of the Project site, of an unusual nature, which differ materially from that ordinarily encountered and generally recognized as inherent in work of the character called for in the Contract Documents, Contractor, without disturbing the conditions and before performing any work affected by such conditions, shall, within forty-eight (48) hours of their discovery, notify Owner and Project Consultant in writing of the existence of the aforesaid conditions. Project Consultant and Owner shall, within two (2) business days after receipt of Contractor's written notice, investigate the site conditions identified by Contractor. If, in the sole opinion of Project Consultant, the conditions do materially so differ and cause an increase or decrease in Contractor's cost of, or the time required for, the performance of any part of the Work, whether or not changed as a result of the conditions, Project Consultant shall recommend an equitable adjustment to the Contract Price, or the Contract Time, or both. If Owner and Contractor cannot agree on an adjustment in the Contract price or the Contract time, the adjustment shall be referred to the Project Consultant for determination. Should Project Consultant determine that the conditions of the Project site are not materially different to justify a change in the terms of the Contract, Project Consultant shall so notify Owner and Contractor in writing, stating the reasons, and such determination shall be final and binding upon the parties hereto. No request by Contractor for an equitable adjustment to the Contract under this provision shall be allowed unless Contractor has given written notice in strict accordance with the provisions of this Article. No request for an equitable adjustment or change to the Contract Price or Contract Time for differing site conditions shall be allowed if made after the date certified by the Project Consultant as the date of substantial completion.

ARTICLE 21. RESPONSIBILITY FOR WORK SECURITY.

21.01 Contractor shall at all times conduct, at its expense, all operations under the Construction Contract in a manner to avoid the risk of loss, theft, or damage by vandalism, sabotage, or other means to any property.

21.01.01 Contractor shall promptly take such reasonable precautions as are necessary and adequate against any conditions that involve a risk of loss, theft, or damage to its property.

21.01.02 Contractor shall continuously inspect all of its Work, materials, equipment and facilities to discover and determine any such conditions and shall be solely responsible for discovery, determination and correction of any such condition.

21.02 Contractor shall comply with all applicable laws and regulations.

21.02.01 Contractor shall cooperate with Owner on all security matters as set forth elsewhere in the Contract Documents and shall promptly comply with any project security requirements established by Owner.

21.02.02 These security requirements may be more stringent in the event portions of the facilities or project are occupied or otherwise being used.

21.02.03 Such compliance with these security requirements shall not relieve Contractor of its responsibility for maintaining property security for the above noted items, nor shall it be constructed as limiting in any manner Contractor's obligation to undertake reasonable action as required to establish and maintain secure conditions at the site.

21.03 Contractor shall prepare and maintain accurate reports of incidents of loss, theft or vandalism and shall provide these reports to Owner in a timely manner.

ARTICLE 22. PROTECTION OF WORK IN PROGRESS, MATERIALS, AND EQUIPMENT.

22.01 Contractor shall be responsible for and shall bear any and all risks of loss or damage to Work in progress, all materials delivered to the site, and all materials and equipment involved in the Work until completion and final acceptance of the Work under this Contract.

22.02 Permanent openings for the introduction of work and materials to the structure and construction site shall be protected so that upon completion, the Work will be delivered to the Owner in proper, whole, and unblemished condition.

ARTICLE 23. ADMINISTRATION OF THE CONTRACT.

23.01 The Project Consultant will provide Administration of the Contract.

23.01.01 For those projects for which the City Engineer serves as the Project Consultant, all references to the Project Consultant shall be considered to be the City Engineer.

23.01.02 In the event the Owner should find it necessary to replace the Project Consultant, the Owner shall retain a replacement, and the role of the replacement shall be the same as the role of the original Project Consultant.

23.02 Unless otherwise directed by the Owner in writing, the Project Consultant will perform those duties and discharge those responsibilities allocated to the Project Consultant by the Owner.

23.03 Neither the Project Consultant nor the Owner will be responsible for construction means, methods, techniques, sequences or procedures, safety precautions and programs in connection with the Work or for the acts of omission or commission of the Contractor, its Subcontractors or their agents or employees.

23.04 The Project Consultant and Owner will each have the authority to reject Work which does not conform to the Contract Documents and to require special inspection or testing with prior approval by the Owner. Neither the Project Consultant's nor the Owner's authority to act under this Paragraph, nor any decision made by them in good faith either to exercise or not to exercise such authority, shall give rise to any duty or responsibility of the Project Consultant or the Owner to the Contractor, any Subcontractor, any of their agents or employees, or any other person performing any of the Work.

23.05 The Contractor shall forward all communications to the Project Consultant, with simultaneous copies to the Owner.

23.06 The Project Consultant will review and certify the Contractor's Application for Payments, which the Owner must subsequently approve prior to Payment of the Contractor.

23.07 The Project Consultant shall approve shop drawings for design only, the Contractor being responsible for all dimensions, quantities, etc., necessary to complete the Work in compliance with the Drawings and Specifications and other Contract Documents.

23.08 The duties, responsibilities, and limitations of authority of the Project Consultant and the Owner will not be modified nor extended without the written consent of the Contractor, the Project Consultant, and the Owner.

23.09 Notwithstanding anything to the Contrary in these General Conditions or any other "Contract Document" as that term is defined in the Professional Services Agreement between the City of Pompano Beach, Florida and the Project Consultant, it is not the intention nor shall any of the provisions of those documents act as a release, limitation or discharge of the obligations or responsibilities of the Project Consultant pursuant to its agreement with the Owner.

23.10 The Project Consultant will utilize the Contractor Performance Report to monitor and record the Contractor's performance for the work specified by the contract. The Contractor Performance Report has been included as an exhibit to the contract.

ARTICLE 24. MATERIALS.

24.01 The Contractor shall provide materials and equipment as required in the Contract Documents. No substitution will be permitted except in the instance where a material is no longer available during the progress of the Work or is deemed by the Owner to be no longer suitable or appropriate for incorporation into the Work or for obvious economic benefits accruable to the Owner.

24.01.01 Any such substitution must be approved by the Project Consultant and Owner prior to incorporation of the proposed substitution into the Work.

24.01.02 Proposed substitutions must be submitted for consideration from the Contractor to the Project Consultant and the Owner. Documentation for the proposed substitution must include, but is not limited to, substantiation of the Contractor's efforts to obtain the originally specified materials, including documentary evidence from the original materials' manufacturer that such materials are not available.

24.01.03 Product delivery lead times shall not serve as a basis for any substitution request except where approved in advance by the Owner.

24.01.04 All additional costs incurred by the Owner as the result of any substitution will be the direct responsibility of and borne by the Contractor.

24.02 The Contractor shall make written request to the Project Consultant for and obtain his written approval of the use of any materials proposed for use when "approval" materials are specified or a performance type specification is utilized without mentioning any standard by name.

24.03 If, in the opinion of the Project Consultant, a specified product or equipment no longer meets the quality of the products or equipment required for the Work, Project Consultant shall request a Change Order Proposal from the Contractor for modifying the Contract to incorporate the respective changes to the Work required, the Contract amount, and the Contract Time as beneficial to the Owner.

ARTICLE 25. STORED MATERIALS.

25.01 Contractor shall, at its expense, receive, unload, store in a secure place, and deliver from storage to the construction site all materials and equipment required for the performance of the Contract.

25.01.01 Contractor is not entitled to payment for the same except for those materials which, in the Owner's discretion, are properly stored and are going to be installed or incorporated into the construction of the Project within thirty (30) days of delivery to the construction site.

25.01.02 The storage facilities and methods of storing shall meet Owner's approval and shall be in accordance with manufacturer's recommendations, or Owner will not be obligated to pay for same.

25.01.03 Materials and equipment subject to degradation by outside exposure shall be stored in a weather-tight enclosure provided by the Contractor at its expense.

25.01.04 Owner may, at its discretion, require material to be stored in an air-conditioned location.

25.02 Provided the above conditions are met, the stored materials may be included in a subsequent Application for Payment if the Contractor also complies with the following:

25.02.01 An applicable purchase order is provided listing the materials in detail and identifying the Contract Documents, by name, with verification that the total value of the purchase order amount reconciles with the corresponding application for payment stored materials line item value.

25.02.02 Evidence that proper storage security is provided.

25.02.03 The Owner is provided legal title (free of liens or encumbrances of any kind) to the material that is stored or stockpiled.

25.02.04 The Contractor and/or its Subcontractor have provided insurance for the Stored Materials against loss, damage (from whatever source), or disappearance, including loss or theft prior to incorporation into the Work. By execution of the Contract, Contractor releases Owner from any responsibility for Stored Materials and assumes all liability for and risk of loss or damage, by whatever means, including Owner's alleged negligence, regardless of whether the Owner has paid for said Stored Materials.

25.03 Once any Stored Material is paid for by Owner, it shall not be removed from the designated storage area except for incorporation into the Project or upon subsequent written approval by Owner.

25.04 No Applications for Payment shall be submitted nor payments made based on the value of materials stored at locations other than the Project, unless otherwise approved in writing by the Owner.

25.05 It is further agreed between the parties that the transfer of title and the Owner's payment for any Stored Material pursuant to the Contract Documents shall in no way relieve the Contractor of the responsibility for providing and installing such material in accordance with the requirements of the Contract Documents.

25.06 The Contractor warrants that title to all of the Work or Stored Materials covered by the Application for Payment will pass to the Owner either by incorporation in the Project or upon receipt of payment by the Contractor, whichever occurs first, free and clear of all liens, claims, security, interest or encumbrance; and that none of the Work and none of the Stored Materials covered by the Application for Payments will have been acquired by the Contractor, or by any other person performing the Work at the site or providing materials and equipment to the Project, subject to an agreement under which an interest therein or encumbrance thereon is retained by the seller or otherwise imposed by the Contractor or such person.

25.07 In the event stored materials which Owner is paying for in advance of their being installed or incorporated into the Project pursuant to this Paragraph are not installed or incorporated into the Project within thirty (30) days of when they are delivered to the site, Contractor shall not be entitled to payment for any future stored materials on this Project and the amounts previously approved for payment for said materials shall be deducted from the Contractor's next application for payment..

ARTICLE 26. INSPECTION: REJECTION OF MATERIALS AND WORKMANSHIP.

26.01 All material and equipment provided and work performed shall be properly inspected by Contractor, at its expense, and shall at all times be subject to quality surveillance, inspections, observations, or quality audit by Owner, Project Consultant, and any inspectors conducting an inspection pursuant to code, law, regulations, etc.

26.01.01 Contractor shall provide safe and adequate facilities, and all samples, drawings, lists, and documents necessary for such quality surveillance, observation, or quality audit.

26.01.02 The Contractor shall permit and facilitate inspection of the Work by the Owner, Project Consultant, Inspectors for any governmental agency, authority, or board.

26.01.03 Owner also reserves the right to designate others, such as consultants, commissioning authorities, test and balance agents, forensic specialists, etc., to conduct inspections during or subsequent to the Work as Owner in its discretion desires.

26.01.04 Owner and Project Consultant shall be afforded full and free access to the shops, factories or places of business of Contractor and its Subcontractors for such quality surveillance, observation or quality audit and to determine the status of the Work.

26.01.05 In the event the Project Consultant or Owner requires a factory inspection, the Contractor shall notify the suppliers that the material shall not be produced or fabricated without due notice to the Project Consultant and Owner and an opportunity for such inspection.

26.02 If any Work should be covered up without approval or consent of the Project Consultant or Owner, it must, if required by the Project Consultant or Owner, be uncovered for examination at the Contractor's expense.

26.03 If any material, equipment or workmanship is determined by Owner, City Engineer, Project Consultant or Inspector either during performance of the Work or on final quality surveillance, or during any applicable warranty period, to be defective or not complying with the requirements of this Construction Contract, Owner, City Engineer, Project Consultant or Inspector will notify Contractor in writing that such material, equipment or portions of the Work is rejected and Owner reserves the right to withhold payment on any such item or seek compensation from Contractor for same. Thereupon, Contractor shall, at its own expense, immediately remove, replace, or correct such defective material, equipment, or portions of the Work by making the same comply strictly with all requirements of the Contract Documents. The Contractor shall be responsible for the costs of any additional site observations, special inspections and/or testing, or other activities of either the Project Consultant or the Owner made necessary by the correction of such defective materials, equipment or portions of the Work.

26.04 Neither the failure to make such quality surveillance, observation, or quality audit, nor to discover defective workmanship, materials, or equipment, shall prejudice the rights of the Owner to correct or reject the same as hereinafter provided.

ARTICLE 27. WARRANTY.

27.01 Unless otherwise provided elsewhere in the Contract Documents, all material and equipment incorporated into any Work covered by the Contract Documents shall be new and, where not specified, of the most suitable grade of their respective kinds for their intended use, and all workmanship shall be in accordance with construction practices acceptable to Owner and Project Consultant.

27.02 Unless otherwise provided in the Contract Documents, Contractor warrants all Work, equipment, materials and workmanship to be in accordance with the Contract Documents, any and all applicable codes, proper and workmanlike, first class and free from defects for a period of twelve (12) months (unless longer guarantees or warranties are provided for elsewhere in the Contract Documents in which case the longer periods of time shall prevail) from and after Final Completion of the Work under the Contract Documents, regardless of whether the same were provided or performed by Contractor or by any Subcontractor.

27.03 Contractor’s warranty with respect to latent defects shall be in accordance with Chapter 95, Florida Statutes, and other applicable provisions of State law.

27.04 In the event of damage or injury to persons or property or other consequential or resultant damages resulting from the Contractor's breach of any warranties, then the Contractor will be responsible for the same.

ARTICLE 28. OFFICE SPACE FOR THE OWNER'S PERSONNEL.

28.01 The Contractor shall provide, at the Contractor’s expense, for the duration of the Work, a suitable lockable office for any Owner-designated personnel.

ARTICLE 29. PROJECT RECORD DOCUMENTS AND SURVEY.

29.01 A marked up record set of the Contract Documents and other project records as required elsewhere within the Contract Documents will be kept up to date by the Contractor on the jobsite at all times. These documents will be given to the Project Consultant at the completion of the Work as required by the Contract Documents, and properly labeled as "Project Record Documents."

29.02 In addition to the "Project Record Documents", the Contractor will cause to have prepared by a Surveyor, registered in the State of Florida, a site survey clearly representing all Work done under this Contract and updating the original survey as may have been provided by the Owner.

29.03 The Contractor shall submit Project Record Documents and Survey in the manner and format specified elsewhere in the Contract Documents.

29.04 This is a critical item and final payment will be withheld from the Contractor until "Project Record Documents" and survey are provided by the Contractor and approved by the Project Consultant.

ARTICLE 30. SALVAGE.

30.01 Any salvage resulting from clearing, grubbing, grading, draining, remodeling, or altering any existing facilities on this site shall be the property of the Owner, and this material shall be piled or stacked on the site if the Owner desires this material.

30.02 If this material is not desired by the Owner, it shall be disposed of by the Contractor at his expense.

ARTICLE 31. CLAIMS BY THE CONTRACTOR.

31.01 Although Contractor acknowledges the No Damage for Delay clause set forth in Article 6 of the Agreement between Owner and Contractor, in the event the Contractor is entitled to assert any other claim against Owner for any reason, claims by the Contractor against the Owner (except for claims asserted under Article 20 which are treated as set forth therein), are subject to the following terms and conditions:

31.01.01 All Contractor claims against the Owner shall be initiated by a written claim submitted to the Owner, c/o the City Engineer, and the Project Consultant. Such claim shall be received by the Owner and the Project Consultant no later than fifteen (15) calendar days after the event, or the first appearance of the circumstances causing the claim, and same shall set forth in detail all known facts and circumstances supporting the claim and the actual damages or injuries suffered;

31.01.02 The Contractor shall continue diligently with its performance hereunder regardless of the existence of any claims submitted by the Contractor;

31.01.03 In the event the Contractor seeks to make a claim, as a condition precedent to any such claim the Contractor shall strictly comply with the notice requirements above and such claim shall be made by the Contractor before proceeding to execute any additional or changed Work. Failure of the condition precedent to occur, i.e., providing notice as required in Article 31.01.01 above, shall constitute a complete waiver by the Contractor of any claim for additional compensation or extension of time. This written notice requirement may not be waived by verbal representations or the acts of representatives of the Owner or Project Consultant;

31.01.04 In connection with any claim by the Contractor against the Owner for compensation in excess of the Contract Price, any liability of the Owner for the Contractor's cost shall be strictly limited to direct cost of labor and materials incurred by the Contractor at the jobsite and shall in no event include indirect cost, overhead, loss of profit, or consequential damages of the Contractor. The Owner shall not be liable to the Contractor for claims of third parties, including, but not limited to, subcontractors, suppliers, laborers, etc.

ARTICLE 32. CHANGE ORDERS.

32.01 One or more changes to the Work within the general scope of this Contract may be ordered by the Owner by Change Order, Project Consultant’s Supplementary Instructions, and Construction Change Directives.

32.02 The Contractor shall proceed with any extra Work or changes which alter the Contract by adding to, or deducting from the Contract Sum or Contract Time in strict accordance with the following terms and conditions:

32.02.01 Change Order shall mean a written order to the Contractor executed by the Owner and the Project Consultant after execution of this Contract, directing a change in the Work and may include a change in the Contract Price or the time for the Contractor's performance, or any combination thereof;

32.02.02 Any change in the Contract Price or time resulting from a Change Order shall be determined as follows:

a. By mutual agreement between the Owner and the Contractor as evidenced by (a) the change in the Contract Price or time being set forth in Change Order in accordance with Article 32.02.08 below, and (b) the execution of the Change Order; or,

b. If no mutual agreement occurs between the Owner and the Contractor, the change in the Contract Price, if any, shall be derived based upon the Cost Plus Price basis (as set forth in Article 32.02.08 below) by determining the "total actual costs" (in accordance with Article 32.02.09 below), incurred or savings achieved, resulting from revisions in the Work. Such total actual costs or savings shall include a component for direct jobsite overhead and profit, but under no circumstances shall it include non-job site overhead expenses or costs or any other indirect costs or components. Any such costs or savings shall be documented in the format and with such content and detail as the Owner or the Project Consultant requires. If agreement is not reached as to the change in time, Contractor shall be given a reasonable time based upon the scope of Work required by the change.

32.02.03 The execution of a Change Order by the Contractor shall constitute conclusive evidence of the Contractor's agreement to the ordered changes in the Work and the change in the Contract Price and the time for performance by the Contractor. The Contractor, by executing the Change Order, waives and forever releases any claim against the Owner for additional time or compensation for issues or matters relating to or arising out of or resulting from the Work included within or affected by the executed Change Order.

32.02.04 The Contractor shall notify and obtain the consent and approval of the Contractor's surety with reference to all Change Orders if such notice, consent, or approval is required by the Owner, the Project Consultant, the Contractor's surety, or by law. The Contractor's execution of the Change Order shall constitute the Contractor's warranty to the Owner that the surety has been notified of, and consents to, such Change Order and the surety shall be conclusively deemed to have been notified of such Change Order and to have expressly consented thereto, and that the penal sums of the performance and payment bonds furnished by Contractor and Surety are adjusted coextensively with the amount of the Change Order.

32.02.05 The Owner, without invalidating the Contract, may require the change for any reason whatsoever. All such Work shall be executed under the terms of the original Contract.

32.02.06 All change orders and adjustments shall be in writing and executed by the Contractor and Owner; otherwise, no claim for additional compensation or time will be allowed.

32.02.07 The amount of credit to be allowed by the Contractor to the Owner for a deletion or change which results in a net decrease in the Contract Sum shall be the total actual cost (as set forth in Article 32.02.09 below) saved as confirmed by the Project Consultant. The amount shall not include an amount for the overhead and profit of the Contractor, which the Owner is not required to pay as a result of the deletion or decrease. When both additions and credits covering related Work or substitutions are involved in a change, the overhead and profit shall be calculated on the basis of the net increase, if any, with respect to that change.

32.02.08 The value of any change ordered under the Contract for extra Work and/or any reductions in Work required shall be determined under one or more of the following procedures before a written Change Order is issued.

a. By **UNIT PRICES** named in the Contract or subsequently agreed upon by the Owner and the Contractor, which prices shall include the Contractor's overhead and profit.

b. By **LUMP SUM PRICE** agreed upon actual reasonable costs and direct job site overhead by the Owner and the Contractor, which price shall include Contractor's overhead and profit but under no circumstances shall it include non job site overhead, expenses or costs or any other indirect costs; a breakdown of the estimated costs comprising the lump sum price may be required by the Project Consultant for his review. The percentage for overhead and profit shall be determined in accordance with the method listed for COST PLUS PRICE, subparagraph (c.) below.

c. By a **COST PLUS PRICE** based on total actual costs as defined in Article 32.02.09 below, plus an added percentage, all determined as follows:

OVERHEAD AND PROFIT:

JOB SITE OVERHEAD, including supervision and the furnishing, use and maintenance of small tools and ordinary equipment incidental to and required for the work of subcontractors (whether performed by them or others) shall be considered to be just and fully compensated for, by adding an amount equal to five percent (5%) of the sum of material costs (as defined under Article 34.08.09(a) below) and labor costs (as defined under Article 34.08.09(b) below), and rentals (as defined under Article 32.08.09(c) below). There shall be no compensation for any non-job site overhead, expenses, or costs.

PROFIT may then be added by the subcontractor to the above material costs and labor costs, including the JOB SITE OVERHEAD allowance, at the rate of 10% of the sum of those costs.

JOB SITE OVERHEAD, including general supervision and the furnishing, use and maintenance of small equipment incidental to and required for the Work of the General Contractor (including that of his subcontractors) shall be considered to be just and fully compensated for by adding an amount equal to ten percent (10%) of the sum of material costs (as defined under Article 32.08.09(a) below and labor costs (as defined under Article 32.08.09(b) below) and rentals (as defined under Article 32.08.09(c) below). There shall be no compensation for any non-job site overhead expenses or costs.

PROFIT may then be added by the Contractor to the above material costs and labor costs, including the JOB-SITE OVERHEAD allowance, at the rate of five percent (5%) of the sum of those costs.

d. BOND ALLOWANCE, for maintaining the Performance Bond at 100% of the contract amount, a sum of one percent (1%) of the total cost of the change (including material, labor, overhead, profit, and equipment rentals) shall be allowed on all change orders.

32.02.09 The total actual costs of materials, labor, and equipment rentals may include the following only:

a. Material costs actually recorded by the Contractor and/or subcontractors as they are delivered to the site and as evidenced from originally receipted invoices, listing appropriate quantities and unit prices. Records in proper form shall be maintained and available to the Project Consultant at all times.

b. Labor costs represented by the actual wages paid to all laborers, apprentices, journeymen, and foremen involved in and necessary to completing the particular construction operations, for each day and every hour such labor teams and foremen are actually employed and on the extra Work required, including the net cost of insurance, Social Security and Workmen's Compensation. The furnishing, use and maintenance of small tools and ordinary equipment normal to the work of individual workmen in the trades will be considered part of the labor costs. Records in proper form shall be maintained and available to the Project Consultant at all times.

c. Rentals for special equipment or machinery such as power-driven roller, tractors, trucks, shovels, drills, mixers, pumps, hoists, etc., required for the economic performance of the Work, at reasonable rental prices agreed upon before work commences, shall be allowed the Contractor and/or his subcontractors by the Project Consultant for each and every hour such special equipment is in use on the particular work.

32.02.10 The Contractor is obligated to proceed with the Work for a Change Order, even though there has not been an agreement reached with the Owner as to an adjustment to the Contract Price or time, and even if there is a dispute as to the same. In such instances, the Owner, City Engineer, or Project Consultant will issue a Construction Change Directive to the Contractor providing for the scope of work to be performed and the payment therefore based on 32.02.09 above. A Change Order or proposed Change Order shall not be the basis of the Contractor not performing pursuant to the Contract Documents.

32.02.11 The Contractor, Owner, and Project Consultant shall administer and document the Change Order process by utilizing the documentation specified elsewhere in the Contract Documents, including a Construction Change Directive.

32.03 The Project Consultant will have the authority to order minor changes in the Work not involving an adjustment to the Contract Sum or Contract Time and not inconsistent with the intent of the Contract Documents. Such changes shall be effected by written order of the Project Consultant, and such changes shall be binding on the Owner and the Contractor.

32.04 The Owner has authorized the following approval thresholds for Change Orders in the Name of The City of Pompano Beach, Florida, under its General Services Manual, the rules of which are incorporated below:

A. The City Manager is authorized to approve change orders up to the cumulative total of 10 percent of the original construction contract amount, not to exceed $75,000 in the aggregate.

B. When the cumulative total of all change orders on a project has exceeded the ceiling established in 32.04A above, all subsequent change orders will require prior City Commission approval, except in emergency cases as declared by the City Manager, or where the change order in question would be in the form of a credit, thereby reducing the adjusted contract amount.

C. Approval of change orders under this policy shall be for the purposes of expediting the work in progress and shall be confirmed by City Commission action at the next regular meeting of the City Commission.

ARTICLE 33. DISCOVERING AND CORRECTING DEFECTIVE OR INCOMPLETE WORK.

33.01 In the event that the Contractor covers, conceals or obscures its work in violation of this Contract or in violation of a directive from the Owner or the Project Consultant, such work shall be uncovered and displayed for the Owner's or Project Consultant's inspection upon request, and shall be reworked at no cost in time or money to the Owner.

33.02 If any of the work is covered, concealed, or obscured in a manner not covered by Subparagraph (A) above, it shall, if directed by the Owner or the Project Consultant, be uncovered and displayed for the Owner's or Project Consultant's inspection. If the uncovered work conforms substantially with this Contract, the costs incurred by the Contractor to uncover and subsequently replace such work shall be borne by the Owner; otherwise, such costs shall be borne by the Contractor.

33.03 The Contractor shall, at no additional cost in money to the Owner or extension of time correct work rejected by the Owner or by the Project Consultant as defective or failing to conform to this Contract. Additionally, the Contractor shall reimburse the Owner for all testing, inspections, and other expenses incurred as a result thereof.

33.04 In addition to its warranty obligations set forth elsewhere herein, the contractor shall be specifically obligated to correct any and all defective or nonconforming work for a period of twenty-four (24) months following final completion upon written direction from the Owner.

33.05 The Owner may, but shall in no event be required to, choose to accept defective or nonconforming work.

33.05.01 In such event, the Contract Price shall be reduced, at Owner’s option, by the greater of (i) the reasonable costs of removing and correcting the defective or nonconforming work, or (ii) the difference between the fair market value of the Project as constructed and the fair market value of the Project had it not been constructed in such a manner as to include defective or nonconforming work.

33.05.02 If the remaining portion of the unpaid Contract Price, if any, is insufficient to compensate the Owner for the acceptance of defective or nonconforming work, the Contractor shall, upon written demand from the Owner, pay the owner such remaining compensation for accepting defective or nonconforming work.

ARTICLE 34. SAFETY, PROTECTION OF WORK AND PROPERTY.

34.01 Contractor shall be fully and solely responsible for conducting all operations under this Construction Contract at all times in such a manner as to avoid the risk of bodily harm to persons and damage to property. Contractor

shall continuously and diligently inspect all Work, material, and equipment to discover any conditions which might involve such risks and shall be solely responsible for the discovery and correction of any such conditions.

34.02 Contractor shall instruct its personnel on the requirements of the Contractor's safety program and shall coordinate with other contractors and subcontractors on safety matters.

34.03 Contractor shall provide safety equipment and enforce the use of such equipment by its employees.

34.04 Contractor shall maintain accurate accident and injury reports and shall provide to the Owner a monthly summary of injuries and man-hours lost due to injuries.

34.05 Contractor shall maintain all portions of the Work in a neat, clean, and sanitary condition at all times.

34.06 Contractor shall assure that all Subcontractors shall, without expense to Owner, comply with the foregoing.

34.07 Contractor shall comply with any and all rules, regulations, laws, etc., which apply to safety requirements, including but not limited to OSHA requirements.

34.08 Safety Precautions and Programs:

34.08.01 The Contractor shall be responsible for initiating, maintaining, and supervising all safety precautions and programs in connection with the performance of the Contract.

34.08.02 In the event the Contractor encounters on the site material reasonably believed to be asbestos or polychlorinated biphenyl (PCB) which has not been rendered harmless, the Contractor shall immediately stop Work in the area affected and report the condition to the Owner and Project Consultant in writing. The Work in the affected area shall not thereafter be resumed except by written notice from the Owner. The Work in the affected area shall be resumed in the absence of asbestos or polychlorinated biphenyl (PCB), or when it has been rendered harmless, by written agreement of the Owner, Contractor, and Project Consultant.

34.08.03 The Contractor shall not be required to perform without consent any Work relating to asbestos or polychlorinated biphenyl (PCB).

34.09 Safety of Persons and Property

34.09.01 The Contractor shall take reasonable precautions for the safety of, and shall provide reasonable protection to prevent damage, injury or loss to:

a. Employees on the Work and other persons who may be affected thereby;

b. The Work and materials, and equipment to be incorporated therein, whether in storage on or off the site, under the care, custody or control of the Contractor or the Contractor's Subcontractors or Sub-subcontractors; and

c. Other property at the site or adjacent thereto, such as trees, shrubs, lawns, walks, pavements, roadways, structures, and utilities not designated for removal, relocation, or replacement in the course of construction.

34.09.02 The Contractor shall give notices and comply with applicable laws, ordinances, rules, regulations, and lawful orders of public authorities bearing on the safety of persons or property or their protection from damage, injury, or loss.

a. The Contractor and his Subcontractors shall comply with and conform in all respects to the standard set forth in the Occupational Safety and Health Act (OSHA) of 1970.

b. The Contractor shall prominently post and maintain on the jobsite:

1) OSHA 200: Log and summary of occupational injuries and illnesses.

2) OSHA 2203: Provisions of the Act poster.

34.09.03 The Contractor shall implement and maintain a continuing safety program applicable to all Contractor employees, Subcontractors, and Sub-subcontractors, to include:

a. Designating a responsible member of the Contractor's organization at the site as the Contractor's "Safety Officer," whose duty shall be the prevention of accidents, safety inspections, and accident documentation. This person shall be the Contractor's superintendent unless otherwise designated by the Contractor in writing to the Owner and the Project Consultant.

b. Holding weekly safety meetings with employees and Subcontractors.

c. Implementing OSHA Voluntary Protection Programs.

d. Ensuring the presence of an American Red Cross (or other organization acceptable to the Owner) certified Cardiopulmonary Resuscitation (CPR) and first-aid trained individual on site at all times.

e. Compliance with the Drug Free Workplace Act of 1988, the Federal Omnibus Transportation Employee Testing Act of 1991, and the certification of compliance with the same as required by the Owner in Document 00457, Drug-Free Workplace Certification.

f. Erecting and maintaining reasonable safeguards for safety and protection, including posting danger signs and other warnings against hazards, promulgating safety regulations, and notifying owners and users of adjacent sites and utilities.

g. Ensuring that employees are not discriminated against or discharged for filing reasonable safety or health complaints or for otherwise exercising their rights in these regards.

34.09.04 When the use of hazardous materials or equipment or unusual methods is necessary for the execution of the Work, the Contractor shall exercise utmost care and carry on such activities under the supervision of properly qualified personnel.

34.09.05 The Contractor shall promptly remedy damage and loss (other than damage or loss insured under property insurance required by the Contract Documents) to properly caused in whole or in part by the Contractor, a Subcontractor or a Sub-subcontractor, or anyone directly or indirectly employed by any of them, or by anyone for whose acts they may be liable and for which the Contractor is reasonable, except damage or loss attributable to acts or omissions of the Owner or Project Consultant or anyone directly or indirectly employed by either of them, or by anyone for whose acts either of them may be liable, and not attributable to the fault of negligence of the Contractor.

34.09.06 The Contractor shall not load or permit any part of the construction or site to be loaded so as to endanger its safety.

34.09.07 Building materials, Contractor's equipment, and other supplies may be stored on the premises, but the placing of same shall be in substantial, watertight storage sheds upon the premises where directed, in which he shall store all materials which would be damaged by weather. This shall in no manner relieve the Contractor from full responsibility for such materials. Sheds and other storage structures must be secured and anchored in a manner sufficient to withstand hurricane-force winds as defined by applicable codes, but not less than a 120-mile-per-hour wind uplift force.

34.10 **Emergencies:** In an emergency affecting the safety of persons or property, the Contractor shall act, at the Contractor's discretion, to prevent threatened damage, injury, or loss.

ARTICLE 35. ROYALTIES AND PATENTS.

35.01 The Contractor shall pay all royalties and license fees.

35.02 The Contractor shall be responsible for all infringement of patent rights and shall assume the defense, including payment of attorney fees and costs, of any suit brought against the Contractor and/or Owner for infringement of any United States patent or for wrongful use of proprietary information of any third party.

35.03 Contractor hereby indemnifies and shall defend and hold harmless Owner, its officers, its officials, its agents, its employees, and its representatives, respectively, from and against all claims, losses, costs, damages, and expenses, including attorney's fees, incurred by Owner and its representatives, respectively, as a result of or in connection with any claims or actions based upon infringement or alleged infringement of any patent, and arising out of the use of the equipment or materials provided under this Construction Contract by Contractor, or out of the process of actions employed by, or on behalf of Contractor in connection with the performances of this Construction Contract. Contractor shall, at its sole expense, promptly defend against any such claim or action unless directed otherwise by Owner or its representatives; provided that Owner or its representatives shall have notified Contractor upon becoming aware of such claims or actions, and provided further, that Contractor's aforementioned obligations shall not apply to equipment, materials, or processes furnished or specified by Owner or its representatives.

35.04 Contractor shall have the right, in order to avoid such claims or actions, to substitute at its expense non-infringing equipment, materials, or processes, or to modify such infringing equipment, materials and processes so they become non-infringing, or obtain the necessary licenses to use the infringing equipment, materials or processes, provided that such substituted and modified equipment, materials and processes shall meet all the requirements and be subject to all the provisions of the Contract Documents.

35.05 The indemnification pursuant to Florida Statute 725.06 and other Florida laws, etc., shall have a separate consideration of, receipt of which is hereby acknowledged and incorporated into the project sum. This is incorporated by reference into the Bid Documentation and Specifications if any.

ARTICLE 36. TAXES.

36.01 Contractor shall pay all taxes, levies, duties, and assessments of every nature which may be applicable to any Work under this Contract.

36.02 The Contract Sum and any agreed changes thereto shall include all taxes imposed by law. Contractor shall make any and all payroll deductions as required by law.

36.03 Contractor herein indemnifies and holds the Owner harmless from any liability on account of any and all such taxes, levies, duties, assessments, and deductions.

ARTICLE 37. INDEMNITY AND HOLD HARMLESS.

37.01 To the fullest extent permitted by law, the Contractor shall defend, indemnify and hold harmless the Owner, its officers, its officials, its agents and employees and each of them hereinafter collectively referred to as the Owner, from and against any and all judgments, demands, claims, causes of action, liability, expenses, losses, costs, fines, and damages (including reasonable attorney's fees and expert's fees) of every kind and character brought against the Owner by any person, party or entity of any kind or nature whatsoever arising out of, incident to, relating or regarding the Contractor's performance under this Agreement, the condition of the premises, and/or the Contractor's acts of omission or commission. The above indemnification does NOT serve as a waiver by Owner of the statutory limits of liability set forth in s.768.28, Florida Statutes, nor does it serve as authorization for the Owner or Contractor to be sued by any third parties.

37.02 Contractor, however, shall not be responsible to Owner for damages resulting out of bodily injury or damages to property which a Court of competent jurisdiction determines as being attributed to the negligence of Owner, its respective agents, servants, employees or officers.

37.03 Said indemnifications by Contractor shall be extended to include all "Subcontractors", deliverers, suppliers, furnishers of material, or anyone acting for, on behalf of, or at the request of the Contractor.

37.04 Contractor recognized the broad nature of this indemnification and hold harmless clause and voluntarily makes this covenant and expressly acknowledges the receipt of Ten ($10.00) Dollars, which payment is incorporated

into the Contract Sum, and such other good and valuable consideration provided by Owner in support of this indemnification in accordance with the laws of the State of Florida.

37.05 This clause shall survive termination of this Agreement and, pursuant to Florida Statute 725.06, be incorporated by reference into any and all Bid Documentation or Specifications.

ARTICLE 38. TERMINATION BY THE CONTRACTOR.

38.01 If the Owner repeatedly fails to perform its material obligations to the Contractor for a period of 30 days after receiving written notice from the Contractor of its intent to terminate hereunder, the Contractor may terminate performance under this Contract by written notice to the Owner and the Project Consultant.

38.02 In such event, the Contractor shall be entitled to recover from the Owner as though the Owner had terminated the Contractor's performance for convenience pursuant to the terms and conditions of this Contract.

ARTICLE 39. OWNER'S RIGHT TO SUSPEND CONTRACTOR'S PERFORMANCE.

39.01 The Owner shall have the right at any time to direct the Contractor to suspend its performance, or any designated part thereof, for any reason whatsoever, or without reason. If any such suspension is directed by the Owner, the Contractor shall immediately comply with the same;

39.02 In the event the Owner directs a suspension of performance under this Paragraph through no fault of the Contractor, the Owner shall pay the Contractor as full compensation for such suspension the Contractor's reasonable costs, actually incurred and paid, of the following items only:

39.02.01 Demobilization and remobilization, including such costs paid to subcontractors;

39.02.02 Preserving and protecting Work in place;

39.02.03 Storage of materials or equipment purchased for the Project, including insurance thereon;

39.02.04 Performing in a later, or during a longer, time frame than that contemplated by this Contract.

ARTICLE 40. TERMINATION BY THE OWNER.

40.01 The Owner may, at the Owner’s option, for any reason and at any time, terminate for convenience any work under this Contract, in whole or from time to time in part, in accordance with the following terms and conditions:

40.02 The Owner shall give written notice of such termination to Contractor 7 days before it becomes effective.

40.02.01 The Contractor shall incur no further obligations in connection with the Work, and the Contractor shall stop work when such termination becomes effective.

40.02.02 The Contractor shall also terminate outstanding orders and subcontracts.

40.02.03 The Contractor shall settle the liabilities and claims arising out of the termination of subcontracts and orders.

40.02.04 The Owner may direct the Contractor to assign the Contractor's right, title, and interest under termination orders or subcontracts to the Owner or its designee.

40.02.05 The Contractor shall transfer title and deliver to the Owner such completed or partially completed Work and materials, equipment, parts, fixtures, information, and Contract rights as the Contractor has.

40.02.06 When terminated for convenience, the Contractor shall be compensated as follows:

a. The Contractor shall submit a termination claim within one year to the Owner and the Project Consultant specifying the amounts due because of the termination for convenience, together with costs, pricing, or other data required by the Owner or the Project Consultant. If the Contractor fails to file a termination claim with the Owner's Project Consultant within one (1) year from the effective date of termination, the Owner shall have no further obligation to the Contractor, and the Contractor waives any and all rights for compensation based upon the termination.

b. The Owner and the Contractor may agree to the compensation, if any, due to the Contractor hereunder;

c. Absent agreement to the amount due to the Contractor, the Owner shall pay the Contractor the following amounts:

1. Contract prices for labor, materials, equipment, and other services accepted under this Contract;

2. Reasonable costs incurred in preparing to perform and in performing the terminated portion of the Work, and in terminating the Contractor's performance, plus a fair and reasonable allowance for direct jobsite overhead (and not home office or other overhead) and profit thereon (such profit shall not include anticipated profit or consequential damages); provided, however, that if it appears that the Contractor would have not profited or would have sustained a loss if the entire Contract would have been completed, no profit shall be allowed or included and the amount of compensation shall be reduced to reflect the anticipated rate of loss, if any;

3. Reasonable costs of settling and paying legitimate claims arising out of the termination of subcontractors or orders pursuant to this Paragraph. These costs shall not include amounts paid in accordance with other provisions hereof.

4. The total sum to be paid the Contractor under this Subparagraph shall not exceed the total Contract Price, as properly adjusted, reduced by the amount of payments otherwise made, and shall in no event include duplication of payment.

40.03 The Owner may terminate this Contract for cause in accordance with the following terms and conditions:

40.03.01 If the Contractor does not perform the Work, or any part thereof, in a timely manner, supply adequate labor, supervisory personnel or proper equipment or materials, or if it fails to timely discharge its obligations for labor, equipment and materials or proceeds to disobey applicable law, or otherwise commits a violation of a material provision of this Contract, then the Owner, in addition to any other rights it may have against the Contractor or others, may terminate the performance of the Contractor for cause upon seven (7) day written notice and assume possession of the Project site and of all materials and equipment at the site and may complete the Work.

40.03.02 In such case, the Contractor shall not be paid further until the Work is complete.

40.03.03 After final completion has been achieved, if any portion of the Contract Price (as it may be modified hereunder) remains after the cost to the Owner of completing the Work, including all costs and expenses of every nature incurred, has been deducted by the Owner, such remainder shall be paid to the Contractor. Otherwise, the Contractor shall pay the Owner any and all costs, fees, damages, or expenses which the Owner has paid or is obligated to pay in excess of the contract price (as it may be modified hereunder). This obligation for payment shall survive the termination of the Contract. In the event the employment of the Contractor is terminated by the Owner for cause pursuant to this Subparagraph and it is subsequently determined by a Court of competent jurisdiction that such termination was without cause, such termination shall thereupon be deemed a Termination for Convenience and the terms of Article 40.02 shall apply.

ARTICLE 41. CONTRACTOR'S INSURANCE

41.01 The Contractor shall maintain such insurance as will protect the Contractor <u>and Owner</u> from claims under Workmen's Compensation Acts, and from any other claims or damages for personal injury, including death <u>and property damage</u>, which may arise from operations under this Contract, whether such operations be by himself or by any subcontractor or anyone directly or indirectly employed by either, as more fully set forth

below and in the amounts provided herein. Prior to commencement of the Work, all Certificates of Insurance executed by authorized representatives of the insurance company shall be filed with the Owner and shall be subject to its approval for accuracy of protection. In addition, the Owner may at any time require that Contractor or its insurer provide any other documentation regarding insurance to the Owner, including, but not limited to, the policy. The Contractor shall not commence Work under this Contract until the provisions of this paragraph have been complied with. The Owner may withhold payments due to the Contractor in accordance with this Contract or terminate or suspend this Contract with all costs or expenses associated with the same to be paid by the Contractor in the event the Contractor fails to comply with any requirement in the Contract regarding insurance. In the event of cancellation of any policy, Contractor is obligated to immediately notify Owner of the same and obtain policy(s) in accordance with the Contract Documents.

41.02 Contractor shall comply with any and all insurance obligations required by law, rules, regulations, etc., including but not limited to those required by State Regulations for Educational Facilities.

41.03 The Contractor will be required to provide a Certificate of Insurance indicating that Workers' Compensation has been provided for all employees in compliance with Chapter 440, Florida Statutes.

41.04 The Contractor shall procure and carry Comprehensive General Liability insurance including contractual and indemnification liability covering this Contract and Products/Completed Operations Liability Insurance covering personal injury and bodily injury in limits of not less than $1,000,000 for injury or death to any one person and not less than $2,000,000 each occurrence; and shall carry insurance against property damage in limits of not less than $1,000,000 per claimant and $2,000,000 per occurrence as a minimum coverage. The Contractor shall also procure and carry Owner's and Contractor's protective liability insurance. In the event that work to be performed hereunder by Contractor involves the removal and disposal of asbestos-related materials, Contractor shall, in addition to the foregoing coverages, also provide and carry an Asbestos Liability-Occurrence form only, with $1,000,000 per occurrence, $2,000,000 aggregate. All insurance shall name the Owner as an additional insured and shall remain in full force and effect for two (2) years following the Contractor’s completion of the work.

41.05 The Contractor shall carry at no additional expense to the Owner, Builders' Risk Insurance for the perils of fire, vandalism, malicious mischief, and those included in extended coverage in the amount of one hundred percent (100%) of the values at risk. Such policies shall be written to protect the Contractor and the Owner as their interest may appear.

41.06 All Contractors shall maintain automobile liability insurance against bodily injury and property damage in at least the amounts of one million dollars ($1,000,000) per claimant, one million dollars ($1,000,000) per occurrence.

41.07 The insurance coverage amounts provided for in this Section are the minimum required insurance amounts. The Owner may require additional insurance or coverage on a case-by-case basis. Any insurance or coverage amounts in addition to those provided for herein shall be specified in the Contract Documents.

41.08 The Owner is not maintaining any insurance on behalf of Contractor covering against loss or damage to the Work or to any other property of Contractor. In the event Contractor maintains insurance against physical loss or damage to Contractor's construction equipment and tools, such insurance shall include an insurer's waiver or rights of subrogation in favor of Owner.

41.09 The requirements contained herein as to types and limits, as well as Owner's approval of insurance coverage to be maintained by Contractor, are not intended to and shall not in any manner limit or qualify the liabilities and obligations assumed by Contractor under the Contract.

41.10 The policies of such insurance in force shall be issued by companies qualified to do business in the State of Florida and be acceptable to the Owner and shall provide that the Owner be given thirty (30) days' advance written notice of the cancellation, expiration, or any material change in the coverage afforded thereunder. The companies must be rated at least A-VI by AM Best or Aa3 by Moody's Investor Service. All policies must remain in effect during performance of the Work and for a period of one year after final completion.

41.11 Uninsured Claims. If any action by any person, firm or corporation is brought or threatened against the Owner or against the Contractor and the Owner for any alleged loss, damage or injury arising out of or in the consequence of the performance or nonperformance of the Contract which, in the reasonable opinion of the Owner, may not be covered by the contingent liability, public liability or property damage insurance policy, or, which together with other such actions or claims seeks a recovery in excess of the amount payable under such policies, the amount of such recovery sought or so much thereof as the Owner reasonably deems necessary, may be withheld by the Owner from any money due the Contractor. The Owner, in its sole discretion, may permit the Contractor to substitute other satisfactory security in lieu of the monies so withheld. If the liability of the Owner is determined by judgment or award of a court or other tribunal of competent jurisdiction, or if such recovery sought shall have been admitted by the Contractor to be valid, the Owner may pay such judgment, award of admitted recovery out of the monies retained by the Owner under the provisions of this subparagraph and return the remaining balance, if any, to the Contractor.

41.12 Adequate funds shall be retained for the insurance costs listed in the Schedule of Values attached to the Contractor's respective Applications for Payment to account for insurance coverage renewals on multi-year projects, coupled with invoices to substantiate the annual costs.

ARTICLE 42. PERFORMANCE BOND AND PAYMENT BOND

42.01 For a Project with an estimated cost of $200,000.00 or more, the Contractor shall furnish bonds covering faithful performance of the Contract and payment of obligations arising thereunder as specifically required in the Contract Documents on the date of execution of the Contract.

ARTICLE 43. RIGHT TO AUDIT PROVISIONS

43.01 Contractor's records which shall include but not be limited to accounting records, written policies and procedures, computer records, disks and software, videos, photographs, subcontract files (including proposals of successful and unsuccessful bidders), original estimates, estimating worksheets, correspondence, change order files (including documentation covering negotiated settlements), and any other supporting evidence necessary to substantiate charges related to this contract (all the foregoing hereinafter referred to as "records") shall be open to inspection and subject to audit and/or reproduction, during normal working hours, by Owner's agent or its authorized representative to the extent necessary to adequately permit evaluation and verification of any invoices, payments or claims submitted by the contractor or any of his payees pursuant to the execution of the contract. Such records subject to examination shall also include, but not be limited to, those records necessary to evaluate and verify direct and indirect costs (including overhead allocations) as they may apply to costs associated with this contract.

43.02 For the purpose of such audits, inspections, examinations, and evaluations, the Owner's agent or authorized representative shall have access to said records from the effective date of this contract, for the duration of the Work, and until 5 years after the date of final payment by Owner to Consultant pursuant to this contract.

43.03 Owner's agent or its authorized representative shall have access to the Contractor's facilities, shall have access to all necessary records, and shall be provided adequate and appropriate work space, in order to conduct audits in compliance with this article. Owner's agent or its authorized representative shall give auditees reasonable advance notice of intended audits.

43.04 Contractor shall require all subcontractors, insurance agents, and material suppliers (payees) to comply with the provisions of this article by insertion of the requirements hereof in any written contract agreement. Failure to obtain such written contracts, which include such provisions, shall be reason to exclude some or all of the related payees' costs from amounts payable to the Contractor pursuant to this contract.

43.05 If an audit inspection or examination in accordance with this article discloses overcharges (of any nature) by the Contractor to the Owner in excess of 10% percent of the total contract billings, the actual cost of the Owner's audit shall be paid by the Contractor.

ARTICLE 44. LAWS AND REGULATIONS

44.01 Contractor and its employees and representative shall at all times comply with all applicable laws, ordinances, statutes, rules, and regulations in effect at the time Work is performed pursuant to the Contract Documents.

44.02 If, during the term of this Construction Contract, there are any changed or new laws, ordinances or regulations not in existence at the time of signing this Construction Contract which become effective and which affect the cost or time of performance of the Construction Contract, Contractor shall within fifteen (15) days of the discovery of said law, ordinance or regulation, notify Owner in writing and submit detailed documentation of such effect in terms of both time and cost of performing the Construction Contract. Upon concurrence by Owner as to the effect of such changes, an adjustment in the compensation and/or time of performance may be made at Owner's discretion.

44.03 If any discrepancy or inconsistency should be discovered between the Contract Documents and any law, ordinance, regulation, order, or decree, Contractor shall, within fifteen (15) days of discovery of the same, report the same in writing to Owner, who will issue such instructions as may be necessary.

ARTICLE 45. DISPUTE RESOLUTION.

45.01 The Owner and Contractor agree that, in the event of a dispute, the parties will attempt to resolve such dispute without litigation and that resolution through mediation procedures will be encouraged.

45.02 The existence of a dispute between the parties shall not be the basis of the Contractor unilaterally electing not to continue performance pursuant to the terms of the Contract Documents.

ARTICLE 46. GOVERNING LAW; VENUE; WAIVER OF TRIAL BY JURY.

46.01 The Construction Contract shall be governed by the laws of the State of Florida.

46.02 In the event either party institutes litigation related in any manner to this contract for any reason, the sole venue for all such litigation shall be in the 17th Judicial Circuit of Florida in Broward County, Florida, or in the U.S. District Court for the Southern District of Florida, as well as the applicable appellate courts serving said venues.

46.03 To the fullest extent permitted by law, Owner, Contractor, and Contractor's Surety do hereby each waive the right to trial by jury in any action or proceeding, including any counterclaims/crossclaims/third (or more remote) party complaints which may be brought by Owner, Contractor, or Surety, jointly and/or severally, arising out of or in any way related to this Construction Contract and/or attendant suretyship including, without limiting the generality thereof, any claim for damages resulting from any act or omission of Owner, Contractor, or Surety, jointly or severally, in any way connected with this Construction Contract.

ARTICLE 47. RIGHTS AND REMEDIES.

47.01 The duties and obligations imposed by the Contract Documents and the rights and remedies available thereunder shall be in addition to and not a limitation of any duties, obligations, rights and remedies otherwise imposed or available by law.

ARTICLE 48. SUCCESSORS, ASSIGNS, AND ASSIGNMENT.

48.01 The Owner and the Contractor each binds itself, its partners, successors, assigns and legal representatives to the other party in respect to all covenants, agreements and obligations contained in the Construction Contract. It is agreed that the Contractor shall not assign, transfer, convey, or otherwise dispose of the contract or its right, title, and interest in and to the same or any part thereof, without the previous consent of the Owner and concurrence of the Sureties.

48.02 If requested by the Owner, the Contractor agrees to assign all Subcontracts required for performance of this Contract to the Owner upon the Owner's or Project Consultant's determination that the Contractor has

defaulted under the Contract Documents. The Contractor shall include in all Subcontracts, equipment leases, and purchase orders a provision requiring the subcontractor, equipment lessor, or supplier, in the event of the Contractor's default under this Contract, to consent to the assignment of their subcontracts to the Owner.

ARTICLE 49. PUBLIC RECORDS.

49.01 A. The City of Pompano Beach is a public agency subject to Chapter 119, Florida Statutes. The Contractor shall comply with Florida's Public Records Law, as amended. Specifically, the Contractor shall:

a. Keep and maintain public records required by the City in order to perform the service;

b. Upon request from the City's custodian of public records, provide the City with a copy of requested records or allow the records to be inspected or copied within a reasonable time at a cost that does not exceed the cost provided in Chapter 119, Florida Statutes, or as otherwise provided by law;

c. Ensure that public records that are exempt or that are confidential and exempt from public record requirements are not disclosed except as authorized by law;

d. Ensure that public records that are exempt or confidential and exempt from public records disclosure requirements are not disclosed except as authorized by law for the duration of the contract term and following completion of the contract if the Contractor does not transfer the records to the City; and

e. Upon completion of the contract, transfer, at no cost to the City, all public records in possession of the Contractor, or keep and maintain public records required by the City to perform the service. If the Contractor transfers all public records to the City upon completion of the contract, the Contractor shall destroy any duplicate public records that are exempt or confidential and exempt from public records disclosure requirements. If the Contractor keeps and maintains public records upon completion of the contract, the Contractor shall meet all applicable requirements for retaining public records. All records stored electronically must be provided to the City, upon request from the City's custodian of public records, in a format that is compatible with the information technology systems of the City.

49.02 The failure of Contractor to comply with the provisions set forth in this Article shall constitute a Default and Breach of this Agreement and the City shall enforce the Default in accordance with the provisions set forth in Article 40.

PUBLIC RECORDS CUSTODIAN

IF THE CONTRACTOR HAS QUESTIONS REGARDING THE APPLICATION OF CHAPTER 119, FLORIDA STATUTES, TO THE CONTRACTOR'S DUTY TO PROVIDE PUBLIC RECORDS RELATING TO THIS CONTRACT, CONTACT THE CUSTODIAN OF PUBLIC RECORDS AT:

CITY CLERK
100 W. Atlantic Blvd., Suite 253
Pompano Beach, Florida 33060
(954) 786-4611
RecordsCustodian@copbfl.com

PROJECT RECORD DOCUMENTS

PART 1 GENERAL

1.01 THE REQUIREMENT

A. The Contractor shall at all times maintain at the site of the project a record copy of the following:

1. Drawings
2. Specifications
3. Addenda
4. Change Orders and other modifications to the Contract.
5. Approved Shop Drawings, Product Data, and Samples.
6. Field Test Records.

1.02 RELATED WORK SPECIFIED ELSEWHERE

A. All applicable sections of the Specifications.

B. General Conditions.

1.03 MAINTENANCE OF DOCUMENTS AND SAMPLES

A. Store documents and samples in the Contractor's field office apart from documents used for construction.

1. Provide files and racks for the storage of documents.
2. Provide a locked cabinet or secure storage space for the storage of samples.

B. File documents and samples in accordance with Construction Specifications Institute (CSI) format.

C. Maintain documents in a clean, dry, legible condition and in good order. Do not use record documents for construction purposes.

D. Make documents and samples available at all times for inspection by the City's Representatives.

1.04 MARKING DEVICES

A. Provide felt-tip marking pens for recording information in the color code designated by the Project Manager.

1.05 RECORDING

Definition: The Project Record is the updated and revised plans and specifications, including a running account of all known revisions and changes made to the original plans and specifications, complete with copies of any field sketches and clarifications, issued over the course of construction. The Project Record is the responsibility of the Contractor.

A. The Contractor shall label each document, "Project Record" in neat large printed letters, or by rubber stamp.

B. Record information concurrently with construction progress. Do not conceal any work until required information is recorded.

C. Drawings: Legibly mark to record actual construction:

1. Horizontal and vertical locations of underground utilities and appurtenances, referenced to permanent surface improvements.
2. Location of internal utilities and appurtenances concealed in the construction, referenced to visible and accessible features of the structure.
3. Field changes of dimension and detail.
4. Changes made by Field Order or by Change Order.
5. Details not on original Contract Drawings.
6. The Record Drawing set shall show benchmark positions and their vertical values. Benchmarks are optional for Plan Views, but required for Profile Views.

D. Specifications and Addenda; Legibly mark each Section to record:

1. Manufacturer, trade name, catalog number, and supplier of each product and item of equipment actually installed.
2. Changes made by field order or by Change Order.

1.06 RECORD DRAWINGS

Definition: The Record Drawings are a revised set of drawings submitted by a Contractor upon completion of a project. They reflect all changes made in the specifications and working drawings during the construction process, and show the exact dimensions, geometry, and location of all elements of the work completed under the Contract.

A. The Contractor shall maintain a full-size (24"X 36") project record to reflect the "record" items of work as the work progresses. Upon completion of the work, the Contractor shall prepare a set of record drawings on full-size, reproducible material and an electronic file in (DWG format, AutoCAD, Version 2018 or more recent version, OR GIS). The record drawings will, in the greatest possible detail, reproduce the exact final conditions of the entire project. Including, but not limited to, final survey, utilities, architecture, structural, civil conditions, electrical, mechanical, paving, landscaping, irrigation, updating all details and all notes, parking, and any other plans related to a specific project. For the purpose

of producing the final record drawings, based on the project record, the Consultant will furnish one set of full-size design drawings on reproducible material and an electronic file (DWG format, AutoCAD, Version 2018 or more recent version, OR GIS) to the Contractor on compact disk or any other electronic means.

Definition: Design drawings or construction drawings are subject to clarifications, but are complete with enough information (plan, sections, dimensions, details, and notes, etc.) to enable the depicted item's construction or replication without additional information.

B. At a minimum, the project record shall be reviewed on the 20th working day of every third month, or more often, as deemed necessary by the Project Manager, after the month in which the final Notice-to Proceed is given, as well as on completion of work. Failure to maintain the project record up-to-date shall be grounds for withholding monthly progress payments until such time as the record drawings are brought up-to-date.

C. The project record shall be accessible to the City at all times during the construction period.

D. The cost of maintaining record changes and preparation of the record drawings shall be included in the unit prices bid for the affected items. Upon completion of the work, the Contractor shall furnish the Project Manager the set of record drawings on full-size, reproducible material and an electronic file in (DWG format, AutoCAD, Version 2018 or more recent version OR GIS) Pay request quantities must match this same set of record drawings. The completed Record drawings shall be delivered to the Program Manager at least forty-eight (48) hours prior to final inspection of the work. The Final Inspection will not be conducted unless the Record Drawings are in the possession of the Project Manager.

E. The completed (or final) record drawings shall be certified by a Professional Land Surveyor, a registered and licensed Architect, a registered and licensed Engineer, a registered and licensed Landscape Architect, registered in the State of Florida. This certification shall consist of the professional discipline official's embossed seal bearing the professional discipline official's registration number, signature and date on each sheet of the drawing set. In addition, the key sheet, cover sheet or first sheet of the plans set shall list the business address and telephone number for all of the professional discipline officials.

F. Representative items of work that should be shown on the record drawings as verified, changed or added are shown below:

1. All deviations from condition shown in the Construction Documents including Change Orders, Field Orders and other varying conditions.

2. Every utility (gas, telephone, power, water, force main, etc.) encountered and/or crossing drainage, water or sanitary sewer facilities (whether it is a conflict or has sufficient clearances) shall be located, both horizontally and

vertically. The clearance between the facilities' horizontal and vertical shall be noted. For instance, if a two-inch (2”) gas main crosses over the top of a six-inch (6”) potable water main, the bottom elevation of the gas main shall be noted, and the top of the water main shall be noted. The difference between the two facilities will be the clearance between the two facilities. Parallel mains shall note the clearance between the outside of the mains. It shall be the Contractor's responsibility to note these crossings on a daily basis and ensure that this information is reflected on the Record Drawing plan set. Crossings will not require state plane coordinates.

3. Pipelines that are "dead" or have been abandoned shall be located during construction and shall be annotated Record Drawing Plans.

4. As-built survey drawings shall meet applicable minimum technical standards for land surveys as outlined in Section 61G17 (https://www.flrules.org/gateway/Division.asp?DivID=269) of the Florida Administrative Code.

NOTE: For technical information on AutoCAD and GIS, please refer to the "Electronic As-Built Requirements" located on the City Engineering Website:

https://cdn.pompanobeachfl.gov/city/pages/engineering/downloadslinks/06_Digital%20Record%20Drawing%20Standards%20and%20Requirements%20(2019).pdf

THE REMAINDER OF THIS PAGE IS LEFT BLANK INTENTIONALLY

EXHIBIT “C”

RFP25-040 - Non-Sewer Area C Sanitary Sewer Improvements, Pages 13 to 15

INSURANCE REQUIREMENTS

6.5.2. Insurance
The insurance described herein reflects the requirements deemed necessary for this contract by the City.

The contractor is responsible for delivering to the City for timely review and written approval/disapproval Certificates of Insurance, which evidence that all insurance required hereunder is in full force and effect and which name the city as an additional insured on a primary basis on all such coverage.

CONTRACTOR shall not commence services under the terms of this Agreement until certification or proof of insurance detailing terms and provisions have been received and approved in writing by the City's Risk Manager. If you are responding to a bid and have questions regarding the insurance requirements hereunder, please contact the City's Purchasing Department at (954) 786-4098. If the contract has already been awarded, please direct any queries and proof of the requisite insurance coverage to the City staff responsible for oversight of the subject project/contract.

CONTRACTOR is responsible for delivering to the CITY for timely review and written approval/disapproval Certificates of Insurance, which evidence that all insurance required hereunder is in full force and effect and which name on a primary basis, the CITY as an additional insured on all such coverage. Such policy or policies shall be issued by United States Treasury-approved companies authorized to do business in the State of Florida. The policies shall be written on forms acceptable to the City's Risk Manager, meet a minimum financial A.M. Best and Company rating of no less than Excellent, and be part of the Florida Insurance Guarantee Association Act. No changes are to be made to these specifications without prior written approval of the City's Risk Manager.

Throughout the term of the agreement/contract, the City, by and through its Risk Manager, reserves the right to review, modify, reject, or accept any insurance policies required by the agreement/contract, including limits, coverages, or endorsements. The City reserves the right, but not the obligation, to review and reject any insurer providing coverage because of poor financial condition or failure to operate legally.

Failure to maintain the required insurance shall be considered an event of default. The requirements herein, as well as the City's review or acceptance of insurance maintained by the Contractor, are not intended to and shall not in any way limit or qualify the liabilities and obligations assumed by the Contractor under the agreement/contract. Throughout the agreement/contract term, the Contractor and all subcontractors or other agents hereunder shall, at its sole expense, maintain in full force and effect the following insurance coverages and limits described herein, including endorsements.

A. Worker's Compensation Insurance covering all employees and providing benefits as required by Florida Statute, Chapter 440, regardless of the size of the company/firm (number of employees) or the state in which the work is to be performed or of the state in which Contractor is obligated to pay compensation to employees engaged in the performance of the work. No exemption will be considered. The contractor further agrees to be responsible for the

employment, control, and conduct of its employees and any injury sustained by such employees during their employment.
B. Liability Insurance

1. Naming the City of Pompano Beach as an additional insured as the City's interests may appear, on General Liability Insurance only, relative to claims arising from the Contractor's negligent acts or omissions in connection with the Contractor's performance under this agreement/contract.

2. Such liability insurance shall include the following checked types of insurance and indicated minimum policy limits:

TYPE OF INSURANCE LIMITS OF LIABILITY
GENERAL LIABILITY:

Minimum $1,000,000 Per Occurrence and $2,000,000 Per Aggregate
* Policy to be written on a Claims incurred basis
XX comprehensive form bodily injury and property damage
XX premises - operations bodily injury and property damage
XX explosion & collapse
XX hazard
XX underground hazard
XX products/completed bodily injury and property damage combined
XX operations hazard
XX contractual insurance bodily injury and property damage combined
XX broad form property damage, bodily injury, and property damage combined
XX independent contractor's personal injury
XX personal injury
__sexual abuse/molestation
__liquor legal liability

AUTOMOBILE LIABILITY:
Minimum $1,000,000 Per Occurrence and $1,000,000 Per aggregate
XX comprehensive form
XX owned
XX hired
XX non-owned

Please note that Florida Statue Section 255.05 requires contractors who enter into a contract with the
City to purchase a payment and performance bond when the contract is in excess of $200,000.

REAL & PERSONAL PROPERTY:
__Comprehensive form
Agent must show proof they have this coverage.

EXCESS LIABILITY:
Minimum $5,000,000 Per Occurrence and $5,000,000 Per Aggregate
XX other than umbrella bodily injury and property damage combined

---

ENVIRONMENTAL / POLLUTION LIABILITY: Minimum $1,000,000 Per Occurrence and $1,000,000 Per
Aggregate
* Policy to be written on a Claims incurred basis
XX environmental/pollution liability

PROFESSIONAL LIABILITY:
Minimum $1,000,000 Per Occurrence and $1,000,000 Per Aggregate
* Policy to be written on a Claims incurred basis
XX professional liability

CYBER LIABILITY:
__Minimum $1,000,000 Per Occurrence and $1,000,000 Per Aggregate
* Policy to be written on a Claims incurred basis
Network Security / Privacy Liability
Breach Response / Notification Sublimit (minimum limit of 50% of policy aggregate)
Technology Products E&O - $1,000,000 (only applicable for vendors supplying technologyrelated
services and or products)
Coverage shall be maintained in effect during the period of the Agreement and for not less than four (4) years after termination/ completion of the Agreement.

CRIME LIABILITY:
__Minimum $1,000,000 Per Occurrence and $1,000,000 Per Aggregate
* Policy to be written on a Claims incurred basis

---

3. If Professional Liability insurance is required, the Contractor agrees the indemnification and hold harmless provisions of the agreement/contract shall survive the termination or expiration of the agreement/contract for a period of three (3) years unless terminated sooner by the applicable statute of limitations.

C. **Employer's Liability:** The contractor and all subcontractors shall, for the benefit of its employees, provide, carry, maintain, and pay for the Employer's Liability Insurance in the minimum amount of One Hundred Thousand Dollars ($100,000.00) per employee and Five Hundred Thousand Dollars ($500,000) per aggregate.

D. **Policies**: Whenever, under the provisions of the agreement/contract, insurance is required of the Contractor, the Contractor shall promptly provide the following:
i. Certificates of Insurance evidencing the required coverage;
ii. Names and addresses of companies providing coverage
iii. Effective and expiration dates of policies; and
iv. A provision in all policies affording City thirty (30) days written notice by a Carrier of any cancellation or material change in any policy.

E. **Insurance Cancellation or Modification**: Should any required insurance policies be canceled before the expiration date or modified or substantially modified, the issuing company/firm shall provide thirty (30) days written notice to the City.

F. **Waiver of Subrogation:** The contractor hereby waives any and all rights of subrogation

against the City, its officers, employees, and agents for each required policy. When required by the insurer, or should a policy condition not permit an insured to enter into a pre-loss agreement/contract to waive subrogation without an endorsement, then the contractor shall notify the insurer and request the policy be endorsed with a Waiver of Transfer of Rights of Recovery Against Others or its equivalent. This Waiver of Subrogation requirement shall not apply to any policy that includes a condition to the policy not specifically prohibiting such an endorsement or voids coverage should the Contractor enter into such agreement/contract on a pre-loss basis.

G. The Contractor shall furnish to the City the certification or proof of insurance required by the provisions set forth above within ten (10) days after notification of the award of the agreement/contract. Certificate(s) to be issued to City of Pompano Beach, Attention Risk Manager, 100 West Atlantic Boulevard, Pompano Beach, Florida, 33060.

H. Builder Risk insurance is required.

CERTIFICATE OF LIABILITY INSURANCE

DATE (MM/DD/YYYY): 08/18/2025

THIS CERTIFICATE IS ISSUED AS A MATTER OF INFORMATION ONLY AND CONFERS NO RIGHTS UPON THE CERTIFICATE HOLDER. THIS CERTIFICATE DOES NOT AFFIRMATIVELY OR NEGATIVELY AMEND, EXTEND OR ALTER THE COVERAGE AFFORDED BY THE POLICIES BELOW. THIS CERTIFICATE OF INSURANCE DOES NOT CONSTITUTE A CONTRACT BETWEEN THE ISSUING INSURER(S), AUTHORIZED REPRESENTATIVE OR PRODUCER, AND THE CERTIFICATE HOLDER.

IMPORTANT: If the certificate holder is an ADDITIONAL INSURED, the policy(ies) must have ADDITIONAL INSURED provisions or be endorsed. If SUBROGATION IS WAIVED, subject to the terms and conditions of the policy, certain policies may require an endorsement. A statement on this certificate does not confer rights to the certificate holder in lieu of such endorsement(s).

PRODUCER
Guy Hurley, LLC
989 E. South Boulevard
Suite 200
Rochester Hills MI 48307

CONTACT NAME: Nate Maroun
PHONE (A/C, No, Ext): (248) 519-1400 FAX (A/C, No): (248) 519-1401
E-MAIL ADDRESS: NMaroun@ghbh.com

INSURER(S) AFFORDING COVERAGE	NAIC #
INSURER A : Steadfast Insurance Company	
INSURER B : R-T Specialty	
INSURER C : Starstone	
INSURER D : Carolina Casualty Insurance Company	
INSURER E :	
INSURER F :	

INSURED
DBF Construction, LLC
1850 NW 15th Ave Suite 225
Pompano Beach FL 33069

COVERAGES **CERTIFICATE NUMBER:** 25-26 **REVISION NUMBER:**

THIS IS TO CERTIFY THAT THE POLICIES OF INSURANCE LISTED BELOW HAVE BEEN ISSUED TO THE INSURED NAMED ABOVE FOR THE POLICY PERIOD INDICATED. NOTWITHSTANDING ANY REQUIREMENT, TERM OR CONDITION OF ANY CONTRACT OR OTHER DOCUMENT WITH RESPECT TO WHICH THIS CERTIFICATE MAY BE ISSUED OR MAY PERTAIN, THE INSURANCE AFFORDED BY THE POLICIES DESCRIBED HEREIN IS SUBJECT TO ALL THE TERMS, EXCLUSIONS AND CONDITIONS OF SUCH POLICIES. LIMITS SHOWN MAY HAVE BEEN REDUCED BY PAID CLAIMS.

INSR LTR	TYPE OF INSURANCE	ADDL INSD	SUBR WVD	POLICY NUMBER	POLICY EFF (MM/DD/YYYY)	POLICY EXP (MM/DD/YYYY)	LIMITS	
A	[X] COMMERCIAL GENERAL LIABILITY [ ] CLAIMS-MADE [X] OCCUR GEN'L AGGREGATE LIMIT APPLIES PER: [ ] POLICY [ ] PRO-JECT [ ] LOC [ ] OTHER:	Y	Y	GLO 8619409-00	08/10/2025	06/20/2026	EACH OCCURRENCE DAMAGE TO RENTED PREMISES (Ea occurrence) MED EXP (Any one person) PERSONAL & ADV INJURY GENERAL AGGREGATE PRODUCTS - COMP/OP AGG	$ 1,000,000 $ 100,000 $ 5,000 $ 1,000,000 $ 2,000,000 $ 2,000,000
B	AUTOMOBILE LIABILITY [ ] ANY AUTO [ ] OWNED AUTOS ONLY [X] SCHEDULED AUTOS [ ] HIRED AUTOS ONLY [ ] NON-OWNED AUTOS ONLY	Y	Y	BA090000018675	01/30/2024	01/30/2025	COMBINED SINGLE LIMIT (Ea accident) BODILY INJURY (Per person) BODILY INJURY (Per accident) PROPERTY DAMAGE (Per accident)	$ 1,000,000 $ $ $
C	[X] UMBRELLA LIAB [ ] OCCUR [ ] EXCESS LIAB [ ] CLAIMS-MADE [ ] DED [ ] RETENTION $	Y	Y	CSX00071856P-02	08/10/2025	06/20/2026	EACH OCCURRENCE AGGREGATE	$ 2,000,000 $ 2,000,000
D	WORKERS COMPENSATION AND EMPLOYERS' LIABILITY ANY PROPRIETOR/PARTNER/EXECUTIVE OFFICER/MEMBER EXCLUDED? (Mandatory in NH) Y/N: N If yes, describe under DESCRIPTION OF OPERATIONS below	N / A	Y	BIN831796809	06/20/2025	06/20/2026	[ ] PER STATUTE [ ] OTH-ER E.L. EACH ACCIDENT E.L. DISEASE - EA EMPLOYEE E.L. DISEASE - POLICY LIMIT	$ 1,000,000 $ 1,000,000 $ 1,000,000

APPROVED DavidDaley
By David Daley at 4:59 pm, Aug 20, 2025

DESCRIPTION OF OPERATIONS / LOCATIONS / VEHICLES (ACORD 101, Additional Remarks Schedule, may be attached if more space is required)

Certificate Holder is included as an Additional Insured with Waiver of Subrogation and Notice of Cancellation, as per written contract.

CERTIFICATE HOLDER

City of Pompano Beach
100 West Atlantic Boulevard
Pompano Beach FL 33060

CANCELLATION

SHOULD ANY OF THE ABOVE DESCRIBED POLICIES BE CANCELLED BEFORE THE EXPIRATION DATE THEREOF, NOTICE WILL BE DELIVERED IN ACCORDANCE WITH THE POLICY PROVISIONS.

AUTHORIZED REPRESENTATIVE

© 1988-2015 ACORD CORPORATION. All rights reserved.

NON SEWER AREA C SANITARY SEWER IMPROVEMENTS

POMPANO BEACH, FL

Attachment B – Plans and Drawings

DATE OF ISSUE: 01/22/25

pompano beach
Florida's Warmest Welcome

CITY OF POMPANO BEACH
100 WEST ATLANTIC BOULEVARD
POMPANO BEACH, FL 33060
Phone: 954.786.4600

CITY COMMISSION/COUNCIL

REX HARDIN	MAYOR
ALISON FOURNIER	VICE MAYOR
AUDREY FESIK	COMMISSIONER
RHONDA EATON	COMMISSIONER
BEVERLY PERKINS	COMMISSIONER
DARLENE SMITH	COMMISSIONER

ADMINISTRATION/STAFF

GREG HARRISON	CITY MANAGER
JOHN SFIROPOULOS, P.E.	CITY ENGINEER
A. RANDOLPH BROWN	UTILITIES DIRECTOR
NATHANIEL J WATSON	UTILITIES FIELD OPERATIONS SUPERINTENDENT

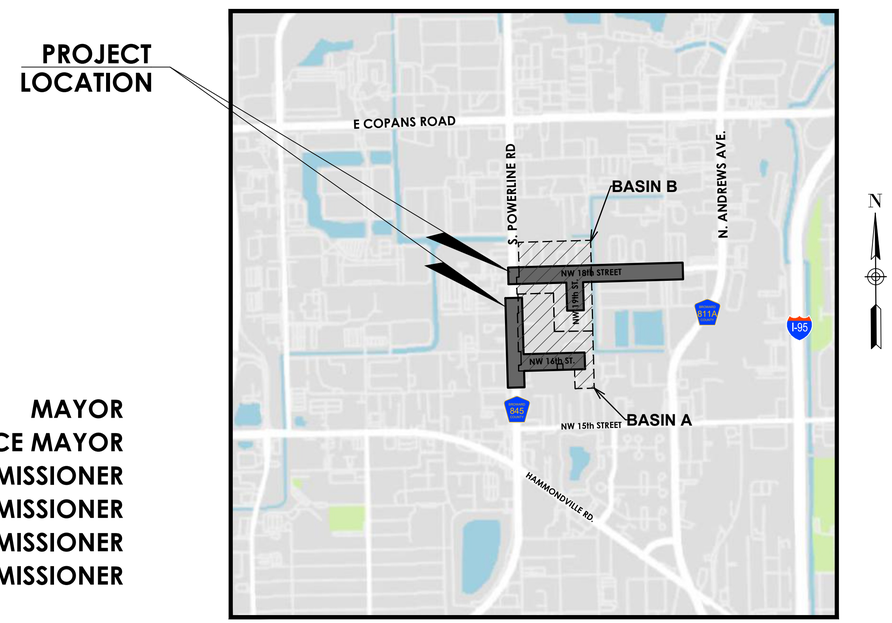

SECTION 27, 28, TOWNSHIP 48S, RANGE 42E

LOCATION MAP

N.T.S

INDEX OF DRAWINGS

SHT #	DWG #	SHEET TITLE
01	COV-1	COVER SHEET
02 - 05	GN-1 - GN-4	GENERAL NOTES
06	GN-5	LEGEND AND ABBREVIATIONS
07	K-1	KEY SHEET
08 - 16	SS-01 - SS-09	SANITARY PLAN AND PROFILE
17	LS-1	LIFT STATION PLAN
18	LS-2	LIFT STATION PLAN AND SECTION
19	SEC-1	TYPICAL SECTION
20 - 24	R-01 - R-05	RESTORATION PLAN
25 - 34	D-01 - D-10	DETAILS
35 - 37	LP-01 - LP-03	LANDSCAPE PLANS
38 - 43	E-01 - E-06	ELECTRICAL PLANS

Sunshine811
Call 811 or visit sunshine811.com two full business days before digging to have buried facilities located and marked.
Check positive response codes before you dig!

VERTICAL DATUM INFORMATION
ALL ELEVATIONS SHOWN ARE IN NORTH AMERICAN VERTICAL DATUM OF 1988 (NAVD88)

cma
chen moore and associates
500 West Cypress Creek Road,
Suite 600
Ft. Lauderdale, FL 33309
954.730.0707
www.chenmoore.com

REGISTRATION
THIS ITEM HAS BEEN DIGITALLY SIGNED AND SEALED BY:
ON THE DATE ADJACENT TO THE SEAL. PRINTED COPIES OF THIS DOCUMENT ARE NOT CONSIDERED SIGNED AND SEALED AND THE SIGNATURE MUST BE VERIFIED ON ANY ELECTRONIC COPIES.
DAVID EDUARDO CASTRO-ELIAS LICENSE No. 85558 STATE OF FLORIDA PROFESSIONAL ENGINEER
THE ABOVE NAMED PROFESSIONAL ENGINEER SHALL BE RESPONSIBLE FOR THIS SHEET IN ACCORDANCE WITH RULE 61G15-23.004, F.A.C.

PROJECT NUMBER 23-0092.00085
CLIENT PROJECT NUMBER P331425
DRAWING NUMBER COV-1
01 OF 43

Plot Date: 1/22/2025 5:20:08 PM Username: jspicer Layout Name: COV-1
Folder Path: V:\Projects\2023\23-0092.00085 - area c sanitary sewer design services\Design\CAD\Sheets Filename: 23-0092.00085 Cover.dwg

GENERAL NOTES

THE LOCATION AND SIZE OF ALL EXISTING UTILITIES AND TOPOGRAPHY HAVE BEEN PREPARED FROM INFORMATION AVAILABLE TO THE ENGINEER. THIS INFORMATION IS NOT GUARANTEED AND IT IS THE CONTRACTOR'S RESPONSIBILITY TO DETERMINE THE EXACT LOCATION OF ANY EXISTING UTILITIES AND TOPOGRAPHY PRIOR TO CONSTRUCTION. THE CONTRACTOR SHALL VERIFY ALL UTILITIES, BY ELECTRONIC METHODS AND BY HAND EXCAVATION IN COORDINATION WITH ALL UTILITY COMPANIES, PRIOR TO BEGINNING ANY CONSTRUCTION OPERATIONS. THIS WORK BY THE CONTRACTOR SHALL BE CONSIDERED INCIDENTAL TO THE CONTRACT AND NO ADDITIONAL COMPENSATION SHALL BE ALLOWED.

1. APPLICABLE CODES
   - 1.1. GENERAL
     ALL CONSTRUCTION, MATERIALS AND TESTING SHALL CONFORM TO THE STANDARDS AND SPECIFICATIONS OF LOCAL, COUNTY, STATE AND NATIONAL CODES WHERE APPLICABLE.
     WHEN ANY OF THE GOVERNING REGULATORY AGENCIE'S STANDARDS AND SPECIFICATIONS ARE IN CONFLICT, THE MORE STRINGENT OF THE TWO SHALL APPLY.
   - 1.2. CONSTRUCTION SAFETY
     ALL CONSTRUCTION SHALL BE DONE IN CONFORMANCE WITH THE RULES AND REGULATIONS OF THE OCCUPATIONAL SAFETY AND HEALTH ADMINISTRATION (OSHA) AND THE MANUAL OF UNIFORM TRAFFIC CONTROL DEVICES (MUTCD).
   - 1.3. TRENCH SAFETY ACT
     CONTRACTOR SHALL BE SOLELY RESPONSIBLE FOR COMPLIANCE WITH THE STATE FLORIDA TRENCH SAFETY ACT.
   - 1.4. SURVEY DATA
     ALL ELEVATIONS ON THE PLANS OR REFERENCED IN THE SPECIFICATIONS UNLESS OTHERWISE NOTED, ARE BASED ON NORTH AMERICAN VERTICAL DATUM OF 1988 (NAVD 88').
2. PRECONSTRUCTION RESPONSIBILITIES
   - 2.1. THE CONTRACTOR SHALL OBTAIN A SUNSHINE STATE ONE CALL AT 811 CERTIFICATION NUMBER AT LEAST 48 HOURS PRIOR TO BEGINNING ANY EXCAVATION.
   - 2.2. PRIOR TO BEGINNING CONSTRUCTION, THE CONTRACTOR SHALL VERIFY THE SIZE, LOCATION, ELEVATION, AND MATERIAL OF ALL EXISTING UTILITIES WITHIN THE AREA OF CONSTRUCTION.
   - 2.3. EXISTING UTILITY LOCATIONS SHOWN ON THESE PLANS ARE APPROXIMATE. THE ENGINEER ASSUMES NO RESPONSIBILITY FOR THE ACCURACY OF EXISTING UTILITIES SHOWN OR FOR ANY EXISTING UTILITIES NOT SHOWN.
   - 2.4. THE CONTRACTOR SHALL BE RESPONSIBLE FOR DAMAGE TO ANY EXISTING UTILITIES FOR WHICH HE FAILS TO REQUEST LOCATIONS FROM THE UTILITY OWNER. HE IS RESPONSIBLE AS WELL FOR DAMAGE TO ANY EXISTING UTILITIES WHICH ARE PROPERLY LOCATED.
   - 2.5. CONTRACTOR TO PROVIDE CD/DVD PRE-CONSTRUCTION VIDEO PRIOR TO COMMENCING WORK. ENGINEER TO REVIEW AND APPROVE VIDEO DURING THE SHOP DRAWING REVIEW PHASE FOR COMPLETENESS.
3. INSPECTIONS
   - 3.1. THE CONTRACTOR SHALL NOTIFY THE OWNER/MUNICIPAL AUTHORITY, THE ENGINEER OF RECORD AND THE COUNTY, IF APPLICABLE, AT LEAST 48 HOURS PRIOR TO BEGINNING CONSTRUCTION AND PRIOR TO THE INSPECTION OF THE FOLLOWING ITEMS:
     - 3.1.1. SANITARY SEWER
     - 3.1.2. SUBGRADE - SUBMIT AND HAVE APPROVED DENSITIES PRIOR TO PLACEMENT OF ROCK
     - 3.1.3. LIMEROCK BASE - SUBMIT AND HAVE APPROVED DENSITIES AND AS-BUILTS PRIOR TO THE PLACEMENT OF ANY ASPHALT.
     - 3.1.4. ASPHALTIC CONCRETE
     - 3.1.5. LIFT STATION
     - 3.1.6. FINAL INSPECTION
4. SHOP DRAWINGS
   - 4.1. PRIOR TO THEIR CONSTRUCTION OR INSTALLATION, SHOP DRAWINGS AND/OR APPROVED MATERIALS/PRODUCTS LISTS SHALL BE SUBMITTED TO AND REVIEWED BY THE OWNER/MUNICIPAL AUTHORITY AND ENGINEER OF RECORD FOR MANHOLES, PIPING, CATCH BASINS, FIRE HYDRANTS, VALVES AND OTHER MECHANICAL/ELECTRICAL EQUIPMENT WITH ASSOCIATED STRUCTURES, INCLUDING ALL DATA. CATALOGUE LITERATURE SHALL BE SUBMITTED FOR PROPOSED PIPES, FITTINGS, AND APPURTENANCES.
   - 4.2. PRIOR TO SUBMITTING SHOP DRAWINGS TO THE ENGINEER, THE CONTRACTOR SHALL REVIEW AND APPROVE THE DRAWINGS, AND SHALL NOTE IN RED ANY DEVIATIONS FROM THE ENGINEERS' PLANS OR SPECIFICATIONS.
   - 4.3. INDIVIDUAL SHOP DRAWINGS FOR ALL PRECAST STRUCTURES ARE REQUIRED. CATALOGUE LITERATURE WILL NOT BE ACCEPTED FOR PRECAST STRUCTURES.
5. TEMPORARY FACILITIES
   - 5.1. TEMPORARY UTILITIES
     IT SHALL BE THE CONTRACTOR'S RESPONSIBILITY TO ARRANGE FOR OR SUPPLY TEMPORARY WATER SERVICE, SANITARY FACILITIES AND ELECTRICITY TO HIS EMPLOYEES AND SUBCONTRACTORS FOR THEIR USE DURING CONSTRUCTION.
   - 5.2. TRAFFIC REGULATION
     - 5.2.1. MAINTENANCE OF TRAFFIC IN THE PUBLIC RIGHT-OF-WAY SHALL BE IN ACCORDANCE WITH THE MUTCD AND ANY REGULATORY PERMIT REQUIREMENTS.
     - 5.2.2. ALL OPEN TRENCHES AND HOLES ADJACENT TO ROADWAYS OR WALKWAYS SHALL BE PROPERLY MARKED AND BARRICADED TO ASSURE THE SAFETY OF BOTH VEHICULAR AND PEDESTRIAN TRAFFIC.
     - 5.2.3. NO TRENCHES OR HOLES NEAR WALKWAYS OR IN ROADWAYS OR THEIR SHOULDERS ARE TO BE LEFT OPEN DURING NIGHTTIME HOURS WITHOUT EXPRESS PERMISSION OF THE ENGINEER, OWNER/MUNICIPAL AUTHORITY AND LOCAL OR COUNTY AUTHORITY.
     - 5.2.4. ALL CONSTRUCTION WITHIN FDOT R/W MUST CONFORM WITH FDOT SPECIFICATIONS, STANDARDS AND PERMIT REQUIREMENTS. NO WORK SHALL COMMENCE WITHIN FDOT R/W'S WITHOUT AN FDOT PERMIT. FULL LANE WIDTH RESTORATION TO MATCH EXISTING PAVEMENT SECTION IS REQUIRED IN ACCORDANCE WITH FDOT STANDARDS FOR PROPOSED WORK WITHIN FDOT R/W.
     - 5.2.5. CONTRACTOR SHALL PREPARE AND SUBMIT MAINTENANCE OF TRAFFIC PLAN (MOT) WHERE REQUIRED BY FEDERAL, STATE, COUNTY OR LOCAL AGENCIES HAVING JURISDICTION. CONTRACTOR SHALL OBTAIN ALL REQUIRED APPROVALS AND PERMITS ASSOCIATED WITH THE MOT'S. ALL MOT'S TO BE ATSSA CERTIFIED.
6. PROJECT CLOSEOUT
   - 6.1. CLEANING OUT
     - 6.1.1. DURING CONSTRUCTION, THE PROJECT SITE AND ALL ADJACENT AREAS SHALL BE MAINTAINED IN A NEAT AND CLEAN MANNER. UPON FINAL CLEAN UP, THE PROJECT SITE SHALL BE LEFT CLEAR OF ALL SURPLUS MATERIAL OR TRASH. THE PAVED AREAS SHALL BE SWEPT BROOM CLEAN AS DIRECTED BY THE ENGINEER.
     - 6.1.2. THE CONTRACTOR SHALL RESTORE OR REPLACE, WHEN AND AS DIRECTED BY THE ENGINEER OR OWNER/MUNICIPAL AUTHORITY, ANY PUBLIC OR PRIVATE PROPERTY DAMAGED BY HIS WORK, EQUIPMENT, EMPLOYEES OR THOSE OF HIS SUBCONTRACTORS TO A CONDITION AT LEAST EQUAL TO THAT EXISTING IMMEDIATELY PRIOR TO THE BEGINNING OF OPERATIONS. TO THIS END, THE CONTRACTOR SHALL DO AS REQUIRED ALL NECESSARY ROADWAY OR DRIVEWAY, WALKWAYS, IRRIGATION AND LANDSCAPING WORK. SUITABLE MATERIALS AND METHODS SHALL BE USED FOR SUCH RESTORATION.
     - 6.1.3. WHERE MATERIAL OR DEBRIS HAS WASHED OR FLOWED INTO OR BEEN PLACED IN WATER COURSES, DITCHES, DRAINS, CATCH BASINS, OR ELSEWHERE AS A RESULT OF THE CONTRACTOR'S OPERATIONS, SUCH MATERIAL OR DEBRIS SHALL BE REMOVED, SATISFACTORILY DISPOSED OF DURING PROGRESS OF THE WORK, AND THE AREA KEPT IN A CLEAN AND NEAT CONDITION AS DIRECTED BY OF THE ENGINEER.
     - 6.1.4. CONTRACTOR SHALL DISPOSE OF ALL SITE DEMOLITION IN ACCORDANCE WITH STATE AND LOCAL REGULATIONS.
   - 6.2. PROJECT RECORD DOCUMENTS
     - 6.2.1. THE CONTRACTOR SHALL MAINTAIN ACCURATE AND COMPLETE RECORDS OF WORK ITEMS COMPLETED.
     - 6.2.2. PRIOR TO THE PLACEMENT OF ANY ASPHALT OR CONCRETE PAVEMENT, THE CONTRACTOR SHALL SUBMIT TO THE ENGINEER "AS-BUILT" PLANS SHOWING LIMEROCK BASE GRADES, AND ALL DRAINAGE, WATER, AND SEWER IMPROVEMENTS. PAVING OPERATIONS SHALL NOT COMMENCE UNTIL THE ENGINEER AND THE APPROVING AGENCY HAS REVIEWED THE "AS-BUILTS".
     - 6.2.3. ALL REQUIRED DENSITY AND LBR TEST RESULTS FOR SUBGRADE SHALL BE PROVIDED TO THE ENGINEER AND THE OWNER/MUNICIPAL AUTHORITY PRIOR TO PLACING LIMEROCK BASE MATERIAL.
     - 6.2.4. ALL REQUIRED DENSITY AND LBR TEST RESULTS FOR LIMEROCK SHALL BE PROVIDED TO THE ENGINEER AND THE OWNER/MUNICIPAL AUTHORITY PRIOR TO PLACING ASPHALT.
     - 6.2.5. ALL "AS-BUILT" INFORMATION SUBMITTED TO THE ENGINEER SHALL BE SUFFICIENTLY ACCURATE, CLEAR AND LEGIBLE TO THE SATISFACTION OF THE ENGINEER THAT THE INFORMATION PROVIDES A TRUE REPRESENTATION OF THE IMPROVEMENTS CONSTRUCTED.
     - 6.2.6. UPON COMPLETION OF CONSTRUCTION, THE CONTRACTOR SHALL SUBMIT TO THE ENGINEER OF RECORD TWO COMPLETE SET OF "AS-BUILT" CONSTRUCTION DRAWINGS. THESE DRAWINGS SHALL BE MARKED TO SHOW "RECORD DRAWING" OR "AS-BUILT" CONSTRUCTION CHANGES AND DIMENSIONED LOCATIONS AND ELEVATIONS OF ALL IMPROVEMENTS AND SHALL BE SIGNED AND SEALED BY A REGISTERED LAND SURVEYOR OR ENGINEER. FINAL AS-BUILT INFORMATION SHALL BE SUBMITTED ON AN AUTOCAD & PDF FORMAT AS DIRECTED BY THE ENGINEER.
7. STORM DRAINAGE
   - 7.1. CONTRACTOR MAY UTILIZE ONE OF THE FOLLOWING MATERIALS (AS DIRECTED AND APPROVED BY THE OWNER/MUNICIPAL AUTHORITY) ON A SIZE FOR SIZE BASIS:
     - 7.1.1. ALUMINUM
       - 7.1.1.1. PIPE SHALL BE ALUMINUM, MANUFACTURED IN CONFORMANCE WITH ASTM B-209. METAL PIPE SHALL NOT BE ALLOWED WITHIN THE ROAD RIGHT-OF-WAY.
       - 7.1.1.2. PIPE SHALL BE SPIRAL RIB DRAINAGE PIPE WITH 3/4" X 3/4" RIBS, APPROXIMATELY 7-1/2" ON CENTER. GAUGE THICKNESS SHALL MEET FDOT STANDARD 945-1.
       - 7.1.1.3. PIPE COUPLING BANDS SHALL BE 12" WIDE STANDARD SPLIT BANDS OF THE SAME ALLOY AS THE PIPE AND MAY BE ONE GAUGE LIGHTER THAN THE PIPE.
       - 7.1.1.4. POLYURETHANE OR OTHER SEALANT SHALL BE USED WITH COUPLING BANDS ON ALL NON-PERFORATED PIPE.
       - 7.1.1.5. CONTECH ULTRA-FLO OR APPROVED EQUAL.
     - 7.1.2. REINFORCED CONCRETE (RCP)
       - 7.1.2.1. REQUIREMENTS OF SECTION 449, INCLUSIVE, OF THE FLORIDA D.O.T. ALL REINFORCED CONCRETE PIPE SHALL BE CLASS III WATER TIGHT AND CONFORM TO THE STANDARD SPECIFICATIONS
       - 7.1.2.2. JOINTS IN RCP SHALL EMPLOY 0-RING TYPE GASKETS AS SPECIFIED IN SECTION 942-1 OF FLORIDA D.O.T. STANDARD SPECIFICATIONS AND ASTM C443-98.
       - 7.1.2.3. PRECAST CONCRETE MANHOLES AND CATCH BASINS SHALL MEET THE REQUIREMENTS OF A.S.T.M. SPECIFICATION C-478 AND 64T.
       - 7.1.2.4. CONCRETE FOR PRECAST MANHOLES AND CATCH BASINS SHALL HAVE A MINIMUM COMPRESSIVE STRENGTH OF 4000 PSI AT 28 DAYS.
       - 7.1.2.5. REINFORCING STEEL FOR MANHOLES AND CATCH BASINS SHALL CONFORM TO A.S.T.M. SPECIFICATION A-615 AND A-305, LATEST REVISION.
       - 7.1.2.6. ALL RE-BAR SPLICES IN CONCRETE STRUCTURES SHALL HAVE A MINIMUM LAP OF 24 BAR DIAMETERS.
       - 7.1.2.7. ALL JOINTS IN CONCRETE STRUCTURES SHALL BE FINISHED WATERTIGHT.
       - 7.1.2.8. ALL SPACES AROUND PIPING ENTERING OR LEAVING MANHOLES AND CATCH BASINS SHALL BE COMPLETELY FILLED WITH 2:1 CEMENT MORTAR.
       - 7.1.2.9. CONCRETE PIPE FOR STORM SEWERS ON DOT PROJECTS SHALL CONFORM TO FDOT 430-2.
       - 7.1.2.10. CONCRETE PIPE FOR STORM SEWERS SHALL CONFORM TO ASTM L76-79, TABLE III WALL B OR LATEST REVISION. ALL PIPE SHALL HAVE MODIFIED TONGUE AND GROOVE JOINTS AND HAVE RUBBER GASKETS, UNLESS OTHERWISE SPECIFIED.
       - 7.1.2.11. RCP OR THE FOLLOWING APPROVED EQUALS MAY BE USED: CONTECH A-2000 PVC OR ADS HP STORM.
     - 7.1.3. HIGH DENSITY POLYETHYLENE PIPE (HDPE)
       - 7.1.3.1. HIGH DENSITY POLYETHYLENE PIPE FOR STORM SEWERS SHALL CONFORM TO FDOT 948-2. ADS HP STORM PIPE IS ACCEPTABLE OR THE FOLLOWING APPROVED EQUALS: CONTECH A-2000 PVC OR RCP
     - 7.1.4. POLYVINYL-CHLORIDE PIPE (PVC)
       - 7.1.4.1. POLYVINYL-CHLORIDE PIPE FOR STORM SEWERS SHALL CONFORM TO FDOT 948-1.
       - 7.1.4.2. CONTECH A2000 PVC OR APPROVED EQUALS (RCP OR ADS HP STORM).
   - 7.2. BEDDING AND INITIAL BACKFILL OVER DRAINAGE PIPE SHALL BE SAND WITH NO ROCK LARGER THAN 3/4" & 2" DIAMETER, RESPECTIVELY.
   - 7.3. BACKFILL MATERIAL UNDER PAVED AREAS SHALL BE COMPACTED TO 98% OF THE MAXIMUM DENSITY AS DETERMINED BY AASHTO T-180.
   - 7.4. BACKFILL MATERIAL UNDER AREAS NOT TO BE PAVED SHALL BE COMPACTED TO 95% OF THE MAXIMUM DENSITY AS DETERMINED BY AASHTO T-180. (INCLUDES SWALE AREAS.)
   - 7.5. STORM WATER POLLUTION PROTECTION PLAN. CONTRACTOR SHALL INSTALL AND MAINTAIN TEMPORARY SILT SCREENERS IN CATCH BASINS AND AT LOCATIONS AS DIRECTED BY THE ENGINEER UNTIL FINAL ACCEPTANCE OCCURS.
8. PAVING
   - 8.1. GENERAL
     - 8.1.1. ALL UNDERGROUND UTILITIES SHALL BE COMPLETED PRIOR TO THE CONSTRUCTION OF THE LIMEROCK BASE AND PRIOR TO THE PLACEMENT OF THE PAVEMENT.
     - 8.1.2. ALL STREET CORNER PAVEMENT RADII SHALL BE 35 FEET UNLESS OTHERWISE NOTED ON THE PLANS.
     - 8.1.3. TWO ROWS OF BAHIA SOD SHALL BE LAID ALONG CURB WITHIN TWO WEEKS OR AS DIRECTED BY THE ENGINEER OF INSTALLING FIRST LIFT OF ASPHALT.
   - 8.2. MATERIALS
     - 8.2.1. LIMEROCK BASE MATERIAL SHALL HAVE A MINIMUM OF 70% CARBONATES (CALCIUM AND MAGNESIUM) WITH A MINIMUM LBR OF 100 FROM FDOT APPROVED QUARRY AND MEET FDOT STANDARDS.
     - 8.2.2. SUBGRADE MATERIAL SHALL HAVE A MINIMUM LBR OF 40 AND INSTALLED AT 98% AASHTO T-180 SPECS AND MEET FDOT STANDARDS. (INCLUDES STABILIZED ROADWAY SHOULDERS.)
     - 8.2.3. PRIME COAT AND TACK COAT SHALL MEET FLORIDA DEPARTMENT OF TRANSPORTATION (FDOT) STANDARDS.
     - 8.2.4. SURFACE COURSE SHALL BE EQUAL TO FDOT TYPE SP9.5 ASPHALTIC CONCRETE. CONTRACTOR TO SUBMIT FDOT APPROVED ASPHALT MIX SHOP DRAWING FOR ENGINEERS REVIEW/APPROVAL PRIOR TO PLACEMENT OF ANY ASPHALT.
   - 8.3. INSTALLATION
     - 8.3.1. LIMEROCK BASE MATERIAL SHALL BE 8" THICK OR AS SHOWN AND SHALL BE COMPACTED TO 98% OF THE MAXIMUM DENSITY AS DETERMINED BY AASHTO T-180.
     - 8.3.2. LIMEROCK BASE MATERIAL SHALL BE PLACED IN TWO OR MORE EQUAL LIFTS AND DENSITIES TAKEN ON EACH LIFT.
     - 8.3.3. ASPHALTIC CONCRETE SHALL BE AS INDICATED ON PLANS, AND PLACED IN TWO (2) EQUAL LIFTS UNLESS OTHERWISE INDICATED.
     - 8.3.4. PRIME COAT SHALL BE PLACED ON ALL LIMEROCK BASES IN ACCORDANCE WITH (FDOT) STANDARDS.
     - 8.3.5. TACK COAT SHALL BE PLACED AS REQUIRED IN ACCORDANCE WITH (FDOT) STANDARDS.
   - 8.4. TESTING
     - 8.4.1. ALL SUBGRADE, LIMEROCK AND ASPHALT TESTS REQUIRED SHALL BE TAKEN AT THE DIRECTION OF THE ENGINEER AND/OR THE OWNER/MUNICIPAL AUTHORITY.
   - 8.5. PAVERS
     - 8.5.1. ALL PAVER MATERIAL, INSTALLATION AND MAINTENANCE SPECIFICATIONS SHALL MEET THE REQUIREMENTS OF THE OWNER/MUNICIPAL AUTHORITY.
9. SIGNING AND MARKING
   - 9.1. ALL PAVEMENT MARKINGS WITHIN PUBLIC RIGHT-OF-WAYS SHALL BE ALKYD E
   - 9.2. ALL EXISTING PAVEMENT MARKINGS IN CONFLICT WITH PROPOSED DESIGN SH TO BE APPROVED BY COUNTY AND/OR MUNICIPAL TRAFFIC ENGINEERING DEP/
   - 9.3. ALL TEMPORARY PAVEMENT MARKINGS WITHIN PUBLIC RIGHT-OF-WAYS SHAL AND/OR MUNICIPAL TRAFFIC ENGINEERING DEPARTMENT MINIMUM STANDARD FINAL LIFT WHICH SHALL BE FOIL BACK TAPE OR PAPER TAPE.
   - 9.4. ALL SIGNING, PAVEMENT MARKINGS, REFLECTIVE PAVEMENT MARKERS & GEC MUNICIPAL/COUNTY STANDARDS, AND THE MANUAL ON UNIFORM TRAFFIC CON HIGHWAYS.
   - 9.5. STOP BARS ARE TO BE LOCATED 4' TYPICAL BEHIND PEDESTRIAN CROSSWALK FROM THROUGH LANE EDGE OF PAVEMENT.
   - 9.6. ALL SIGN PLACEMENT TO BE OUTSIDE OF MIN. CLEAR ZONE REQUIREMENTS (F
   - 9.7. SIGN SUPPORTS SHOULD NOT BE PLACED IN THE BOTTOM OF SWALE AREAS W SUPPORTS.
   - 9.8. ALL EXISTING RUMBLE STRIP SETS TO BE REMOVED AND RECONSTRUCTED AS SHOWN AND PER FDOT INDEX 546.
   - 9.9. RMP'S SHALL BE CLASS "B" OR EQUIVALENT, APPLIED WITH EPOXY OR BITUMINOUS ADHESIVE.
   - 9.10. CONTRACTOR SHALL CONTACT COUNTY/MUNICIPAL TRAFFIC DIVISION FORTY EIGHT (48) HOURS PRIOR TO CONSTRUCTION IF WORK IS BEING DONE WITHIN 10 FEET OF ANY SIGNAL EQUIPMENT.
   - 9.11. DAMAGES TO LOOPS OR ANY SIGNAL EQUIPMENT CAUSED BY CONSTRUCTION W/ THIS PROJECT MUST BE REPAIRED OR REPLACED TO ORIGINAL OR BETTER CONDITION BY CONTRACTOR AT NO COST TO OWNER.
   - 9.12. METHODS FOR REMOVAL OF EXISTING PAVEMENT MARKINGS SHALL BE BY SAND OR WATER BLASTING PER MUNICIPAL/COUNTY TRAFFIC DIVISION STANDARDS.
10. FDEP GENERAL WATER NOTES
    - 10.1. ALL PIPE, PIPE FITTINGS, PIPE JOINT PACKING AND JOINTING MATERIALS, VALVES, FIRE HYDRANTS AND METERS INSTALLED SHALL CONFORM TO APPLICABLE AMERICAN WATER WORKS ASSOCIATION (AWWA) STANDARDS.
    - 10.2. ALL PUBLIC WATER SYSTEM COMPONENTS, EXCLUDING FIRE HYDRANTS, THAT WILL COME INTO CONTACT WITH DRINKING WATER SHALL CONFORM TO NST INTERNATIONAL STANDARD 61 AS ADOPTED IN RULE 62-555.335, F.A.C., OR OTHER APPLICABLE STANDARDS, REGULATION OR REQUIREMENTS REFERENCED IN PARAGRAPH 62-333.320(3)(b), F.A.C.
    - 10.3. ALL PIPE AND PIPE FITTINGS INSTALLED UNDER THIS PROJECT WILL BE COLOR CODED OR MARKED IN ACCORDANCE WITH SUBPARAGRAPH 62-555.320(21)(B)3, F.A.C., USING BLUE AS A PREDOMINANT COLOR. (UNDERGROUND PLASTIC PIPE WILL BE SOLID-WALL BLUE PIPE, WILL HAVE A CO-EXTRUDED BLUE EXTERNAL SKIN, OR WILL BE WHITE OR BLACK PIPE WITH BLUE STRIPES INCORPORATED INTO, OR APPLIED TO, THE PIPE WALL; AND UNDERGROUND METAL OR CONCRETE PIPE WILL HAVE BLUE STRIPES APPLIED TO THE PIPE WALL. PIPE STRIPED DURING MANUFACTURING OF THE PIPE WILL HAVE CONTINUOUS STRIPES THAT RUN PARALLEL TO THE AXIS OF THE PIPE, THAT ARE LOCATED AT NO GREATER THAN 90-DEGREE INTERVALS AROUND THE PIPE, AND THAT WILL REMAIN INTACT DURING AND AFTER INSTALLATION OF THE PIPE. IF TAPE OR PAINT IS USED TO STRIPE PIPE DURING INSTALLATION OF THE PIPE, THE TAPE OR PAINT WILL BE APPLIED IN A CONTINUOUS LINE THAT RUNS PARALLEL TO THE AXIS OF THE PIPE AND THAT IS LOCATED ALONG THE TOP OF THE PIPE; FOR PIPE WITH AN INTERNAL DIAMETER OF 24 INCHES OR GREATER, TAPE OR PAINT WILL BE APPLIED IN CONTINUOUS LINES ALONG EACH SIDE OF THE PIPE AS WELL AS ALONG THE TOP OF THE PIPE. ABOVEGROUND PIPE WILL BE PAINTED BLUE OR WILL BE COLOR CODED OR MARKED LIKE UNDERGROUND PIPE.)
    - 10.4. NEW OR ALTERED WATER MAINS THAT ARE INCLUDED IN THIS PROJECT AND THAT WILL BE CONSTRUCTED OF ASBESTOS-CEMENT OR POLYVINYL CHLORIDE PIPE WILL BE PRESSURE AND LEAKAGE TESTED IN ACCORDANCE WITH AWWA STANDARD C603 OR C605, RESPECTIVELY, AS INCORPORATED INTO RULE 62-555.330, F.A.C., AND ALL OTHER NEW OR ALTERED WATER MAINS INCLUDED IN THIS PROJECT WILL BE PRESSURE AND LEAKAGE TESTED IN ACCORDANCE WITH AWWA STANDARD C600 AS INCORPORATED INTO RULE 62-555.330.
11. LANDSCAPE NOTES
    - 11.1. ALL CONSTRUCTION ACTIVITY, INCLUDING TRENCHING, IS TO BE A MINIMUM OF SIX FEET FROM THE BASE OF ANY TREE THAT IS DESIGNATED TO REMAIN.
    - 11.2. ALL TREES PLANTED IN ISLANDS CONTAINING HYDRANTS OR FDC'S MUST COMPLY WITH FLORIDA FIRE PREVENTION CODE 18.3.4.1 - CLEARANCES OF 7'-6" IN FRONT OF AND TO THE SIDES OF THE FIRE HYDRANT, WITH A 4' CLEARANCE TO THE REAR OF THE HYDRANT.
    - 11.3. METERS SHALL HAVE AT LEAST 3' OF UNOBSTRUCTED ACCESS TO AND VIEW OF THE MANHOLE OR METER FROM THE PUBLIC RIGHT-OF-WAY AND AT LEAST 5' OF VERTICAL CLEARANCE ABOVE THE MANHOLE OR METER PIT.
    - 11.4. ALL LIMEROCK AND BASE MATERIALS SHALL BE REMOVED FROM THE PLANTER AREAS/ISLANDS AND REPLACED WITH APPROPRIATE PLANTING SOIL PRIOR TO THE LANDSCAPING OF THE SITE.
    - 11.5. THE REMOVAL OF ANY TREE ON THE SITE IS PROHIBITED WITHOUT THE REQUIRED MUNICIPAL / COUNTY / STATE PERMIT.
    - 11.6. ROOT PRUNING OF TREES AFFECTED BY THE CONSTRUCTION SHALL BE DONE BY AN ISA CERTIFIED ARBORIST.
12. FDEP GENERAL SEWER NOTES
    - 12.1. APPROPRIATE DEFLECTION TESTS ARE SPECIFIED FOR ALL FLEXIBLE PIPE. TESTING IS REQUIRED AFTER THE FINAL BACKFILL HAS BEEN IN PLACED AT LEAST 30 DAYS TO PERMIT STABILIZATION OF THE SOIL-PIPE SYSTEM. TESTING REQUIREMENTS SPECIFY: 1) NO PIPE SHALL EXCEED A DEFLECTION OF 5%; 2) USING A RIGID BALL OR MANDREL FOR THE DEFLECTION TEST WITH A DIAMETER NOT LESS THAN 95% OF THE BASE INSIDE DIAMETER OR AVERAGE INSIDE DIAMETER OF THE PIPE, DEPENDING ON WHICH IS SPECIFIED IN THE ASTM SPECIFICATION, INCLUDING THE APPENDIX, TO WHICH THE PIPE IS MANUFACTURED; AND 3) PERFORMING THE TEXT WITHOUT MECHANICAL PULLING DEVICES.
    - 12.2. LEAKAGE TESTS ARE SPECIFIED REQUIRING THAT: 1) THE LEAKAGE EXFILTRATION OR INFILTRATION DOES NOT EXCEED 100 GALLONS PER INCH OF PIPE DIAMETER PER MILE PER DAY FOR ANY SECTION OF THE SYSTEM; 2) EXFILTRATION OR INFILTRATION TEST BE PERFORMED WITH A MINIMUM POSITIVE HEAD OF 2 FEET; AND 3) AIR TESTS, AS A MINIMUM, CONFORM TO THE TEST PROCEDURE DESCRIBED IN ASTM C924 FOR CONCRETE PIPE, ASTM F-1417 FOR PLASTIC PIPE, AND FOR OTHER MATERIALS APPROPRIATE TEST PROCEDURES.
    - 12.3. DESIGN REQUIRES THAT A BENCH BE PROVIDED ON EACH SIDE OF ANY MANHOLE CHANNEL WHEN THE PIPE DIAMETER(S) ARE LESS THAT THE MANHOLE DIAMETER AND THAT NO LATERAL SEWER, SERVICE CONNECTION, OR DROP MANHOLE PIPE DISCHARGES ONTO THE SURFACE OF THE BENCH.
    - 12.4. DESIGN REQUIRES: 1) MANHOLE LIFT HOLES AND GRADE ADJUSTMENT RINGS BE SEALED WITH NON-SHRINK MORTAR OR OTHER APPROPRIATE MATERIAL; 2) INLET AND OUTLET PIPES BE JOINED TO THE MANHOLE WITH A GASKETED FLEXIBLE WATERTIGHT CONNECTION OR ANOTHER WATERTIGHT CONNECTION ARRANGEMENT THAT ALLOWS DIFFERENTIAL SETTLEMENT OF THE PIPE AND MANHOLE WALL; AND 3) WATERTIGHT MANHOLE COVERS BE USED WHEREVER THE MANHOLE TOPS MAY BE FLOODED BY STREET RUNOFF OR HIGH WATER.
    - 12.5. MANHOLE INSPECTION AND TESTING FOR WATERTIGHTNESS OR DAMAGE PRIOR TO PLACING INTO SERVICE ARE SPECIFIED. AIR TESTING, IF SPECIFIED FOR CONCRETE SEWER MANHOLES, CONFORMS TO THE TEST PROCEDURES DESCRIBED IN ASTM C-1244.
    - 12.6. SUITABLE COUPLINGS APPROVED BY THE ENGINEER AND COMPLYING WITH ASTM SPECIFICATIONS ARE REQUIRED FOR JOINING DISSIMILAR MATERIALS.

VERTICAL DATUM INFORMATION
ALL ELEVATIONS SHOWN ARE IN NORTH AMERICAN VERTICAL DATUM OF 1988 (NAVD88)

Sunshine 811
Call 811 or visit sunshine811.com two full business days before digging to have buried facilities located and marked.
Check positive response codes before you dig!

BID SET

cma
chen moore and associates
500 West Cypress Creek Road
Suite 600
Ft. Lauderdale, FL 33309
954.730.0707
www.chenmoore.com

REGISTRATION
DAVID EDGARDO CASTRO FELIU, PE
LICENSE NO. 85558
DATE: 11/08/24

DAVID EDGARDO CASTRO FELIU
LICENSE
No. 85558
STATE OF FLORIDA
PROFESSIONAL ENGINEER

THIS SEAL IS ONLY VALID ON PRINTED COPIES THAT ARE DATED WITH THE LICENSEE'S ORIGINAL HAND SIGNATURE. SCANNED OR ELECTRONIC COPIES ARE NOT CONSIDERED SIGNED AND SEALED.

CLIENT
pompano beach
Florida's Warmest Welcome
CITY OF POMPANO BEACH
100 WEST ATLANTIC BOULEVARD
POMPANO BEACH, FL 33060
Phone: 954.786.4600

PROJECT INFORMATION
NON SEWER AREA C SANITARY SEWER IMPROVEMENTS
POMPANO BEACH, FL

PROJECT NUMBER
23-0092.00085

CLIENT PROJECT NUMBER
P331425

VERIFY SCALES
0 — 1"
IF NOT ONE INCH ON THIS SHEET, ADJUST SCALES ACCORDINGLY

REVISIONS

DATE OF ISSUE
11/08/24

DESIGNED BY
DC

DRAWN BY
JT

CHECKED BY
DC

DRAWING TITLE
GENERAL NOTES

DRAWING NUMBER
GN-1
02 OF 43

Plot Date: 11/16/2024 12:09:55 AM Username: jspicer Layout Name: GN-1
Folder Path: V:\Projects\2023\23-0092.00085 - area c sanitary sewer design services\Design\CAD\Sheets Filename: 23-0092.00085 General Notes.dwg

1. FLORIDA DEPT OF HEALTH COLOR CODING REQUIREMENTS FOR POTABLE WATER MAINS

ALL WATER MAIN PIPE, INCLUDING FITTINGS, INSTALLED ON OR AFTER AUGUST 28, 2003, EXCEPT PIPE INSTALLED UNDER A CONSTRUCTION PERMIT FOR WHICH THE HEALTH DEPARTMENT RECEIVED A COMPLETE APPLICATION BEFORE AUGUST 28, 2003, SHALL BE COLOR CODED OR MARKED USING BLUE AS A PREDOMINANT COLOR TO DIFFERENTIATE DRINKING WATER FROM RECLAIMED OR OTHER WATER. UNDERGROUND PLASTIC PIPE SHALL BE SOLID-WALL BLUE PIPE, SHALL HAVE A CO-EXTRUDED BLUE EXTERNAL SKIN, OR SHALL BE WHITE OR BLACK PIPE WITH BLUE STRIPES INCORPORATED INTO, OR APPLIED TO, THE PIPE WALL; AND UNDERGROUND METAL OR CONCRETE PIPE SHALL HAVE BLUE STRIPES APPLIED TO THE PIPE WALL. PIPE STRIPED DURING MANUFACTURING OF THE PIPE SHALL HAVE CONTINUOUS STRIPES THAT RUN PARALLEL TO THE AXIS OF THE PIPE, THAT ARE LOCATED AT NO GREATER THAN 90-DEGREE INTERVALS AROUND THE PIPE, AND THAT WILL REMAIN INTACT DURING AND AFTER INSTALLATION OF THE PIPE. IF TAPE OR PAINT IS USED TO STRIP PIPE DURING INSTALLATION OF THE PIPE, THE TAPE OR PAINT SHALL BE APPLIED IN A CONTINUOUS LINE THAT RUNS PARALLEL TO THE AXIS OF THE PIPE AND THAT IS LOCATED ALONG THE TOP OF THE PIPE; FOR PIPES WITH AN INTERNAL DIAMETER OF 24 INCHES OR GREATER, TAPE OR PAINT SHALL BE APPLIED IN CONTINUOUS LINES ALONG EACH SIDE OF THE PIPE AS WELL AS ALONG THE TOP OF THE PIPE. ABOVEGROUND PIPE AT DRINKING WATER TREATMENT PLANTS SHALL BE COLOR CODED AND LABELED IN ACCORDANCE WITH SUBSECTION 62-555.320(10), F.A.C., AND ALL OTHER ABOVEGROUND PIPE SHALL BE PAINTED BLUE OR SHALL BE COLOR CODED OR MARKED LIKE UNDERGROUND PIPE.

SUBSECTION 62-555.320(10), F.A.C READS AS FOLLOWS:

IF COLOR CODING OF PIPING AT DRINKING WATER TREATMENT PLANTS: ALL NEW OR ALTERED, ABOVEGROUND PIPING AT DRINKING WATER TREATMENT PLANTS SHALL BE COLOR CODED AND LABELED AS RECOMMENDED IN SECTION 2.14 OF RECOMMENDED STANDARDS FOR WATER WORKS AS INCORPORATED INTO RULE 62-555.330, F.A.C. IN ADDITION, ALL UNDERGROUND WATER MAIN PIPE THAT IS INSTALLED AT DRINKING WATER TREATMENT PLANTS ON OR AFTER AUGUST 28, 2003, AND THAT IS CONVEYING FINISHED DRINKING WATER SHALL BE COLOR CODED AS REQUIRED UNDER SUBPARAGRAPH 62-555.320(21)(B)3., F.A.C. THIS SUBSECTION DOES NOT APPLY TO DRINKING WATER TREATMENT PLAN PIPING INSTALLED OR ALTERED UNDER A CONSTRUCTION PERMIT FOR WHICH THE DEPARTMENT RECEIVED A COMPLETE APPLICATION BEFORE AUGUST 28, 2003.

2. GENERAL NOTES WATER AND SEWER

2.1. ALL APPLICABLE PERMITS MUST BE OBTAINED AND ALL APPLICABLE FEES AND CHARGES MUST BE PAID PRIOR TO COMMENCEMENT OF CONSTRUCTION.

2.2. A PRE-CONSTRUCTION MEETING SHALL BE HELD WITH THE OWNER/MUNICIPAL AUTHORITY ATTENDED BY THE CONTRACTOR, ENGINEER AND OTHER INTERESTED PARTIES PRIOR TO COMMENCEMENT OF CONSTRUCTION.

2.3. THE CONTRACTOR SHALL MAINTAIN AT ALL TIMES ON THE SITE A CURRENT SET OF APPROVED CONSTRUCTION PLANS. THE PLANS SHALL BE MADE AVAILABLE TO THE MUNICIPALITY'S ENGINEER OR HIS DESIGNEE UPON REQUEST.

2.4. THE CONTRACTOR SHALL FIELD VERIFY THE LOCATIONS OF ALL EXISTING UTILITIES SHOWN ON THE APPROVED PLANS. APPROVAL OF PLANS BY THE MUNICIPALITY IN NO WAY IMPLIES VERIFICATION OF THE ACCURACY OF THOSE PLANS OR FEATURES DEPICTED THEREON. THE OWNER'S ENGINEER SHALL BRING TO THE ATTENTION OF THE MUNICIPALITY'S ENGINEER ANY DISCREPANCY IN, OR VARIATION FROM, THE APPROVED PLANS. THE CONTRACTOR SHALL BE RESPONSIBLE FOR THE PROTECTION OF EXISTING AND NEWLY INSTALLED UTILITIES AND IMPROVEMENTS FROM DAMAGE, DISRUPTION OF SERVICE, OR DESTRUCTION AT ALL TIMES THROUGHOUT THE DURATION OF CONSTRUCTION. THE CONTRACTOR SHALL BE RESPONSIBLE FOR TAKING SUCH MEASURES AS NECESSARY TO PROTECT THE HEALTH, SAFETY AND WELFARE OF THOSE PERSONS HAVING ACCESS TO THE WORK SITE. THE CONTRACTOR SHALL TAKE THE NECESSARY PRECAUTIONS TO SAFEGUARD ALL EXISTING STRUCTURES AND UTILITIES. ADDITIONAL UTILITIES MAY EXIST WHICH ARE NOT SHOWN ON THE PLANS. ANY AND ALL CONFLICTS WITH EXISTING UTILITIES SHALL BE REPORTED TO THE ENGINEER.

2.5. THE CONTRACTOR SHALL INFORM THE MUNICIPALITY'S ENGINEER AT LEAST 48 HOURS IN ADVANCE OF COMMENCING CONSTRUCTION AND/OR CONNECTING TO A MUNICIPAL FACILITY.

2.6. THE CONTRACTOR SHALL BE RESPONSIBLE FOR THE SCHEDULING OF, AND PAYMENT FOR, SUCH TESTS AS MAY BE DEEMED NECESSARY BY THE OWNER'S ENGINEER OR THE MUNICIPAL ENGINEER, AND AS CALLED FOR IN THE PLANS AND SPECIFICATIONS.

2.7. THE OWNER'S ENGINEER SHALL MAKE SUFFICIENT INSPECTIONS OF THE WORK TO ENABLE HIM TO CERTIFY THE INSTALLATION AS BEING IN CONFORMANCE WITH THE APPLICABLE STANDARDS AND SPECIFICATIONS.

2.8. THE OWNER'S REPRESENTATIVE WILL INFORM THE CONTRACTOR WHEN TO BACK FILL THE WORK, AND WILL WITNESS ALL PRESSURE, BACTERIOLOGICAL AND INFILTRATION/EXFILTRATION TESTS.

2.9. NEW OR RELOCATED, UNDERGROUND WATER MAINS INCLUDED IN THIS PROJECT WILL BE LAID TO PROVIDE A HORIZONTAL DISTANCE OF AT LEAST THREE FEET (10 FEET PREFERRED) BETWEEN THE OUTSIDE OF THE WATER MAIN AND THE OUTSIDE OF ANY EXISTING OR PROPOSED VACUUM TYPE SANITARY SEWER, STORM SEWER, STORMWATER FORCE MAIN, OR PIPELINE CONVEYING RECLAIMED WATER REGULATED UNDER PART III OF CHAPTER 62-610, F.A.C.; A HORIZONTAL DISTANCE OF AT LEAST SIX FEET (10 FEET PREFERRED) BETWEEN THE OUTSIDE OF THE WATER MAIN AND THE OUTSIDE OF ANY EXISTING OR PROPOSED GRAVITY-TYPE SANITARY SEWER (OR A HORIZONTAL DISTANCE OF AT LEAST THREE FEET BETWEEN THE OUTSIDE OF THE WATER MAIN AND THE OUTSIDE OF ANY EXISTING OR PROPOSED GRAVITY TYPE SANITARY SEWER IF THE BOTTOM OF THE WATER MAIN WILL BE LAID AT LEAST SIX INCHES ABOVE THE TOP OF THE SEWER); A HORIZONTAL DISTANCE OF AT LEAST SIX FEET (10 FEET PREFERRED) BETWEEN THE OUTSIDE OF THE WATER MAIN AND THE OUTSIDE OF ANY EXISTING OR PROPOSED PRESSURE-TYPE SANITARY SEWER, WASTEWATER FORCE MAIN, OR PIPELINE CONVEYING RECLAIMED WATER NOT REGULATED UNDER PART III OF CHAPTER 62-610, F.A.C.; AND A HORIZONTAL DISTANCE OF AT LEAST TEN FEET BETWEEN THE OUTSIDE OF THE WATER MAIN AND ALL PARTS OF ANY EXISTING OR PROPOSED "ON-SITE SEWAGE TREATMENT AND DISPOSAL SYSTEM." AT THE UTILITY CROSSINGS DESCRIBED ABOVE, ONE FULL LENGTH OF WATER MAIN PIPE WILL BE CENTERED ABOVE OR BELOW THE OTHER PIPELINE SO THE WATER MAIN JOINTS WILL BE AS FAR AS POSSIBLE FROM THE OTHER PIPELINE OR THE PIPES WILL BE ARRANGED SO THAT ALL WATER MAIN JOINTS ARE AT LEAST THREE FEET FROM ALL JOINTS IN VACUUM-TYPE SANITARY SEWERS, STORM SEWERS, STORMWATER FORCE MAINS, OR PIPELINES CONVEYING RECLAIMED WATER REGULATED UNDER PART III OF CHAPTER 62-610, F.A.C., AND AT LEAST SIX FEET FROM ALL JOINTS IN GRAVITY- OR PRESSURE-TYPE SANITARY SEWERS, WASTEWATER FORCE MAINS, OR PIPELINES CONVEYING RECLAIMED WATER NOT REGULATED UNDER PART III OF CHAPTER 62-610, F.A.C.

2.10. NEW OR RELOCATED, UNDERGROUND WATER MAINS THAT ARE INCLUDED IN THIS PROJECT AND THAT WILL CROSS ANY EXISTING OR PROPOSED GRAVITY- OR VACUUM-TYPE SANITARY SEWER OR STORM SEWER WILL BE LAID SO THE OUTSIDE OF THE WATER MAIN IS AT LEAST SIX INCHES (12 INCHES PREFERRED) ABOVE THE OTHER PIPELINE OR AT LEAST 12 INCHES BELOW THE OTHER PIPELINE; AND NEW OR RELOCATED, UNDERGROUND WATER MAINS THAT ARE INCLUDED IN THIS PROJECT AND THAT WILL CROSS ANY EXISTING OR PROPOSED PRESSURE TYPE SANITARY SEWER, WASTEWATER OR STORMWATER FORCE MAIN, OR PIPELINE CONVEYING RECLAIMED WATER WILL BE LAID SO THE OUTSIDE OF THE WATER MAIN IS AT LEAST 12 INCHES ABOVE OR BELOW THE OTHER PIPELINE.

2.11. NO DEVIATION FROM APPROVED PLANS SHALL BE PERMITTED WITHOUT THE WRITTEN CONSENT OF THE MUNICIPAL ENGINEER.

2.12. CONTRACTOR SHALL BE RESPONSIBLE FOR COORDINATING THESE PLANS WITH ANY PAVING AND DRAINAGE PLANS IN THIS PROJECT WORK AREA.

2.13. ALL INSTALLATIONS WITHIN THE COUNTY RIGHT-OF-WAY SHALL BE IN CONFORMITY WITH THE COUNTY ENGINEERING DIVISION "MINIMUM STANDARDS".

2.14. ALL INSTALLATIONS AND TESTING OF DUCTILE IRON PIPE SHALL COMPLY WITH ANSI/AWWA C-600-99 (OR CURRENT EDITION).

2.15. COATINGS AND LININGS (DIP):

2.15.1. DUCTILE IRON PIPE AND FITTINGS FOR UNDERGROUND SERVICE SHALL RECEIVE AN EXTERIOR BITUMINOUS COATING OF COAL TAR VARNISH OR ASPHALT BASE PAINT, 1.0-MIL FILM THICKNESS IN ACCORDANCE WITH ANSI/AWWA A21.51/C-151.

2.15.2. EXPOSED DUCTILE IRON PIPE AND FITTINGS FOR SERVICE SHALL RECEIVE A FACTORY APPLIED EXTERIOR COATING OF UNIVERSAL RUST-INHIBITIVE PRIMER, 2.0 MILS DRY FILM THICKNESS.

2.15.3. DUCTILE IRON PIPE AND FITTINGS FOR WASTEWATER SERVICE SHALL RECEIVE A FACTORY APPLIED INTERIOR CERAMIC EPOXY COATING WITH A MINIMUM DRY THICKNESS OF 40 MILS IN ACCORDANCE WITH ANSI A21.4. PROTECTO 401 OR APPROVED EQUAL.

2.15.4. DUCTILE IRON PIPE AND FITTINGS FOR WATER AND REUSE SERVICE SHALL RECEIVE AN EXTERIOR COATING AS SPECIFIED ABOVE AND SHALL BE CEMENT MORTAR LINED AND BITUMINOUS SEALED IN ACCORDANCE WITH ANSI A21.4.

2.16. WASTEWATER APPLICATIONS:

2.16.1. PVC

2.16.1.1. FOR GRAVITY SEWER ONLY SDR 26 PVC OR

2.16.2. DIP

2.16.2.1. PRESSURE CLASS 350 FOR 4"-24" DIAMETER PIPE

2.16.2.2. PRESSURE CLASS 250 FOR 30" OR GREATER DIAMETER PIPE

2.16.2.3. CLASS 53 FOR FLANGED APPLICATIONS

2.17. FORCE MAINS SHALL BE TESTED IN ACCORDANCE WITH AWWA STANDARD C-600 LATEST REVISION. THE COMPLETE SYSTEM SHALL BE HYDROSTATICALLY TESTED UNDER A MINIMUM CONSTANT PRESSURE OF 150 PSI, FOR A MINIMUM OF 2 HOURS. A LEAKAGE TEST SHALL BE PERFORMED AT THE ABOVE MENTIONED PRESSURE UNTIL THE LEAKAGE IS LESS THAN THE NUMBER OF GALLONS PER HOUR AS DETERMINED BY THE FORMULA.

$$L = \frac{SD\,P^{1/2}}{148{,}000}$$

WHERE: L = ALLOWABLE LEAKAGE IN GPH
D = NOMINAL PIPE DIAMETER IN INCHES
S = LENGTH OF PIPE IN FEET BEING TESTED
P = AVERAGE TEST PRESSURE IN PSI

NOTE: THE SECTION OF MAIN BEING TESTED SHALL BE LIMITED TO A MAXIMUM LENGTH OF 2000'.

3. WATER SYSTEM NOTES

3.1. ALL WATER MAINS LARGER THAN 12" SHALL BE DUCTILE IRON PIPE (DIP). ALL PIPE MATERIAL SHALL BE APPROVED BY THE ENGINEER AND SHALL MEET THE FOLLOWING MINIMUM REQUIREMENTS:

3.1.1. PVC (NOT ALLOWED)

3.1.1.1. 4" AND 6" DIA, CLASS 150, DR18

3.1.1.2. 8" TO 12" DIA, CLASS 150, DR18 ANSI/AWWA C900-07 OR DIP

3.1.2. DIP

3.1.2.1. ANSI/AWWA C151/A21.51 - 02 AND CEMENT MORTAR LINED AND SEALED PER ANSI/AWWA C104/A21.4-02

3.1.2.2. PRESSURE CLASS 350 FOR 4"-24" DIAMETER PIPE

3.1.2.3. PRESSURE CLASS 250 FOR 30" OR GREATER DIAMETER PIPE

3.1.2.4. CLASS 53 FOR FLANGED APPLICATIONS

3.2. ALL DUCTILE IRON PIPE WATER MAINS SHALL BE INSTALLED WITH A MINIMUM CLEAR COVER OF 30 INCHES. ALL PVC WATER MAINS SHALL BE INSTALLED WITH MINIMUM CLEAR COVER OF 36 INCHES UNLESS OTHERWISE INDICATED IN PLANS.

3.3. ALL TRENCHING, PIPE-LAYING, BACKFILL, PRESSURE TESTING AND DISINFECTING MUST COMPLY WITH THE MUNICIPAL/COUNTY AUTHORITY MINIMUM CONSTRUCTION REQUIREMENTS.

3.4. ALL FITTINGS SHALL BE CAST IRON OR DUCTILE IRON MEETING ANSI/AWWA C-153/A21.53 SPECIFICATIONS, WITH 350 PSI MINIMUM WORKING PRESSURE (3"-24"Ø PIPES). FITTINGS MUST BE CEMENT LINED AND SEAL COATED PER ANSI/AWWA C151/A21.51-02 AND C-104/A21.4-03.

3.5. MEG-A-LUG OR APPROVED EQUAL RESTRAINED JOINT CONSTRUCTION, SHALL BE USED TO MINIMIZE OR ELIMINATE THRUST BLOCKS.

3.6. GATE VALVES 4 INCH AND LARGER SHALL BE RESILIENT SEAT AND SHALL MEET ANSI/AWWA C-509-01 SPECIFICATIONS (LATEST REVISION). VALVES SHALL BE MUELLER OR APPROVED EQUAL.

3.7. MIN. VALVE SPACING SHALL BE AS PER SECTION 8 OF THE RECOMMENDED STANDARDS FOR WATER WORKS (TEN STATE STANDARDS), LATEST EDITION.

3.8. FIRE HYDRANTS SHALL BE AS REQUIRED BY THE MUNICIPAL AUTHORITY AND AT A MINIMUM SHALL BE TRAFFIC BREAKAWAY TYPE MUELLER CO. CENTURION MODEL NO. A-423 OR APPROVED EQUAL AND SHALL BE INSTALLED WITH THE CENTER OF THE HOSE NOZZLE 18" ABOVE FINISHED GRADE OR AS DIRECTED BY ENGINEER.

3.9. CONTRACTOR SHALL SUBMIT REQUIRED NUMBER OF COPIES AS REQUESTED BY THE ENGINEER OF THE PROPOSED MATERIALS.

3.9.1. PIPE AND FITTINGS

3.9.2. VALVES

3.9.3. FIRE HYDRANTS

3.9.4. CURB AND CORP. STOPS

3.9.5. WATER SERVICE TUBING

3.9.6. U BRANCHES

3.9.7. WATER SERVICE CASING

3.9.8. ALL OTHERS AS REQUESTED BY THE ENGINEER OR THE OWNER.

3.10. WHEN PVC PIPE IS USED FOR WATER MAINS, A 14-GAUGE MULTISTRAND COPPER WIRE OR APPROVED EQUAL MATERIAL SHALL BE INSTALLED CONTINUOUSLY ALONG THE LENGTH OF THE PIPE. THE WIRE SHALL BE BROUGHT UP AND A MINIMUM OF FOUR FEET OF EXCESS WIRE SHALL BE COILED AT EACH VALVE. A GREEN LOCATOR (MODEL NO. 1253 AS MANUFACTURED BY AUTOMATION PRODUCTS CO.) OR APPROVED EQUAL SHALL BE INSTALLED AT EVERY WATER SERVICE.

3.11. THE COMPLETE WATER SYSTEM SHALL BE HYDROSTATICALLY TESTED UNDER A MINIMUM CONSTANT PRESSURE OF 150 PSI FOR A MINIMUM 2 HOURS TEST AND SHALL NOT EXCEED THE LEAKAGE REQUIREMENTS AS PER ANSI/AWWA SPECIFICATIONS OF C600-05 IN ACCORDANCE WITH THE FOLLOWING LEAKAGE FORMULA:

$$L = \frac{SD\,P^{1/2}}{148{,}000}$$

WHERE: L = ALLOWABLE LEAKAGE IN GPH
D = NOMINAL PIPE DIAMETER IN INCHES
S = LENGTH OF PIPE IN FEET BEING TESTED
P = AVERAGE TEST PRESSURE IN PSI

NOTE: THE SECTION OF MAIN BEING TESTED SHALL BE LIMITED TO A MAXIMUM LENGTH OF 2000'. NO ALLOWABLE LEAKAGE SHALL BE PERMITTED FOR FIRE HYDRANTS.

3.12 DISINFECTION OF WATER MAINS SHALL COMPLY WITH ANSI/AWWA C-651-05 STANDARD.

3.13 THE CONTRACTOR SHALL SUPPLY AND INSTALL APPROVED REFLECTIVE MARKERS IN THE STREET DRIVING LANE ADJACENT TO ALL FIRE HYDRANTS. COLOR AND LOCATION SHALL BE DIRECTED BY THE ENGINEER.

3.14 PAVEMENT RESTORATION SHALL BE CARRIED OUT IN ACCORDANCE WITH THE REQUIREMENTS OF THE AUTHORITY HAVING JURISDICTION.

3.15 ALL WATER MAIN INSTALLATIONS SHALL COMPLY WITH THE COLOR CODING REQUIREMENTS OF CHAPTER 62-555.320, FAC.

3.16 RESTRAINED JOINT PIPE SHALL BE USED FOR ALL BENDS, TEES, CROSSES, PLUGS AND FIRE HYDRANTS PER THE STANDARD DETAILS AND MUNICIPAL UTILITY REQUIREMENTS.

4. FIRE SAFETY NOTES

4.1. ALL FIRE HYDRANTS SHALL COMPLY WITH THE FOLLOWING INSTALLATION CRITERIA:

4.1.1. FIRE HYDRANTS SHALL BE LOCATED 5' MIN. FROM EDGE OF PAYMENT WITH RAISED CURBING

4.1.2. BOLLARDS MAY BE REQUIRED FOR FIRE HYDRANTS WITH LESS THAN 7FT TO EDGE OF PAYMENT (WITHOUT RAISED CURBING). NO BOLLARDS MAY BE INSTALLED IN CITY RIGHT OF WAY "CLEAR ZONE".

4.1.3. THE 5-1/4" OUTLET SHALL FACE THE ROADWAY.

4.1.4. UNOBSTRUCTED SPACE (7'-6" MIN. ALL SIDES AND 4' MIN. REAR) SHALL BE MAINTAINED AROUND THE CIRCUMFERENCE OF THE FIRE HYDRANT UNLESS OTHER WISE REQUIRED OR APPROVED BY THE FIRE CHIEF. LANDSCAPING SHALL NOT OBSCURE THE FIRE HYDRANT.

4.1.5. FIRE DEPARMENT SHALL APPROVE ALL FIRE HYDRANT LOCATIONS.

4.1.6. REFLECTORS IN THE ROADWAY TO INDICATE FIRE HYDRANT LOCATIONS SHALL BE PROVIDED AND INSTALLED AS DIRECTED BY THE ENGINEER.

4.1.7. MINIMUM WATER FLOW REQUIRED FOR FIRE HYDRANTS SHALL BE 1000 GPM OR AS REQUIRED BY THE MUNICIPAL AUTHORITY.

4.1.8. ALL F.H.'S ARE TO MEET MIN. CLEAR ZONE REQUIREMENTS PER FDOT FLORIDA GREEN BOOK LATEST EDITION.

5. STORM WATER POLLUTION PREVENTION PLAN (SWPPP) REQUIREMENTS

5.1. CONTRACTOR IS RESPONSIBLE FOR PREPARING SWPPP, SUBMITTING SWPPP TO FLORIDA DEPARTMENT OF ENVIRONMENTAL PROTECTION, IMPLEMENTING AND MAINTAINING SWPPP DURING CONSTRUCTION ACTIVITIES AND ABIDING BY SWPPP REQUIREMENTS UNTIL FINAL CERTIFICATION OF SITE CONSTRUCTION IS OBTAINED.

6. EARTHWORK NOTES

6.1. IT IS THE CONTRACTORS RESPONSIBILITY TO CALCULATE THE CUT/FILL VOLUMES FOR THE PROPOSED IMPROVEMENTS PRIOR TO BIDDING THE JOB.

7. SODDING REQUIREMENTS

7.1. ALL BERMS AND SWALES ARE TO BE SODDED TO MATCH EXISTING SOD TYPE.

7.2. SOD AREAS ADJACENT TO PAVEMENT HAVING RUNOFF TO SWALES SHALL BE GRADED 0.2' LOWER THAN PROPOSED EDGE OF PAVEMENT PLAN GRADES TO ALLOW FOR PLACEMENT OF SOD.

8. DEWATERING PERMIT

8.1. DEWATERING PERMIT IS NOT AVAILABLE FOR THE PROJECT DEVELOPMENT. IT IS THE CONTRACTORS RESPONSIBILITY TO OBTAIN A DEWATERING PERMIT

9. UNSUITABLE MATERIAL REMOVAL AND DISPOSAL

9.1. CONTRACTOR IS RESPONSIBLE FOR DETERMINATION/INVESTIGATION OF SUBSURFACE CONDITIONS. ALL UNSUITABLE MATERIAL SURFACE AND SUBSURFACE WITHIN AREAS OF CONSTRUCTION IS TO BE REMOVED AND DISPOSED OF IN ACCORDANCE WITH ALL APPLICABLE REGULATIONS. UNSUITABLE MATERIAL INCLUDES BUT IS NOT LIMITED TO: DEBRIS, ORGANICS/MUCK, AND PLASTIC MATERIAL. ALL UNSUITABLE MATERIAL REMOVED SHALL BE REPLACED WITH SUITABLE MATERIAL.

10. GEOTECHNICAL REQUIREMENTS

10.1. CONTRACTOR IS RESPONSIBLE FOR DETERMINATION/INVESTIGATION OF SUBSURFACE CONDITIONS.

11. DEMOLITION NOTES

11.1. PROPER SAFETY PRECAUTIONS SHALL BE TAKEN TO SEPARATE AREA OF DEMOLITION FROM SURROUNDING PROPERTY.

11.2. ALL ASPHALT AND CURB SHALL BE SAWCUT AT THE LIMITS OF DEMOLITION PRIOR TO REMOVAL.

11.3. ALL DEMOLITION TO BE PERFORMED IN A MANNER TO ELIMINATE HAZARDS TO PERSONS AND PROPERTY, MINIMIZE INTERFERENCE WITH USE OF ADJACENT AREAS, PROVIDE NON-DISRUPTION OF SERVICES PROVIDED BY EXISTING UTILITIES TO ADJACENT AREAS, AND TO PROVIDE FREE PASSAGE TO AND FROM ADJACENT AREAS OR STRUCTURES.

11.4. PRIOR TO AND DURING DEMOLITION, CONTRACTOR SHALL TAKE NECESSARY PRECAUTIONS TO AVOID DAMAGE TO EXISTING ITEMS TO REMAIN.

11.5. DEBRIS RESULTING FROM DEMOLITION SHALL BECOME THE PROPERTY OF CONTRACTOR AND SHALL BE PROPERLY DISPOSED OF ON A DAILY BASIS. DISPOSAL OF DEBRIS SHALL BE IN COMPLIANCE WITH APPLICABLE FEDERAL, STATE AND LOCAL PERMITS, RULES AND/OR REGULATIONS.

11.6. HAZARDOUS MATERIALS, IF PRESENT, SHALL BE DEALT WITH IN A MANNER CONSISTENT WITH FEDERAL, STATE AND LOCAL REGULATIONS.

11.7. UPON COMPLETION OF DEMOLITION, SITE IS TO BE LEFT IN CLEAN CONDITION FREE OF DEBRIS.

11.8. CONTRACTOR TO PROVIDE PROPER SEDIMENT CONTROL AND PROTECTION OF STORM WATER STRUCTURES, BOTH WITHIN AND OUTSIDE THE LIMITS OF DEMOLITION AND P/L, TO PREVENT DEPOSIT OF SEDIMENTS CONVEYED THROUGH RUNOFF. CONTRACTOR TO CLEAN AND REMOVE SEDIMENTS FROM ALL STRUCTURES AS NEEDED.

11.9. EXISTING UTILITIES INFORMATION IS PROVIDED FOR REFERENCE ONLY. CONTRACTOR IS RESPONSIBLE FOR IDENTIFYING ALL UTILITIES SHOWN OR NOT SHOWN PRIOR TO DEMOLITION. CONTRACTOR SHALL HAVE ALL UTILITIES PROPERLY LOCATED PRIOR TO COMMENCEMENT OF DEMOLITION.

11.10. BRICK AND GROUT ANY REMAINING HOLE OPENINGS IN EXISTING STRUCTURES AFTER REMOVAL OF ANY PIPE DESIGNATED FOR REMOVAL.

*THE STANDARD NOTES CONTAINED HEREON ARE GENERAL IN NATURE. FOR ANY CONTRADICTION BETWEEN THESE GENERAL NOTES AND THE UTILITY OWNERS STANDARD DETAILS AND NOTES, THE UTILITY OWNERS NOTES AND DETAILS GOVERN.

VERTICAL DATUM INFORMATION
ALL ELEVATIONS SHOWN ARE IN NORTH AMERICAN VERTICAL DATUM OF 1988 (NAVD88)

Sunshine811
Call 811 or visit sunshine811.com two full business days before digging to have buried facilities located and marked.
Check positive response codes before you dig!

BID SET

cma
chen moore and associates
500 West Cypress Creek Road
Suite 600
Ft. Lauderdale, FL 33309
954.730.0707
www.chenmoore.com

REGISTRATION
DAVID EDGARDO CASTRO FELIU, PE
LICENSE NO. 85558
DATE: 11/08/24

DAVID EDGARDO CASTRO FELIU
LICENSE
No. 85558
STATE OF FLORIDA
PROFESSIONAL ENGINEER

THIS SEAL IS ONLY VALID ON PRINTED COPIES THAT ARE DATED WITH THE LICENSEE'S ORIGINAL HAND SIGNATURE. SCANNED OR ELECTRONIC COPIES ARE NOT CONSIDERED SIGNED AND SEALED.

CLIENT
pompano beach
Florida's Warmest Welcome
CITY OF POMPANO BEACH
100 WEST ATLANTIC BOULEVARD
POMPANO BEACH, FL 33060
Phone: 954.786.4600

PROJECT INFORMATION

NON SEWER AREA
C SANITARY
SEWER
IMPROVEMENTS

POMPANO BEACH, FL

PROJECT NUMBER
23-0092.00085

CLIENT PROJECT NUMBER
P331425

VERIFY SCALES
0 1"
IF NOT ONE INCH ON THIS SHEET, ADJUST SCALES ACCORDINGLY

REVISIONS

DATE OF ISSUE
11/08/24

DESIGNED BY
DC

DRAWN BY
JT

CHECKED BY
DC

DRAWING TITLE

GENERAL NOTES

DRAWING NUMBER
GN-2
03 OF 43

Plot Date: 11/16/2024 12:09:59 AM Username: jspicer Layout Name: GN-2
Folder Path: V:\Projects\2023\23-0092.00085 - area c sanitary sewer design services\Design\CAD\Sheets Filename: 23-0092.00085 General Notes.dwg

HORIZONTAL DIRECTIONAL DRILLING (HDD) WITH (HDPE) PIPE

I. WORK INCLUDED

A. FURNISH ALL LABOR, MATERIALS AND EQUIPMENT REQUIRED TO INSTALL RAW WATER MAIN PIPE USING DIRECTIONAL DRILLING METHOD OF INSTALLATION, ALL IN ACCORDANCE WITH THE REQUIREMENTS OF THE CONTRACT DOCUMENTS. THE RAW WATER MAIN PIPE SIZE, TYPE AND LENGTH SHALL BE AS SPECIFIED HEREIN AND AS SHOWN ON THE DRAWINGS. WORK INCLUDED SHALL INCLUDE AND NOT BE LIMITED TO PROPER INSTALLATION, TESTING, RESTORATION OF UNDERGROUND UTILITIES AND ENVIRONMENTAL PROTECTION AND RESTORATION.

B. THE DIRECTIONAL DRILL SHALL BE ACCOMPLISHED BY FIRST DRILLING A PILOT HOLE TO DESIGN STANDARDS; THEN ENLARGING THE PILOT HOLE TO SUFFICIENT SIZE TO ACCOMMODATE THE PULL BACK.

II. REFERENCE SPECIFICATIONS, CODES AND STANDARDS

A. AMERICAN SOCIETY FOR TESTING AND MATERIALS (ASTM)

ASTM D 3261: BUTT HEAT FUSION POLYETHYLENE PLASTIC FITTINGS

ASTM F 714-05: SPECIFICATION FOR POLYETHYLENE PIPE

ASTM F 1055: ELECTRO-FUSION FITTINGS FOR OUTSIDE DIAMETER CONTROLLED PE PIPE

ASTM F 1962: MAXI-HORIZONTAL DIRECTIONAL DRILLING

ASTM F 2620: HEAT FUSION JOINING OF POLYETHYLENE PIPE AND FITTINGS

B. AMERICAN WATER WORKS ASSOCIATION (AWWA)

AWWA C 906: STANDARD FOR POLYETHYLENE PRESSURE PIPE AND FITTINGS, 4 IN. THROUGH 63 IN. FOR WATER DISTRIBUTION

III. GENERAL REQUIREMENTS

A. DIRECTIONAL DRILLING AND PIPE INSTALLATION SHALL BE DONE ONLY BY AN EXPERIENCED, LICENSED CONTRACTOR SPECIALIZING IN DIRECTIONAL DRILLING TECHNIQUE AND WHOSE KEY PERSONNEL HAVE AT LEAST FIVE (5) YEARS' EXPERIENCE IN THIS WORK. FURTHERMORE, THE SAID CONTRACTOR SHALL HAVE HAD EXPERIENCE IN DIRECTIONAL DRILLING UNDER FLORIDA WATERWAYS. ACCEPTABLE DIRECTIONAL DRILLING CONTRACTORS MUST MEET THESE MINIMUM QUALIFICATIONS PRESENTED IN DOCUMENTATION OF COMPLIANCE WITH MINIMUM STANDARDS IN SECTION 1.05 .A.2.

B. THE CONTRACTOR SHALL VISIT THE SITE AND DETERMINE THE PROXIMITY OF STRUCTURES ON EITHER SIDE OF THE CROSSINGS. THE CONTRACTOR SHALL PROVIDE THE OWNER WITH A DRILLING PLAN OUTLINING PROCEDURES TO PREVENT FRAC-OUT AND DRILLING FLUID OR THE DRILLING PROCESS FROM ADVERSELY AFFECTING THESE STRUCTURES.

C. PRIOR TO PRE-CONSTRUCTION MEETING CONTRACTOR IS TO SUBMIT FRAC-OUT PLAN PER STATE WATER QUALITY STANDARDS, PURSUANT TO RULE 62-302, WITH DETAILS OF THE NON-TOXIC FLORESCENT TRACKING DYES THAT THE CONTRACTOR WILL USING WITH THE DRILLING LUBRICANT AS A MONITORING METHOD WITH THE BENTONITE.

D. PRIOR TO THE START OF WORK, THE CONTRACTOR SHALL ENGAGE A PROFESSIONAL ENGINEER REGISTERED IN THE STATE OF FLORIDA TO DESIGN A DETAILED PLAN OF BORING AND RECEIVING PITS, INCLUDING EXCAVATION, TOGETHER WITH AN OUTLINE OF THE METHODS TO BE USED AND A TIME SCHEDULE FOR DIRECTIONAL DRILL OPERATIONS. IN ADDITION CONTRACTOR SHALL IDENTIFY AN ENVIRONMENTAL SCIENTIST/BIOLOGIST WITH EXPERIENCE IN WATER QUALITY MONITORING AND HABITAT PROTECTION TO BE USED IN THE EVENT OF A FRAC-OUT.

E. THREE WORKDAYS WRITTEN NOTICE PRIOR TO START OF THE ACTUAL WORK SHALL BE GIVEN TO THE OWNER AND ENGINEER.

F. THE CONTRACTOR SHALL INSTALL, MAINTAIN, AND LEAVE IN PLACE ANY SHEETING, UNDERPINNING, CRIBBING, AND OTHER RELATED ITEMS (OTHER THAN THAT REQUIRED FOR THE BORING AND RECEIVING PITS) TO SUPPORT ANY STRUCTURE OR FACILITY AFFECTED BY THE BORING OPERATIONS. THE ENGINEER, DEPENDING UPON EXISTING CONDITIONS, MAY REQUIRE THAT ADDITIONAL SHEETING FOR THE EXCAVATION BE LEFT IN PLACE.

G. THE CONTRACTOR SHALL ASSUME 'ALL RESPONSIBILITY FOR THE METHODS AND MEANS OF CONSTRUCTION, THE STABILITY AND ACCURACY OF THE DRILLED AND REAMED HOLE AND CONSTRUCTED PITS, AND ALL COST RESPONSIBLE FOR THE SAFETY OF THE PITS AND RELATED STRUCTURES, AND PERSONNEL ENGAGED IN CONSTRUCTION THROUGHOUT THE DURATION OF WORK.

H. ALL WORK UNDER THIS SPECIFICATION AFFECTING THE RIGHT-OF-WAY, OR MUNICIPAL FACILITIES SHALL BE CARRIED OUT TO THE FULL SATISFACTION OF THE AUTHORIZED REPRESENTATIVE. IT IS THE CONTRACTOR'S RESPONSIBILITY TO BE FULLY INFORMED OF ALL REQUIREMENTS, AND PERMIT CONDITIONS AS IT PERTAINS TO THE SPECIFIC PROJECT AND SHALL CONDUCT ALL WORK ACCORDINGLY.

I. ALL EQUIPMENT USED BY THE CONTRACTOR ON OWNER'S PROPERTY AND RIGHTS-OF-WAY MAY BE INSPECTED BY THE OWNER OR THE OWNER'S REPRESENTATIVES.

J. THE CONTRACTOR SHALL BE FULLY RESPONSIBLE FOR ALL DAMAGES ARISING FROM THE FAILURE OF THE CONTRACTOR OR SUBCONTRACTORS TO COMPLY WITH THE REGULATIONS AND THE REQUIREMENTS OF THESE SPECIFICATIONS.

K. THE CONTRACTOR'S METHODS AND SCHEDULE SHALL COMPLY WITH THE OVERALL PROJECT REQUIREMENTS. THE CONTRACTOR SHALL BE FAMILIAR WITH THE WORK WITHIN THE LOCAL SUBSURFACE CONDITIONS. THE CONTRACTOR'S SELECTION OF INADEQUATE, INAPPROPRIATE, OR INEFFICIENT EQUIPMENT AND METHODS WILL NOT BE CAUSE FOR ADJUSTMENTS TO THE CONTRACT PRICE OR CONTRACT TIME.

L. THE CONTRACTOR SHALL BE RESPONSIBLE FOR ALL CLEAN UP OF PROJECT SITE, DEBRIS, MATERIALS AND EQUIPMENT AND SHALL CLEAR THE SITE OF AND DISPOSE OF THEM IN ACCORDANCE WITH CONTRACT DOCUMENTS.

IV. SUBMITTALS

A. THE CONTRACTOR SHALL SUBMIT FOR THE OWNER'S AND ENGINEER'S APPROVAL THE QUALIFICATIONS OF THE DIRECTIONAL DRILLING SPECIALTY PROVIDER INDICATING COMPLIANCE WITH THE FOLLOWING MINIMUM EXPERIENCE CRITERIA:

1. DESCRIPTIONS OF SUCCESSFULLY COMPLETED SIMILAR PROJECTS USING THE GUIDED DIRECTIONAL DRILL TECHNIQUE, WHICH SHALL INCLUDE A LISTING OF THE FOLLOWING INFORMATION.

a. PROJECT NAME AND LOCATION

b. YEAR OF PROJECT

c. OWNER/CLIENT

d. CLIENT CONTACT INFORMATION

e. DIAMETER AND MATERIAL OF PIPE

f. LENGTH OF DIRECTION DRILLING INSTALLATION

g. OTHER INFORMATION RELEVANT TO THE SUCCESSFUL COMPLETION OF THE PROJECT

2. DOCUMENTATION OF COMPLIANCE WITH THE FOLLOWING MINIMUM STANDARDS:

a. THE DIRECTIONAL DRILLING SPECIALTY PROVIDER SHALL BE AN EXPERIENCED, LICENSED CONTRACTOR SPECIALIZING IN GUIDED DIRECTIONAL DRILLING AND WHOSE KEY PERSONNEL ASSIGNED TO THIS WORK SHALL HAVE A MINIMUM OF FIVE (5) YEARS OF RELATED DIRECTIONAL DRILLING EXPERIENCE.

b. THE DIRECTIONAL DRILLING SPECIALTY PROVIDER SHALL HAVE INSTALLED UTILITIES UNDER MAJOR WATERWAYS VIA DIRECTIONAL DRILL TECHNIQUE.

B. TWO (2) WEEKS PRIOR TO THE START OF THE DIRECTIONAL DRILLING WORK, THE CONTRACTOR SHALL SUBMIT THE DIRECTIONAL DRILLING WORK PLAN FOR THE OWNER'S AND ENGINEER'S REVIEW. THE WORK PLAN SHALL INCLUDE THE FOLLOWING INFORMATION.

1. A PLAN SHOWING DETAILS OF THE PROPOSED METHOD OF CONSTRUCTION, SEQUENCE OF OPERATIONS TO BE PERFORMED, NUMBER AND SIZE OF CONSTRUCTION CREW, HOURS TO BE WORKED, PILOT HOLE DRILLING PROCEDURE, REAMING PROCEDURE, PULLBACK PROCEDURE, METHOD OF MONITORING THE DRILLING HEAD AND METHOD OF VERIFYING PIPE LOCATION FOR AS-BUILT DRAWINGS.

2. A DRILLING FLUID PLAN WHICH DETAILS TYPES OF DRILLING FLUIDS, INCLUDING THE OF NON-TOXIC FLUORESCENT TRACKING DYES, CLEANING AND RECYCLING EQUIPMENT, ESTIMATED FLOW RATES, AND PROCEDURES FOR MINIMIZING DRILLING FLUID ESCAPE.

3. A PLAN IN THE EVENT OF DRILLING FLUID ESCAPE INCLUDING, BUT NOT LIMITED TO, STOPPAGE OF WORK, NOTIFICATION OF APPLICABLE PERMITTING AUTHORITIES WHOSE RIGHT-OF-WAY IS IMPACTED BY THE ESCAPE OF DRILLING FLUID, PROCEDURE TO CONFINE DRILLING FLUIDS/MUDS, AND PROCEDURE FOR REPAIR/PLUGGING OF FISSURES.

4. A PLAN AND PROFILE DRAWING SHOWING THE CONTRACTOR'S PROPOSED PILOT BORE HOLE ROUTING AND LOCATION OF OTHER UNDERGROUND UTILITIES. THE PLAN DRAWING SHALL BE AT A 1" = 20' SCALE AND THE PROFILE DRAWING AT A 1" = 20' SCALE HORIZONTAL AND 1 " = 2' SCALE VERTICAL.

5. A 1" = 20' SCALE DRAWING OF THE PROPOSED SETUP OF MAJOR EQUIPMENT AT THE ENTRY POINT AND THE PROPOSED LAYOUT PIPE AT THE EXIT POINT.

C. THE CONTRACTOR SHALL FURNISH SHOP DRAWINGS SHOWING ALL FABRICATION AND CONSTRUCTION DETAILS FOR THE DIRECTIONAL DRILLED CROSSINGS.

D. THE CONTRACTOR WILL BE RESPONSIBLE FOR MAINTAINING DRILLING LOGS THAT PROVIDE DRILL BIT LOCATIONS AT LEAST 30 FEET ALONG THE DRILL PATH. IN ADDITION, LOGS WILL BE KEPT THAT RECORD THE FOLLOWING ON AN HOURLY BASIS THROUGHOUT EACH DRILL PASS, BACKREAM PASS OR PIPE INSTALLATION PASS:

1. DRILL FLUID PRESSURE
2. DRILLING FLUID FLOW RATE
3. DRILL THRUST PRESSURE
4. DRILL PULLBACK PRESSURE
5. DRILL HEAD TORQUE
6. HORIZONTAL DISTANCE OF DRILL HEAD FROM ENTRY POINT

E. UPON COMPLETION OF THE PILOT HOLE PHASE OF THE OPERATION, A COMPLETE SET OF AS-BUILT RECORDS SHOWING THE ACTUAL HORIZONTAL AND VERTICAL ALIGNMENT OF THE PILOT BORE AT INTERVALS NOT EXCEEDING 30 FEET SHALL BE SUBMITTED IN DUPLICATE TO THE ENGINEER ALONG WITH ONE ELECTRONIC AUTOCAD AS-BUILT DRAWING FILE. THESE RECORDS SHALL INCLUDE COPIES OF THE PLAN DRAWING AT A 1" = 20' SCALE, AND A PROFILE DRAWING AT A 1" = 20' SCALE HORIZONTAL AND A 1" = 2' SCALE VERTICAL, AS WELL AS DIRECTIONAL SURVEY REPORTS AS RECORDED DURING THE DRILLING OPERATION.

V. SAFETY

A. THE CONTRACTOR SHALL, AT ALL TIMES, CONFORM TO ALL APPLICABLE STATE AND FEDERAL REGULATIONS.

B. THE SERVICES PROVIDED BY THE CONTRACTOR SHALL BE IN COMPLIANCE WITH ALL APPLICABLE GOVERNING REGULATIONS: CITY OF WILTON MANORS, OSHA GUIDELINES, SOUTH FLORIDA WATER MANAGEMENT DISTRICT MANUALS AND GUIDELINES, STATE OF FLORIDA DEPARTMENT OF ENVIRONMENTAL PROTECTION, AND BROWARD COUNTY ENVIRONMENTAL PROTECTION AND GROWTH MANAGEMENT DEPARTMENT REGULATIONS AND GUIDELINES.

C. GUIDED DIRECTIONAL DRILLING EQUIPMENT MACHINE SAFETY REQUIREMENTS WILL INCLUDE A COMMON GROUNDING SYSTEM TO PREVENT ELECTRICAL SHOCK IN THE EVENT OF HIGH VOLTAGE UNDERGROUND CABLE STRIKE. THE GROUNDING SYSTEM WILL CONNECT ALL PIECES OF INTERCONNECTING MACHINERY: THE DRILL, MUD MIXING SYSTEM, DRILL POWER UNIT, DRILL ROD TRAILER, OPERATOR'S BOOTH, WORKER GROUNDING MATS AND ANY OTHER INTERCONNECTED EQUIPMENT TO A COMMON GROUND. THE DRILL WILL BE EQUIPPED WITH AN "ELECTRICAL STRIKE' AUDIBLE AND VISUAL WARNING SYSTEM THAT WILL NOTIFY THE SYSTEM OPERATORS OF AN ELECTRICAL STRIKE.

D. OPERATORS OF THE DRILL WILL WEAR ELECTRICAL SHOCK PROTECTION EQUIPMENT AND OPERATE FROM COMMON GROUNDED MATS AS REQUIRED.

VI. MATERIALS

A. EQUIPMENT (GRADERS, SHOVELS, ETC.) AND MATERIALS (SUCH AS GROUNDSHEETS, HAY BALES, BOOMS, AND ABSORBENT PADS) FOR CLEANUP AND CONTINGENCIES SHALL BE PROVIDED IN SUFFICIENT QUANTITIES BY CONTRACTOR AND MAINTAINED AT ALL SITES FOR USE IN THE EVENT OF INADVERTENT LEAKS, SEEPS OR SPILLS.

B. TECHNICAL CRITERIA FOR BENTONITE SHALL BE AS GIVEN IN API SPEC. 13A, SPECIFICATION FOR OIL WELL DRILLING FLUIDS MATERIAL FOR FRESH WATER DRILLING FLUIDS. ANY MODIFICATION TO THE BASIS DRILLING FLUID INVOLVING ADDITIVES MUST DESCRIBE THE TYPE OF MATERIAL TO BE USED AND BE INCLUDED IN CONTRACTOR'S DRILLING PLAN PRESENTED TO OWNER. THE OWNER RETAINS THE RIGHT TO SAMPLE AND MONITOR THE WASTE DRILLING MUD, CUTTINGS AND WATER.

VII. HDPE PIPELINE IDENTIFICATION

A. ALL POLYETHYLENE PIPE SHALL BE BLACK, AND SHALL CONTAIN A CONTINUOUS COLORED STRIPE, 2 INCHES WIDE, AT THREE SEPARATE LOCATIONS ALONG THE LENGTH OF THE PIPE. STRIPE COLOR SHALL BE:

1. POTABLE WATER MAINS - BLUE STRIPE
2. RECLAIMED WATER MAINS - PURPLE STRIPE
3. FORCE MAINS - BROWN STRIPES
4. SANITARY SEWER - GREEN STRIPE
5. STORM SEWER - NO STRIPES REQUIRED

VIII. DIRECTIONAL DRILLING OPERATION

A. THE CONTRACTOR SHALL PROVIDE ALL MATERIAL, EQUIPMENT, AND FACILITIES REQUIRED FOR DIRECTIONAL DRILLING. PROPER ALIGNMENT AND ELEVATION OF THE OPENING SHALL BE CONSISTENTLY MAINTAINED THROUGHOUT THE DIRECTIONAL DRILLING OPERATION. ENTRANCE AND EXIT ANGLES FOR THE DRILL ARE AT THE CONTRACTOR'S DISCRETION SUCH THAT THE ELEVATION PROFILE MAINTAINS ADEQUATE GROUND COVER TO REASONABLY PRECAUTION AGAINST HYDRAULIC FRACTURES WITH THE DRILLING FLUID AND MAINTAIN THE MINIMUM COVER SHOWN IN THE DRAWINGS AND SPECIFIED HEREIN.

B. THE POSITION OF THE DRILL STRING SHALL BE MONITORED BY THE CONTRACTOR WITH THE DOWNHOLE SURVEY INSTRUMENTS. THE CONTRACTOR SHALL COMPUTE THE POSITION IN THE X, EVERY 30 FEET. SERIOUS DEVIATIONS BETWEEN THE DESIGN POSITION WHICH MAY AFFECT THE INSTALLATION OF THE PIPELINE AND ARE BEYOND THE CONTROL OF THE CONTRACTOR TO CORRECT SHALL BE DOCUMENTED AND IMMEDIATELY BROUGHT TO THE ATTENTION OF THE OWNER FOR DISCUSSION AND/OR APPROVAL. THE PROFILE AND ALIGNMENT DEFINED ON THE CONSTRUCTION DRAWINGS FOR THE BORES DEFINE THE MINIMUM DEPTH AND RADIUS OF CURVATURE. AT NO POINT IN THE DRILLED PROFILE SHALL THE RADIUS OF CURVATURE OF THE BORE BE LESS THAN 1,000 FEET. THE CONTRACTOR SHALL MAINTAIN AND PROVIDE TO THE OWNER, UPON REQUEST, THE DATA GENERATED BY THE DOWNHOLE SURVEY TOOLS IN A FORM SUITABLE FOR INDEPENDENT CALCULATION OF THE PILOT HOLE PROFILE.

C. BORING PITS SHALL BE SHORED WITH SHEETING OR SUCH OTHER MATERIALS AS REQUIRED. SHEETING SHALL BE DRIVEN TO A SUFFICIENT DEPTH BELOW THE INVERT OF THE CARRIER PIPE TO RESIST ANY PRESSURE DEVELOPED BY THE SOIL OUTSIDE THE BORING PIT. SHEETING WHEN USED SHALL TERMINATE NOT LESS THAN 3 FEET 6 INCHES ABOVE EXISTING GRADE.

D. AT THE COMPLETION OF THE DIRECTION DRILLING OPERATIONS, THE CONTRACTOR WILL BE REQUIRED TO REMOVE ALL SHEETING IN PLACE. IF STEEL SHEETING IS USED, IT MAY BE REMOVED AFTER INSTALLATION OF THE CARRIER PIPE IN THE BORE HOLE, BUT PRIOR TO INSTALLATION OF THE JOINING CARRIER PIPE. HOWEVER, SHOULD DAMAGE TO THE ROADWAY, PIPELINE OR ANY OTHER ADJACENT STRUCTURE OCCUR, THE CONTRACTOR SHALL LEAVE ALL REMAINING SHEETING IN PLACE AND REDRIVE AND LEAVE IN PLACE ANY SHEETING WHICH IS REQUIRED TO STABILIZE THE SITE AND PREVENT ADDITIONAL DAMAGE FROM OCCURRING. THE TOP OF ALL SHEETING LEFT IN PLACE SHALL BE CUT OFF 36 INCHES BELOW FINISHED GRADE.

E. BENTONITE OR OTHER STABILIZING GELS SHALL BE USED TO PREVENT CALVING OF THE UNSUPPORTED BORE HOLE.

IX. DRILLING FLUIDS AND CUTTINGS

A. TO THE EXTENT PRACTICAL, THE CONTRACTOR SHALL MAINTAIN A CLOSED LOOP DRILLING FLUID SYSTEM AND UTILIZE DRILLING TOOLS AND PROCEDURES WHICH WILL MINIMIZE THE DISCHARGE OF ANY DRILLING FLUIDS.

B. CONTRACTOR SHALL HAVE DIVERS PRESENT DURING THE DRILLING OPERATIONS IN ORDER TO RESPOND TO POTENTIAL FRAC-OUT RELEASE.

C. THE GUIDED HORIZONTAL DIRECTION DRILLING OPERATION IS TO BE OPERATED IN A MANNER TO ELIMINATE THE DISCHARGE OF WATER, DRILLING MUD AND CUTTINGS TO THE CANAL OR LAND AREAS INVOLVED DURING THE CONSTRUCTION PROCESS. THE CONTRACTOR SHALL PROVIDE EQUIPMENT AND PROCEDURES TO MAXIMIZE THE RECIRCULATION OR REUSE OF DRILLING MUD TO MINIMIZE WASTE. ALL EXCAVATED PITS USED IN THE DRILLING OPERATION SHALL BE LINED BY CONTRACTOR WITH HEAVY DUTY PLASTIC SHEETING WITH SEALED JOINTS TO PREVENT THE MIGRATION OF DRILLING FLUIDS AND/OR GROUND WATER.

D. PITS CONSTRUCTED AT THE ENTRY OR EXIT POINT AREA SHALL BE SO CONSTRUCTED TO COMPLETELY CONTAIN THE DRILL FLUID AND PREVENT ITS ESCAPE TO THE SURROUNDING LAND OR CANAL.

E. WASTE CUTTINGS AND DRILLING MUD SHALL BE PROCESSED THROUGH A SOLIDS CONTROL PLANT COMPRISED AS A MINIMUM OF STUMPS, PUMPS, TANKS, DISTILLER/DESANDER, CENTRIFUGES, MATERIAL HANDLERS, AND HAULERS ALL IN A QUANTITY SUFFICIENT TO PERFORM THE CLEANING/SEPARATING OPERATION WITHOUT INTERFERENCE WITH THE DRILLING PROGRAM. THE CUTTINGS AND EXCESS DRILLING FLUIDS SHALL BE DEWATERED AND DRIED BY CONTRACTOR TO THE EXTENT NECESSARY FOR DISPOSAL, AND DISPOSAL IN OFFSITE LANDFILLS AT THE CONTRACTOR'S EXPENSE. WATER FROM THE DEWATERING PROCESS SHALL BE TREATED BY CONTRACTOR TO MEET PERMIT REQUIREMENTS AND DISPOSED OF LOCALLY. THE CUTTINGS AND WATER FOR DISPOSAL ARE SUBJECT TO BEING SAMPLED AND TESTED. THE CONSTRUCTION SITE AND ADJACENT AREAS WILL BE CHECKED FREQUENTLY FOR SIGNS OF UNPLANNED LEAKS OR SEEPS.

F. ALL DRILLING MUD SHALL BE REMOVED FROM THE ENTRY AND EXIT AREA SOILS SUCH THAT WATER WILL PERCOLATE. ALL DISTURBED AREAS SHALL BE RESTORED TO ORIGINAL CONDITIONS.

X. DIRECTION DRILL WORK PLAN & CONTINGENCY

A. AT LEAST, TWO (2) WEEKS PRIOR TO THE START OF THE DIRECTIONAL DRILLING WORK, THE CONTRACTOR SHALL SUBMIT THE DIRECTIONAL DRILLING WORK PLAN FOR THE CITY AND ENGINEER'S REVIEW. THE WORK PLAN SHALL INCLUDE THE FOLLOWING INFORMATION.

1. A PLAN SHOWING DETAILS OF THE PROPOSED METHOD OF CONSTRUCTION, SEQUENCE OF OPERATIONS TO BE PERFORMED, NUMBER AND SIZE OF CONSTRUCTION CREW, HOURS TO BE WORKED, PILOT HOLE DRILLING PROCEDURE, REAMING PROCEDURE, PULLBACK PROCEDURE, METHOD OF MONITORING THE DRILLING HEAD AND METHOD OF VERIFYING PIPE LOCATION FOR AS-BUILT DRAWINGS.

2. A DRILLING FLUID PLAN WHICH DETAILS TYPES OF DRILLING FLUIDS, CLEANING AND RECYCLING EQUIPMENT, ESTIMATED FLOW RATES, AND PROCEDURES FOR MINIMIZING DRILLING FLUID ESCAPE.

3. A FRAC-OUT PLAN IN THE EVENT OF DRILLING FLUID ESCAPE TO ENSURE THAT PREVENTIVE AND RESPONSIVE MEASURES ARE IMPLEMENTED, INCLUDING, BUT NOT LIMITED TO, THE ITEMS BELOW:

B. CONTINGENCY PLAN

1. IDENTIFY SENSITIVE ENVIRONMENTAL AREAS AND EXISTING STRUCTURES THAT CAN POTENTIALLY BE AFFECTED.

2. ENSURE THAT EXPERIENCED TECHNICIANS PERFORM THE HORIZONTAL DIRECTIONAL DRILLING TO MAINTAIN SAFE LIMITS OF DRILLING FLUID PRESSURE WHICH SHALL NOT EXCEED 10 PSI.

3. PROVIDE PROTOCOL FOR THE TIMELY DETECTION OF FRAC-OUTS BY CONSTANTLY MONITORING AND RECORDING OBSERVABLE FRAC-OUT CONDITIONS DURING HORIZONTAL DIRECTIONAL DRILLING ACTIVITIES:

A. DRILLING FLUID PRESSURE (NOT TO EXCEED 10 PSI)
B. PUMP VOLUME RATES
C. LOSS OF CIRCULATION
D. LOCATION OF DRILL HEAD

4. FIELD MEETINGS SHALL BE CONDUCTED FOR THE WORKERS TO IDENTIFY AND LOCATE SENSITIVE AREAS AT THE SITE WHICH INCLUDE THE SFWMD C-14 CANAL, ADJACENT RESIDENTIAL AREAS, ADJACENT RECREATIONAL AREAS (VETERANS MEMORIAL PARK), BIKE PATH ON THE SOUTH BANK OF THE C-14 CANAL, EXISTING UTILITIES, ETC.

5. UNDERSTAND RESPONSIBILITIES FOR TIMELY REPORTING ANY FRAC-OUT.

6. IDENTIFY QUALIFIED COMPETENT PERSON TO SERVE AS A SINGLE POINT OF CONTACT ONSITE FOR IMPLEMENTING THE FRAC-OUT PLAN.

7. IMPLEMENT AND MONITOR PROPER INSTALLATION OF STORMWATER POLLUTION PREVENTION PLAN (SWPPP) DURING HORIZONTAL DIRECTIONAL DRILLING ACTIVITIES.

C. PROTOCOL TO IMPLEMENT IN CASE OF FRAC-OUT

1. WORK WILL BE STOPPED IN THE EVENT OF A SPILL, INCLUDING THE RECYCLING OF DRILLING MUD/LUBRICANT.

2. DETERMINE THE AMOUNT OF DRILLING MUD RELEASED AND POTENTIAL FOR THE RELEASE TO REACH WATERBODIES.

3. DETERMINE THE LOCATION AND EXTEND OF THE FRAC-OUT:

IN LAND:
1. IMPLEMENT AND ENFORCE SWPPP AND ISOLATE THE AREA WITH SAND BAGS, HAY BALES, OR SILT FENCE TO SURROUND AND CONTAIN THE DRILLING MUD.
2. USE VACUUM TRUCKS FOR ASSISTANCE IN THE REMOVAL OF DRILLING FLUID.
3. ONCE EXCESS DRILLING MUD IS REMOVED, THE AREA WILL BE REPLANTED USING SPECIES SIMILAR TO THOSE IN THE ADJACENT AREA. VEGETATED AREAS SHALL BE MAINTAINED AND WATERED FOR 30 DAYS AT NO EXTRA COST TO THE CITY.

XI. INSTALLING PIPE

A. THE PIPE INSTALLED WITHIN THE BORING SHALL BE IN FULL CONFORMITY WITH THESE SPECIFICATIONS AND AS SHOWN ON THE DRAWINGS. THE PIPE SHALL BE INSTALLED, AS TO A REASONABLE DIRECTIONAL DRILLING ABILITY, TO THE EXACT LINES GRADES REQUIRED AFTER HAVING BEEN SATISFACTORILY APPROVED BY THE ENGINEER FROM THE DIRECTIONAL DRILLERS EXPECTED DRILL PATH PLAN AND PROFILE SHEETS PROVIDED IN SECTION 1.5.

B. THE TYPE AND SIZE OF THE PILOT STRING CUTTING HEAD SHALL BE AT THE CONTRACTOR'S DISCRETION. THE TYPE AND OUTSIDE DIAMETER OF THE DRILL PIPE TO BE USED IN THE PILOT STRING SHALL ALSO BE AT THE CONTRACTOR'S DISCRETION.

C. A MINIMUM DEPTH REQUIREMENT OF 6 FEET BELOW THE EXISTING CROSSING BOTTOMS SHALL BE MAINTAINED, DEPTHS DEEPER THAN 6 FEET SHALL BE ACCEPTABLE. LATERAL POSITIONING AT EXIT SHALL BE NO FURTHER THAN 5 FEET LEFT OR RIGHT OF PLANNED CENTERLINE, AND HORIZONTAL POSITIONING SHALL BE NO FURTHER THAN 5 FEET SHORT OR LONG OF PROPOSED EXIT LOCATION. ENTRY AND EXIT LOCATIONS, AS WELL AS INTERMEDIATE CENTERLINE STATIONING, SHALL BE STAKED BY THE CONTRACTOR.

D. UPON APPROVAL OF THE PILOT HOLE LOCATION BY THE ENGINEER, THE HOLE OPENING OR ENLARGING PHASE OF THE INSTALLATION SHALL BEGIN. THE TYPE OF HOLE OPENER OR BACK REAMER TO BE UTILIZED IN THIS PHASE SHALL BE DETERMINED BY THE TYPES OF SUBSURFACE SOIL CONDITIONS THAT HAVE BEEN ENCOUNTERED DURING THE PILOT HOLE DRILLING OPERATION. THE REAMER TYPE SHALL BE AT THE CONTRACTOR'S DISCRETION.

E. THE OPEN BOREHOLE MAY BE STABILIZED BY MEANS OF BENTONITE DRILLING SLURRY BEING PUMPED THROUGH THE INSIDE DIAMETER OF THE DRILL PIPE AND THROUGH OPENING IN THE REAMER. THE SLURRY WILL ALSO SERVE AS AN AGENT TO CARRY THE LOOSE CUTTING TO THE SURFACE THROUGH THE ANNULUS OF THE BOREHOLE. THESE CUTTINGS AND BENTONITE SLURRY ARE TO BE CONTAINED AT THE EXIT OR ENTRY SIDE OF THE DIRECTIONAL BORE IN PITS OR HOLDING TANKS. THE SLURRY MAY BE RECYCLED AT THIS TIME FOR REUSE IN THE HOLE OPENING OPERATION, OR IT SHALL BE HAULED BY THE CONTRACTOR TO AN APPROVED DUMP SITE AND PROPERLY DISPOSED.

F. EACH LENGTH OF PIPE SHALL BE INSPECTED AND CLEANED AS NECESSARY TO BE FREE OF DEBRIS IMMEDIATELY PRIOR TO JOINING.

G. A COMPLETE LIST OF ALL DRILLING FLUID ADDITIVES AND MIXTURES TO BE USED IN THE DIRECTIONAL OPERATION WILL BE SUBMITTED TO THE ENGINEER, ALONG WITH THEIR RESPECTIVE MATERIAL SAFETY DATA SHEETS. ALL DRILLING FLUIDS AND LOOSE CUTTINGS SHALL BE CONTAINED IN PITS OR HOLDING TANKS FOR RECYCLING OR DISPOSAL, NO FLUIDS SHALL BE ALLOWED TO ENTER ANY UNAPPROVED AREAS OR NATURAL WATERWAYS. UPON COMPLETION OF THE DIRECTIONAL DRILL PROJECT, DRILLING FLUID SHALL BE DISPOSED OF BY THE CONTRACTOR AT AN APPROVED DUMP SITE.

H. A "WEAK-LINK OR BREAKAWAY DEVICE SHALL BE USED AT THE LEADING END OF THE PIPE TO PROTECT THE PIPE FROM EXCESSIVE PULLING LOADS. THE BREAKAWAY STRENGTH OF THIS DEVICE SHALL BE SET AT OR BELOW THE ALLOWABLE TENSILE LOAD OF THE PIPE.

I. HDPE PIPE SHALL NOT BE PLACED IN DIRECT SUNLIGHT IMMEDIATELY PRIOR TO INSTALLATION.

J. A SUFFICIENT LENGTH OF HDPE PIPE SHALL BE PULLED PAST THE EXIT POINT AND LEFT BEFORE THE ENTRY POINT TO ALLOW FOR RELAXATION.

K. HDPE PIPE SHALL HAVE MECHANICAL JOINT ADAPTERS TO CONNECT TO THE PIPE ON EITHER SIDE OF THE DIRECTIONAL DRILLS. MECHANICAL JOINT ADAPTER USED IS TO MATCH HDPE PIPE MANUFACTURER REQUIREMENTS FOR CONNECTION TO DUCTILE IRON PIPE.

L. HDPE SHALL HAVE SUFFICIENT TIME FOR RELAXATION BEFORE CONNECTING TO THE PIPE ON EITHER SIDE OF THE DIRECTION DRILL.

XII. TRACKING, GUIDANCE SYSTEM, AND SURVEYING

A. CONTRACTOR SHALL CAREFULLY PLAN THE DRILL PATH AND ENSURE ALL EXISTING UTILITIES ARE IDENTIFIED. ACCURACY OF THE DRILL PATH LOCATION IS A PRIORITY. CONTRACTOR SHALL ONLY USE A WIRE-LINE LOCATING SYSTEM OR A GYRO-BASED LOCATING SYSTEM FOR THE TRACKING, STEERING, AND GUIDANCE OF THE DIRECTIONAL BORE. CONTRACTOR SHALL MONITOR AND RECORD THE BORE LOCATION DURING INSTALLATION TO UNSURE ACCURACY OF INSTALLATION. CONTRACTOR SHALL PROVIDE AS-BUILTS (MAPPING IN AUTOCAD) OF THE INSTALLED PIPE BASED ON THE TRACKING DATA GENERATED BY THE GUIDANCE SYSTEM.

B. CONTRACTOR SHALL TRACK AND MAINTAIN A DRILL LOG THAT PROVIDES LOCATION OF THE DRILL BIT LOCATION AT LEAST EVERY 30 FEET ALONG THE DRILL PATH. INFORMATION PROVIDED BY CONTRACTOR ALSO SHALL RECORD ON AN HOURLY BASIS:

1. DRILL FLUID PRESSURE
2. DRILLING FLUID FLOW RATE
3. DRILL THURST PRESSEURE
4. DRILL PULLBACK PRESSURE
5. DRILL HEAD TORQUE

C. AS-BUILTS SHALL INDICATE THE SIZE PIPE, DR OF PIPE, VERTICAL AND HORIZONTAL LOCATION OF THE PIPE.

XIII. EXISTING UTILITIES

A. THE DRAWINGS SHOW EXISTING BURIED UTILITIES THAT ARE BELIEVED TO BE NEAR THE DIRECTIONAL DRILL ALIGNMENT. THERE IS NO GUARANTEE THAT THESE UTILITIES ARE LOCATED AS SHOWN OR THAT OTHER UTILITIES MAY BE PRESENT. IT IS THE CONTRACTOR'S RESPONSIBILITY TO LOCATE ALL UTILITIES OR OTHER SUBSURFACE OBSTRUCTIONS THAT MAY INTERFERE WITH THE WORK.

B. UTILITY LINES AND STRUCTURES INDICATED ON THE DRAWINGS WHICH ARE TO REMAIN IN SERVICE SHALL BE PROTECTED BY THE CONTRACTOR FROM ANY DAMAGE AS A RESULT OF THE OPERATIONS. WHERE UTILITY LINES OR STRUCTURES NOT SHOWN ON THE DRAWINGS ARE ENCOUNTERED, THE CONTRACTOR SHALL REPORT THEM TO THE OWNER BEFORE PROCEEDING WITH THE WORK. THE CONTRACTOR SHALL BEAR THE COST OF REPAIR OR REPLACEMENT OF ANY UTILITY LINES OR STRUCTURES WHICH ARE BROKEN OR DAMAGED BY THE CONTRACTOR'S OPERATIONS.

C. ALL UTILITIES IN CLOSE PROXIMITY TO THE DRILL PILOT BORE, BACK REAM OR CARRIER PIPE INSTALLATION MUST BE EXPOSED THROUGH A "POT-HOLE" OR OTHER OPENING, IN ACCORDANCE WITH STATE UTILITY LOCATE LAWS AND REGULATIONS, TO ENSURE, THROUGH VISUAL INSPECTION, THAT THE DRILL, REAMER OR PIPE HAS CAUSED NO DAMAGE TO THE UTILITY AND MAINTAINS ADEQUATE CLEARANCE.

VERTICAL DATUM INFORMATION
ALL ELEVATIONS SHOWN ARE IN NORTH AMERICAN VERTICAL DATUM OF 1988 (NAVD88)

Sunshine 811
Call 811 or visit sunshine811.com two full business days before digging to have buried facilities located and marked.
Check positive response codes before you dig!

BID SET

chen moore and associates
500 West Cypress Creek Road
Suite 600
Ft. Lauderdale, FL 33309
954.730.0707
www.chenmoore.com

REGISTRATION
DAVID EDGARDO CASTRO FELIU, PE
LICENSE NO. 85558
DATE: 11/08/24

DAVID EDGARDO CASTRO FELIU
LICENSE
No. 85558
STATE OF FLORIDA
PROFESSIONAL ENGINEER

THIS SEAL IS ONLY VALID ON PRINTED COPIES THAT ARE DATED WITH THE LICENSEE'S ORIGINAL HAND SIGNATURE. SCANNED OR ELECTRONIC COPIES ARE NOT CONSIDERED SIGNED AND SEALED.

CLIENT
pompano beach
Florida's Warmest Welcome
CITY OF POMPANO BEACH
100 WEST ATLANTIC BOULEVARD
POMPANO BEACH, FL 33060
Phone: 954.786.4600

PROJECT INFORMATION
NON SEWER AREA C SANITARY SEWER IMPROVEMENTS
POMPANO BEACH, FL

PROJECT NUMBER
23-0092.00085

CLIENT PROJECT NUMBER
P331425

VERIFY SCALES
0 — 1"
IF NOT ONE INCH ON THIS SHEET, ADJUST SCALES ACCORDINGLY

REVISIONS

DATE OF ISSUE
11/08/24

DESIGNED BY
DC

DRAWN BY
JT

CHECKED BY
DC

DRAWING TITLE
GENERAL NOTES

DRAWING NUMBER
GN-3

Plot Date: 11/16/2024 12:10:04 AM Username: jspicer Layout Name: GN-3 Filename: 23-0092.00085 General Notes.dwg
Folder Path: V:\Projects\2023\23-0092.00085 - area c sanitary sewer design services\Design\CAD\Sheets

XIV. HDPE PIPE FUSING

A. STANDARD PRACTICE FOR HDPE FUSION SHALL FOLLOW THE RECOMMENDATIONS FROM THE LATEST REVISIONS OF ASTM 2620, ISO 21307 AND INDUSTRY STANDARD INTERNATIONAL PRACTICES.

B. CONTRACTOR TO HANDLE PIPE AND FUSING OPERATIONS WITH CARE. FUSE JOINTS MUST BE PROTECTED FROM RAIN, WATER AND DUST DURING FUSING OPERATIONS.

C. CONTRACTOR MUST USE DATA LOGGERS AND PROVIDE DETAILED RESULTS TO CONSULTANT PRIOR TO PULLING OR INSTALLATION OF THE PIPE.

D. FUSING BEADS MUST BE INSPECTECT AND SHALL SHOW A CLEAN FUSE AS REQUIRED BY ASTM 2620

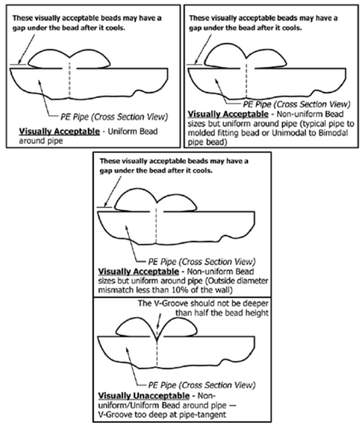

XV. TESTING

A. CONTRACTOR IS REQUIRED TO PERFORM A PRESSURE TEST PRIOR TO INSTALLATION OF PIPE. A LEAKAGE TEST IN ACCORDANCE WITH CONTRACT DOCUMENTS SHALL ALSO BE PERFORMED POST PULLING. ALL LEAKAGE TESTS SHALL BE COMPLETED AND APPROVED PRIOR TO PLACING OF PERMANENT RESURFACING. WHEN LEAKAGE EXCEEDS THE AMOUNT ALLOWED BY THE SPECIFICATIONS, THE CONTRACTOR, AT ITS EXPENSE, SHALL LOCATE THE LEAKS AND MAKE THE NECESSARY REPAIRS OR REPLACEMENTS IN ACCORDANCE WITH THE SPECIFICATIONS TO REDUCE THE LEAKAGE TO THE SPECIFIED LIMITS. ANY INDIVIDUALLY DETECTABLE LEAKS SHALL BE REPAIRED, REGARDLESS OF THE RESULTS OF THE TESTS.

B. LEAKAGE TESTS: THE LEAKAGE TESTING SHALL BE AS FOLLOWS:

1. HDPE FORCEMAINS SHALL BE HYDROSTATICALLY PRESSURE TESTED FOR LEAKAGE IN ACCORDANCE WITH ASTM F2164, AWWA MANUAL OF PRACTICE M55 CHAPTER 9, AND THE PLASTICS PIPE INSTITUTE (PPI) HANDBOOK OF POLYETHYLENE PIPE CHAPTER 2.

2. TEST PRESSURE

   THE MAXIMUM PERMISSIBLE TEST PRESSURE IS THE LOWER OF (A) 150% OF THE SYSTEM DESIGN OPERATING PRESSURE PROVIDED THAT ALL COMPONENTS IN THE TEST SECTION ARE RATED FOR THE TEST PRESSURE, OR (B) THE PRESSURE RATING OF THE LOWEST PRESSURE RATED COMPONENT IN THE TEST SECTION.

   FOR LEAK TESTING PURPOSES, THE MAXIMUM ALLOWABLE TEST PRESSURE IN POLYETHYLENE PIPE IS 150% OF THE PIPE'S DESIGN PRESSURE RATING FOR THE APPLICATION AND THE APPLICATION SERVICE TEMPERATURE.

   DO NOT SUBJECT LOWER PRESSURE RATED, NON-POLYETHYLENE PARTS OR DEVICES TO PRESSURES ABOVE THEIR PRESSURE RATING. LOWER PRESSURE RATED PARTS MAY BE REMOVED OR ISOLATED FROM THE TEST SECTION TO AVOID DAMAGE OR FAILURE. VENT ISOLATED PARTS OR EQUIPMENT TO ATMOSPHERE.

   ALL THERMOPLASTIC PIPES HAVE REDUCED STRENGTH AT ELEVATED TEMPERATURE. TEST PRESSURE MUST BE REDUCED WHEN THE TEST SECTION IS AT ELEVATED TEMPERATURE EITHER FROM SERVICE CONDITIONS OR FROM ENVIRONMENTAL CONDITIONS SUCH AS BEING WARMED BY THE SUN. MULTIPLY THE TEST PRESSURE BY THE TABLE 1 MULTIPLIER TO DETERMINE THE ALLOWABLE ELEVATED TEMPERATURE TEST PRESSURE.

3. HYDROSTATIC LEAK TESTING

   THIS HYDROSTATIC LEAK TEST PROCEDURE CONSISTS OF FILLING, AN INITIAL EXPANSION PHASE, A TEST PHASE, AND DEPRESSURIZING.

   INITIAL EXPANSION PHASE (HDPE)

   GRADUALLY PRESSURIZE THE TEST SECTION TO TEST PRESSURE, AND MAINTAIN TEST PRESSURE FOR FOUR (4) HOURS. DURING THE INITIAL EXPANSION PHASE, POLYETHYLENE PIPE WILL EXPAND SLIGHTLY. ADDITIONAL TEST LIQUID WILL BE REQUIRED TO MAINTAIN PRESSURE. IT IS NOT NECESSARY TO MONITOR THE AMOUNT OF WATER ADDED DURING THE INITIAL EXPANSION PHASE.

   TEST PHASE (HDPE)

   IMMEDIATELY FOLLOWING THE INITIAL EXPANSION PHASE, REDUCE TEST PRESSURE BY 10 PSI, AND STOP ADDING TEST LIQUID. IF TEST PRESSURE REMAINS STEADY (WITHIN 5% OF THE TARGET VALUE) FOR ONE (1) HOUR, NO LEAKAGE IS INDICATED. IF RETESTING IS NECESSARY, DEPRESSURIZE THE TEST SECTION AND CORRECT ANY FAULTS OR LEAKS IN THE TEST SECTION. DO NOT ATTEMPT TO CORRECT FAULTS OR FIX LEAKS WHILE THE TEST SECTION IS UNDER PRESSURE. THE TIME REQUIRED TO PRESSURIZE, STABILIZE, HOLD TEST PRESSURE, AND DEPRESSURIZE SHOULD NOT EXCEED 8 HOURS. IF RETESTING IS NECESSARY; THE TEST SECTION SHOULD BE DEPRESSURIZED FOR HOURS PRIOR TO RETESTING. UNDER NO CIRCUMSTANCE PRESSURIZE HDPE PIPE FOR LONGER THAN 8 HOURS.

4. HYDROSTATIC PRESSURE TEST FOR COMBINED HDPE AND DIP SEGMENTS

   A. PRESSURE TEST FOR COMBINED HDPE AND DIP SEGMENTS SHOULD ONLY BE USED WHEN THE CONTRACTOR CANNOT PERFORMED THE PRESSURE TEST FOR ISOLATED MATERIALS. CONTRACTOR MUST REQUEST PRIOR APPROVAL FROM THE ENGINEER AND THE OWNER BEFORE PERFORMING THE COMBINED PRESSURE TEST.

   B. WHERE A PRESSURE PIPE SYSTEM IS COMPOSED OF BOTH HDPE AND DI PIPE, THE FOLLOWING CRITERIA SHOULD BE FOLLOWED. THESE GUIDELINES ARE A COMBINATION OF REQUIREMENTS FOR HDPE AND DIP INDICATED IN ASTM F2164 AND AWWA C600-05.

Requirements	Isolated HDPE (ASTM F2164)	Isolated DIP (AWWA C600-05)	Combined HDPE and DIP
Initial Expansion Phase Duration	4 hr	N/A	4 hr
Use of Make-up Water During Initial Expansion Phase	Allowable	N/A	Allowable
Maximum Test Pressure (Expansion Phase)	110 psi	N/A	160 psi
Test Pressure (Test Phase)	100 psi	150 psi	150 psi
Use of Make-up Water During Test Phase	Not Allowed	Allowed	Not Allowed
Test Phase Duration	1 hr	2 hr	2 hr
Allowable Pressure Decrease at End of Test Phase	5%	5 psi	5 psi
Minimum Hydrostatic Pressure Test Duration	5 hr	2 hr	6 hr

A. PRE-PRESSURE TESTING PHASE:

1. SAFETY PRECAUTIONS SHALL FOLLOW ASTM F2164 AND AWWA C600-05.
2. FILL THE TEST SECTION SLOWLY. PURGE ALL AIR. TAKE ALL APPROPRIATE PRECAUTION TO ENSURE THAT NO AIR IS TRAPPED IN THE TEST SECTION. USE AIR RELEASE VALVES OR CORPORATION STOPS TO ALLOW BLEEDING OF TRAPPED AIR, PRIOR TO BEGINNING THE TEST. ALLOW THE TEST SECTION AND THE TEST LIQUID TO EQUALIZE TO A COMMON TEMPERATURE..

VERTICAL DATUM INFORMATION
ALL ELEVATIONS SHOWN ARE IN NORTH AMERICAN VERTICAL DATUM OF 1988 (NAVD88)

Sunshine 811
Call 811 or visit sunshine811.com two full business days before digging to have buried facilities located and marked.
Check positive response codes before you dig!

BID SET

cma
chen moore and associates
500 West Cypress Creek Road
Suite 600
Ft. Lauderdale, FL 33309
954.730.0707
www.chenmoore.com

REGISTRATION
DAVID EDGARDO CASTRO FELIU, PE
LICENSE NO. 85558
DATE: 11/08/24

DAVID EDGARDO CASTRO FELIU
LICENSE
No. 85558
STATE OF FLORIDA
PROFESSIONAL ENGINEER

THIS SEAL IS ONLY VALID ON PRINTED COPIES THAT ARE DATED WITH THE LICENSEE'S ORIGINAL HAND SIGNATURE. SCANNED OR ELECTRONIC COPIES ARE NOT CONSIDERED SIGNED AND SEALED.

CLIENT
pompano beach
Florida's Warmest Welcome
CITY OF POMPANO BEACH
100 WEST ATLANTIC BOULEVARD
POMPANO BEACH, FL 33060
Phone: 954.786.4600

PROJECT INFORMATION
NON SEWER AREA C SANITARY SEWER IMPROVEMENTS
POMPANO BEACH, FL

PROJECT NUMBER
23-0092.00085

CLIENT PROJECT NUMBER
P331425

VERIFY SCALES
0 1"
IF NOT ONE INCH ON THIS SHEET, ADJUST SCALES ACCORDINGLY

REVISIONS

DATE OF ISSUE
11/08/24

DESIGNED BY
DC

DRAWN BY
JT

CHECKED BY
DC

DRAWING TITLE
GENERAL NOTES

DRAWING NUMBER
GN-4
05 OF 43

Plot Date: 11/16/2024 12:10:08 AM Username: jspicer Layout Name: GN-4
Folder Path: V:\Projects\2023\23-0092.00085 - area c sanitary sewer design services\Design\CAD\Sheets Filename: 23-0092.00085 General Notes.dwg

GENERAL ABBREVIATIONS

ABRV	DESCRIPTION	ABRV	DESCRIPTION
A/C	AIR CONDITION PAD	NTS	NOT TO SCALE
ACP	ASBESTOS CEMENT PIPE	ORB	OFFICIAL RECORDS BOOK
ALUM	ALUMINUM	O / S	OFF SET
APPROX	APPROXIMATELY	(P)	PLAT
BCR	BROWARD COUNTY RECORDS	P.B.	PLAT BOOK
B/L	BASELINE	P.B.C.R.	PALM BEACH COUNTY RECORDS
BOTT	BOTTOM	PC	POINT OF CURVE
(C)	CALCULATED	PCP	PERMANENT CONTROL POINT
CIP	CAST IRON PIPE	PG(S)	PAGES
℄	CENTER LINE	PHDPE	PERFORATED HIGH DENSITY POLYETHYLENE
CONC	CONCRETE	PI	POINT OF INTERSECTION
D	DEED/DESCRIPTION	PK&D	PK NAIL AND DISK
D.E.	DRAINAGE EASEMENT	PRC	POINT OF REVERSE CURVE
DIA	DIAMETER	PROP	PROPOSED
DIP	DUCTILE IRON PIPE	PRM	PERMANENT REFERENCE MARKER
ELEV	ELEVATION	PSM	PROFESSIONAL SURVEYOR AND MAPPER
EOW	EDGE OF WATER	PT	POINT OF TANGENCY
EP	EDGE OF PAVEMENT	PVC	POLY VINYL CHLORIDE
EXIST	EXISTING	R	RADIUS
FF	FINISHED FLOOR	RCP	REINFORCED CONCRETE PIPE
FND	FOUND	R.E.	RIM ELEVATION
FPL	FLORIDA POWER & LIGHT	RGE	RANGE
GFF	GARAGE FINISHED FLOOR	R/W	RIGHT-OF-WAY LINE
HDPE	HIGH DENSITY POLYETHYLENE	SEC	SECTION
I.E.	INVERT ELEVATION	TOB	TOP OF BANK
IR	IRON ROD	TOE	TOE OF SLOPE
IR&C	IRON ROD AND CAP	TOP	TOP OF PIPE
IP	IRON PIPE	TWP	TOWNSHIP
L	ARC LENGTH	TYP	TYPICAL
LB	LICENSED BUSINESS	U.E.	UTILITY EASEMENT
LF	LINEAR FEET	VCP	VITRIFIED CLAY PIPE
(M)	MEASURED	△	DELTA

STANDARD LINETYPES

SYMBOL	DESCRIPTION	SYMBOL	DESCRIPTION
	BASELINE	BTC	BURIED TRAFFIC CONTROL
	PARCEL LINE	<C> <C>	COMMUNICATIONS DUCTBANK CL
	BOUNDARY LINE	<F>	FIBER OPTIC DUCTBANK CL
	EASEMENT LINE		OVERHEAD WIRE
	LOT LINE	BE	BURIED ELECTRIC
	RIGHT OF WAY LINE	SL	BURIED STREET LIGHTING
	CENTER LINE	<E>	ELECTRICAL DUCTBANK CENTER LINE
	SECTION LINE	FM	FORCE MAIN
	LANDSCAPE LINE		SANITARY SEWER
	EDGE OF WATER	SNS	SANITARY SERVICE
	RR TRACKS	VS	VACUUM SEWER
	PLAT LINE	SD	STORM DRAIN
	CURB & GUTTER	FIRE	FIRE LINE
X X X X	FENCE LINE	RWL	RAW WATER LINE
	GUARD RAIL	WL	WATER LINE MAIN
UNK	UNKNOWN UTILITY	WLC	WATER LINE CHILLED
	ABANDONED UTILITY	WS	WATER SERVICE
NFVU	NON FIELD VERIFIED UTILITY		IRRIGATION LINE
BCTV	BURIED CABLE TV		GAS LINE ABOVE GROUND
BCL BCL	BURIED COMMUNICATIONS LINE	BG	BURIED GAS LINE
FOC	FIBER OPTIC CABLE	GS	BURIED GAS SERVICE LINE
BT	BURIED TELEPHONE	FUEL	FUEL LINE

GENERAL SYMBOL LEGEND

	SYM.	DESCRIPTION
CONTROL		AERIAL TARGET
		BENCH MARK
		CONCRETE MONUMENT
		IRON PIPE
		IRON ROD
	ND	NAIL & DISC
		TRAVERSE POINT
		IRON ROD AND CAP
		X CUT
	GPR	GROUND PENETRATING RADAR
PIPE FITTINGS		11.25° PIPE BEND
		22.5° PIPE BEND
		45° PIPE BEND
		90° PIPE BEND
		CROSS PIPE FITTING
		TEE PIPE FITTING
		WYE PIPE FITTING
		REDUCER PIPE FITTING
ELECTRICAL	EMH	ELECTRIC MANHOLE
	EMTR	ELECTRIC MOTOR
		ELECTRICAL OUTLET
		GROUND LIGHT
	EJB	ELECTRIC JUNCTION BOX
	EM	ELECTRIC METER
	LPB	LIGHT POLE BOX
	TCB	TRAFFIC CONTROL BOX
	ER	ELECTRICAL RISER
	T FPL	TRANSFORMER
	CW	CROSSWALK POST
UTILITY POLES		GUY WIRE
		GUY POLE
		LIGHT POLE
		CONCRETE UTILITY POLE
		METAL UTILITY POLE
		WOOD UTILITY POLE
		MAST ARM POLE
SAN SWR	CO	CLEAN OUT
	SMH	SANITARY MANHOLE
	SO	STUB OUT
	S	STAND PIPE
	SV	SEWER VALVE
	GRND	GRINDER
STORM	CB	CATCH BASIN
	SDMH	STORM DRAIN MANHOLE
	YD	YARD DRAIN
	DR	DRAIN
		CURB INLET
		CURB INLET W/ MANHOLE
		CURB INLET W/ GRATE
		CI W/ MANHOLE & GRATE

	SYM.	DESCRIPTION
GAS / FUEL	GM	GAS METER
	GMH	GAS MANHOLE
	GSV	GAS VALVE
	MW	MONITORING WELL
	VEP	VAPOR EXTRACTION POINT
	GSP	FUEL PUMP DISPENSER
	GASM	GAS MARKER
	VTP	VENT PIPE
	VBG	GAS VALVE BOX
	FCAP	FUEL FILL CAP
TELE/ TV	PJB	TELEPHONE JUNCTION BOX
	PR	TELEPHONE RISER
	TMH	TELEPHONE MANHOLE
	FIBO	FIBER OPTIC CABLE MARKER
	CATV	CATV RISER
	TM	TELEPHONE MARKER
WATER / IRRIGATION		BACKFLOW PREVENTOR
	BO	BLOW OFF
	ARV	AIR RELEASE VALVE
	SP	SAMPLE POINT
	FH	FIRE HYDRANT
	SIA	SIAMESE CONNECTION
	WM	WATER METER
	WV	WATER VALVE
		WATER SPIGOT
	ICV	IRRIGATION CONTROL VALVE
	IM	IRRIGATION METER
	SPR	SPRINKLER
TREES	12	CITRUS TREE (TRC)
		CYPRESS TREE (TRCY)
	12	GENERIC TREE (TRG)
	12	OAK TREE (TRO)
	12	PINE TREE (TRP)
	12	PALM TREE (TRPL)
		MANGROVE (TRMG)
MISCELLANEOUS	GPR	GROUND PENETRATING RADAR
		BORING HOLE
	M	METER (UNKNOWN)
		BOLLARD
		COLUMN
	MB	MAIL BOX
	FP	FLAG POLE
		HANDICAP MARKER
	MH	MANHOLE (UNKNOWN)
		SATELLITE DISH
		SIGN
	PM	PARKING METER
		POST
	UB	UTILITY BOX
	UR	UTILITY RISER
		CEMETERY HEAD STONE
	HH	HAND HOLE
		GATE POST
	TC	TRASH CAN
	NPB	NEWSPAPER BOX
	BR	BIKE RACK
	PP	PAY PHONE

HATCH PATTERNS

	CONCRETE		STONE
	BRICK		ASPHALT

SURVEYOR'S NOTES:

1. REPRODUCTIONS OF THIS SURVEY ARE NOT VALID WITHOUT THE SIGNATURE AND ORIGINAL RAISED SEAL OF A FLORIDA LICENSED SURVEYOR AND MAPPER.
2. NO SEARCH OF THE PUBLIC RECORDS WAS UNDERTAKEN FOR EASEMENTS, RIGHTS OF WAYS, RESTRICTIONS OR OTHER RECORDED OR EVIDENCE OF UNRECORDED DOCUMENTS BY THIS FIRM, NOR WERE ANY SUCH RECORDS SUPPLIED. A LIMITED SEARCH OF THE BROWARD COUNTY PROPERTY APPRAISER'S WEBSITE WAS PERFORMED FOR VARIOUS DEED AND PLAT INFORMATION. A "BEST FIT" APPROACH WAS TAKEN FOR THE ESTABLISHMENT OF THE VARIOUS SUBDIVISIONS AND UNPLATTED LANDS SHOWN HEREON. THE RIGHT OF WAY SHOWN FOR POWERLINE ROAD IS BASED ON MISC. MAP BOOK 5, PAGE 28, RECORDED IN THE PUBLIC RECORDS OF BROWARD COUNTY, FLORIDA.
3. THE INTENT OF THIS "MAP OF SPECIFIC PURPOSE SURVEY" IS TO AID IN THE PLANNING OF FUTIURE DESIGN OF SANITARY SEWER IMPROVEMENTS WITHIN THE CORRIDORS SHOWN HEREON. THIS IS NOT A BOUNDARY SURVEY.
4. THERE MAY BE UNDERGROUND "FOOTINGS", DRAINAGE, UTILITIES, ETC. NOT SHOWN OR INDICATED HEREON. UTILITY SURFACE MARKINGS AND GROUND PENETRATING RADAR DEPTHS SHOWN HEREON WERE LOCATED AS PROVIDED BY THE CRAIG A. SMITH & ASSOCIATES UTILITY LOCATES DEPARTMENT. UTILITY INFORMATION FOR THE TEST HOLES WAS PROVIDED TO THE SURVEYOR.
5. HORIZONTAL COORDINATES SHOWN HEREON ARE RELATIVE TO THE FLORIDA STATE PLANE COORDINATE GRID SYSTEM, EAST ZONE, NORTH AMERICAN DATUM OF 1983 (2011 ADJUSTMENT). REDUNDANT MEASUREMENTS WERE UTILIZED TO ESTABLISH HORIZONTAL COORDINATE VALUES OF THE CRAIG A. SMITH & ASSOCIATES (CAS) CONTROL POINTS LISTED BELOW. ELEVATIONS SHOWN HEREON ARE RELATIVE TO NORTH AMERICAN VERTICAL DATUM OF 1988 AND BASED ON DIFFERNTIAL LEVELING FROM BROWARD COUNTY PUBLISHED BENCHMARK 2390, ELEVATION 10.91'. SAID CONTROL POINTS (CP) ARE LISTED BELOW:

CP	NORTHING	EASTING	ELEVATION	DESCRIPTION
BM 2390	696575.31	934189.71	10.91	X-CUT IN CATCH BASIN
CAS 2	696975.38	934163.59	11.65	MND LB 3110
CAS 3	697339.10	934168.16	11.14	MND LB 3110
CAS 4	697877.01	934153.91	12.09	MND LB 3110
CAS 5	698534.03	934134.31	11.63	MND LB 3110
CAS 6	698541.05	934894.27	11.33	FOUND N&D NO ID
CAS 7	698559.15	935266.69	11.19	IRC LB 3110
CAS 8	698572.85	936183.13	11.66	IRC LB 3110
CAS 9	698543.15	936564.19	12.40	MND LB 3110
CAS 10	698231.20	935272.39	10.48	MND LB 3110
CAS 11	698185.37	934891.05	12.52	MND LB 3110
CAS 12	697809.96	934913.02	11.87	MND LB 3110
CAS 13	697835.81	935260.78	9.21	MND LB 3110

6. ALL SYMBOLS ARE SHOWN FOR REPRESENTATION PURPOSES ONLY AND ARE NOT TO SCALE.
7. FINISHED FLOOR ELEVATIONS SHOWN HEREON WERE TAKEN AT THE DOORWAY THRESHOLD. NO SEARCH WAS PERFORMED FOR ANY LOWER "SUNKEN" FLOORS OR HIGHER RAISED FLOORS WITHIN ANY STRUCTURE.
8. THE ACCURACY OF THIS SURVEY IS PREMISED ON THE EXPECTED USE OF THE SURVEY. THE EXPECTED USE/PREMISE OF THIS SURVEY IS THE PRELMINARY LAYOUT OF SANITARY SEWER WHERE NONE EXISTS. TRIMBLE R2 AND R6 GNSS INSTRUMENTS WITH TRIMBLE TSC-3 DATA COLLECTION WERE UTILIZED TO ESTABLISH HORIZONTAL CONTROL AND LOCATE MISC. FEATURES HORIZONTALLY. A TOPCON ES-102 INSTRUMENT WITH RANGER (TDS) DATA COLLECTION WAS UTILIZED TO COLLECT DATA IN BOTH THE HORIZONTAL AND VERTICAL PLANES. WILD NA2 LEVEL AS WERE USED FOR DIFFERENTIAL LEVELING THROUGH CONTROL POINTS.
9. THE DIGITAL DATA PROVIDED IS INTENDED TO BE VIEWED AT A SCALE OF 1" = 30' OR SMALLER.
10. ALL DISTANCES AND ELEVATIONS SHOWN HEREON ARE IN ACCORD WITH THE UNITED STATES STANDARD USING FEET AND DECIMALS THEREOF.

SURVEYORS CERTIFICATE:

I HEREBY CERTIFY THAT THIS SURVEY IS ACCURATE TO THE BEST OF MY KNOWLEDGE AND BELIEF AND MEETS APPLICABLE SECTIONS OF THE STANDARDS OF PRACTICE AS SET FORTH BY THE FLORIDA BOARD OF PROFESSIONAL SURVEYORS AND MAPPERS IN CHAPTER 5J-17, FLORIDA ADMINISTRATIVE CODE, PURSUANT TO SECTION 472.027, FLORIDA STATUTES, SUBJECT TO QUALIFICATIONS NOTED HEREON.

FOR THE FIRM BY: _____
ROBERT D. KEENER
PROFESSIONAL SURVEYOR & MAPPER
FLORIDA REGISTRATION NO. 4846

FIELD DATE: 12/10/2020

SIGNATURE DATE: _____

VERTICAL DATUM INFORMATION
ALL ELEVATIONS SHOWN ARE IN NORTH AMERICAN VERTICAL DATUM OF 1988 (NAVD88)

Sunshine 811
Call 811 or visit sunshine811.com two full business days before digging to have buried facilities located and marked.
Check positive response codes before you dig!

BID SET

cma
chen moore and associates
500 West Cypress Creek Road
Suite 600
Ft. Lauderdale, FL 33309
954.730.0707
www.chenmoore.com

REGISTRATION
DAVID EDGARDO CASTRO FELIU, PE
LICENSE NO. 85558
DATE: 11/08/24

DAVID EDGARDO CASTRO FELIU LICENSE No. 85558 STATE OF FLORIDA PROFESSIONAL ENGINEER

THIS SEAL IS ONLY VALID ON PRINTED COPIES THAT ARE DATED WITH THE LICENSEE'S ORIGINAL HAND SIGNATURE. SCANNED OR ELECTRONIC COPIES ARE NOT CONSIDERED SIGNED AND SEALED.

CLIENT
pompano beach
Florida's Warmest Welcome
CITY OF POMPANO BEACH
100 WEST ATLANTIC BOULEVARD
POMPANO BEACH, FL 33060
Phone: 954.786.4600

PROJECT INFORMATION

NON SEWER AREA C SANITARY SEWER IMPROVEMENTS

POMPANO BEACH, FL

PROJECT NUMBER 23-0092.00085

CLIENT PROJECT NUMBER P331425

VERIFY SCALES
0 1"
IF NOT ONE INCH ON THIS SHEET, ADJUST SCALES ACCORDINGLY

REVISIONS

DATE OF ISSUE 11/08/24

DESIGNED BY DC

DRAWN BY JT

CHECKED BY DC

DRAWING TITLE

LEGEND AND ABBREVIATIONS

DRAWING NUMBER
GN-5
06 OF 43

Plot Date: 11/16/2024 12:10:11 AM Username: jspicer Layout Name: GN-5
Folder Path: V:\Projects\2023\23-0092.00085 - area c sanitary sewer design services\Design\CAD\Sheets Filename: 23-0092.00085 General Notes.dwg

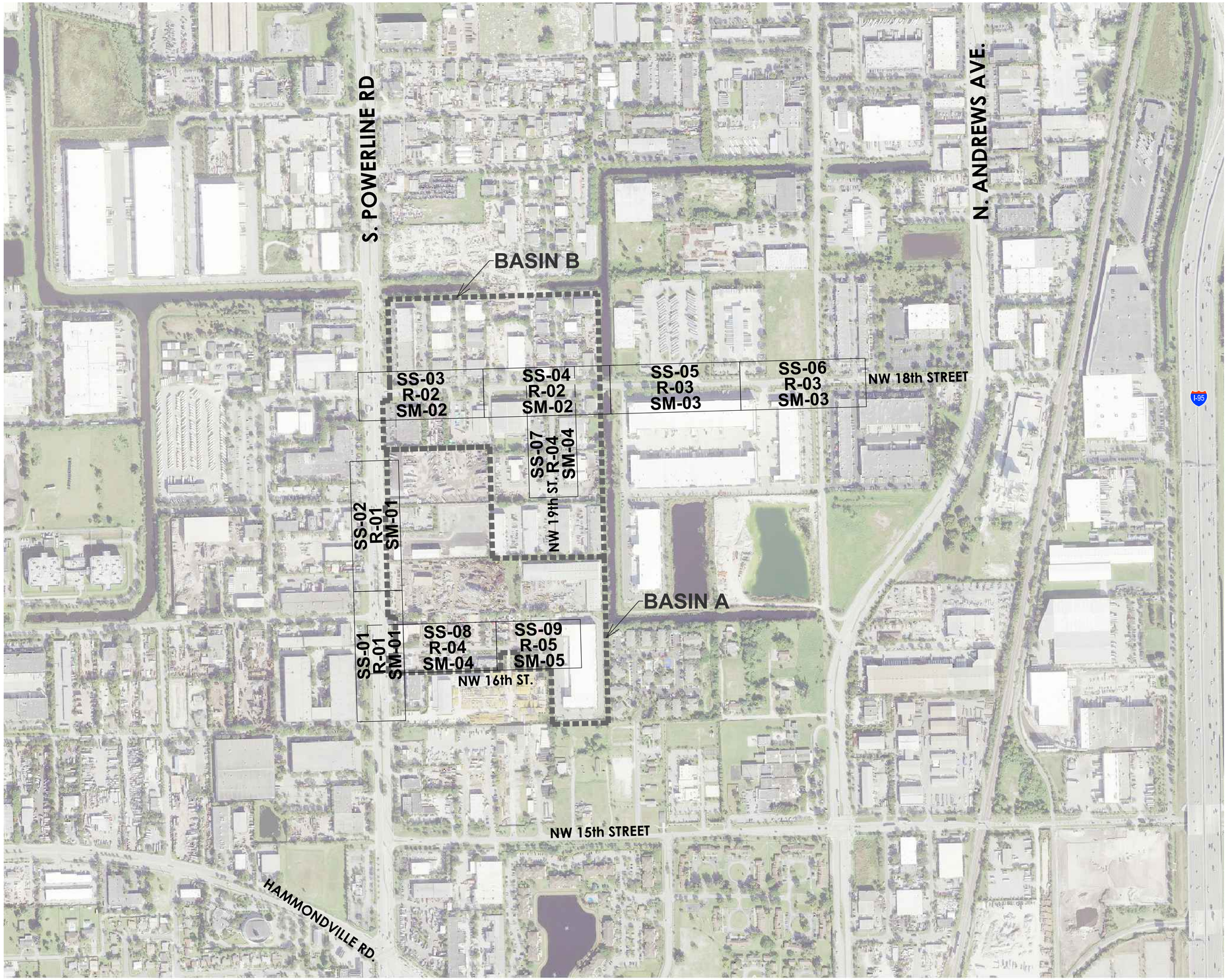

N

GRAPHIC SCALE

0 150 300 600

1 INCH = 300 FEET

VERTICAL DATUM INFORMATION
ALL ELEVATIONS SHOWN ARE IN NORTH AMERICAN VERTICAL DATUM OF 1988 (NAVD88)

Sunshine 811

Call 811 or visit sunshine811.com two full business days before digging to have buried facilities located and marked.

Check positive response codes before you dig!

BID SET

cma
chen moore and associates
500 West Cypress Creek Road
Suite 600
Ft. Lauderdale, FL 33309
954.730.0707
www.chenmoore.com

REGISTRATION
DAVID EDGARDO CASTRO FELIU, PE
LICENSE NO. **85558**
DATE: 11/08/24

DAVID EDGARDO CASTRO FELIU
LICENSE
No. 85558
STATE OF FLORIDA
PROFESSIONAL ENGINEER

THIS SEAL IS ONLY VALID ON PRINTED COPIES THAT ARE DATED WITH THE LICENSEE'S ORIGINAL HAND SIGNATURE. SCANNED OR ELECTRONIC COPIES ARE NOT CONSIDERED SIGNED AND SEALED.

CLIENT
pompano beach
Florida's Warmest Welcome
CITY OF POMPANO BEACH
100 WEST ATLANTIC BOULEVARD
POMPANO BEACH, FL 33060
Phone: 954.786.4600

PROJECT INFORMATION

NON SEWER AREA C SANITARY SEWER IMPROVEMENTS

POMPANO BEACH, FL

PROJECT NUMBER
23-0092.00085

CLIENT PROJECT NUMBER
P331425

VERIFY SCALES
0 1"
IF NOT ONE INCH ON THIS SHEET, ADJUST SCALES ACCORDINGLY

REVISIONS

DATE OF ISSUE
11/08/24

DESIGNED BY
DC

DRAWN BY
JT

CHECKED BY
DC

DRAWING TITLE

KEY SHEET

DRAWING NUMBER
K-1
07 OF 43

Plot Date: 11/16/2024 12:10:37 AM Username: jspicer Layout Name: K-1
Folder Path: V:\Projects\2023\23-0092.00085 - area c sanitary sewer design services\Design\CAD\Sheets Filename: 23-0092.00085 Keysheet.dwg

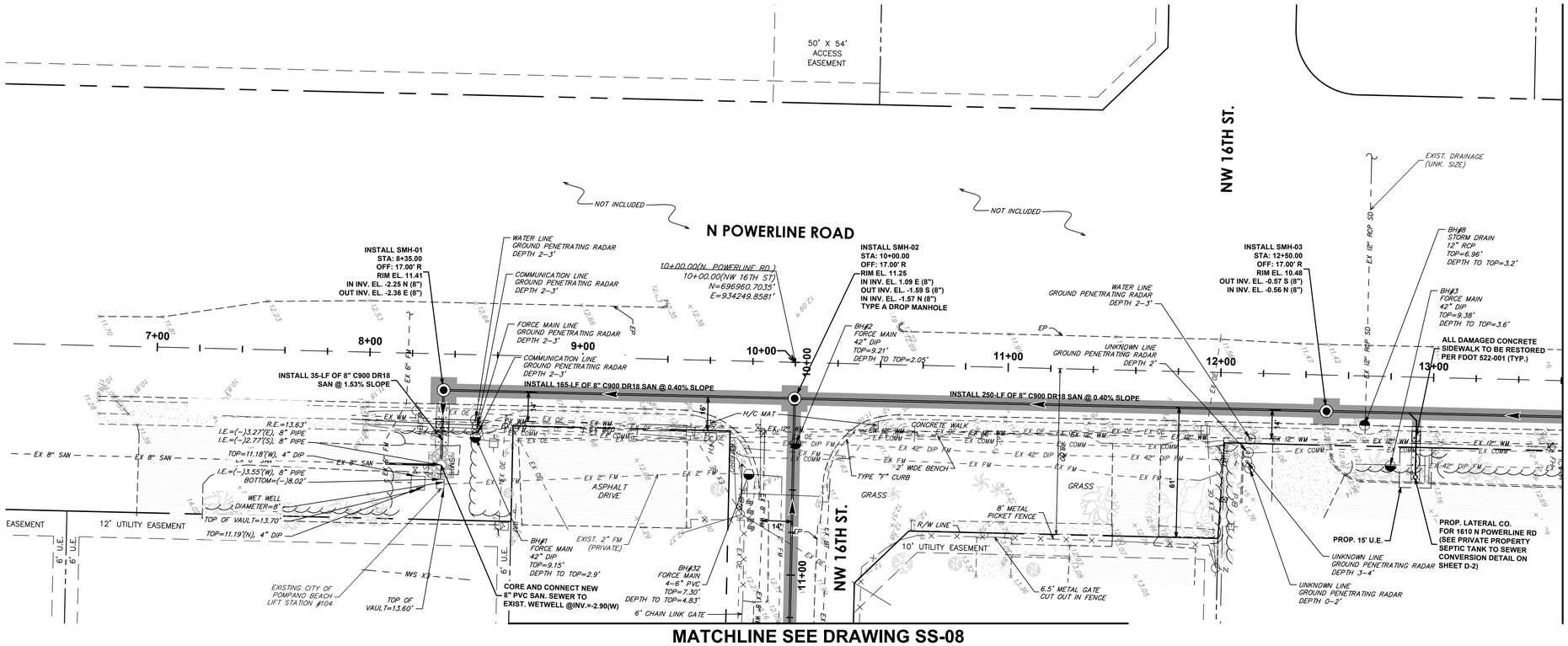

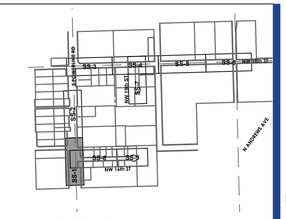

KEY MAP
N.T.S.

GRAPHIC SCALE
0 15 30 60
1 INCH = 30 FEET

POWERLINE ROAD (FDOT) RESTORATION REQUIREMENTS:

CONSTRUCTION IN STATE ROADS (POWERLINE ROAD), WILL REQUIRE FULL LANE WIDTH RESTORATION (INCLUDING BIKE LANE) ALONG THE PROPOSED PARALLEL UTILITY INSTALLATION AND 50' PAVEMENT RESTORATION EITHER DIRECTION FROM TRENCH LIMITS FOR PERPENDICULAR INSTALLATIONS. PAVEMENT RESTORATION WILL BE IN ACCORDANCE WITH FDOT STANDARDS INDEX NO. 125-001. (FLEXIBLE PAVEMENT CUT).
(SEE SHEET R-1 FOR ADDITIONAL RESTORATION REQUIREMENT IN FDOT R/W).

SMH-01 to WETWELL

SCALE: 1"=30' HORZ | 1"=3' VERT

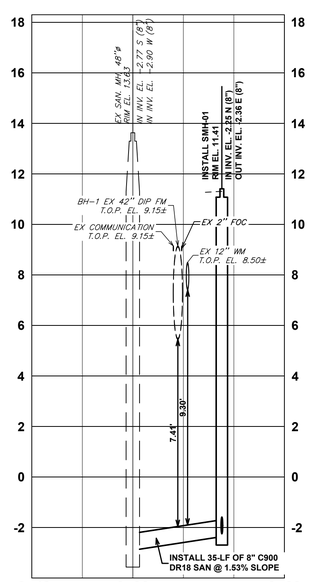

N POWERLINE RD

SCALE: 1"=30' HORZ | 1"=3' VERT

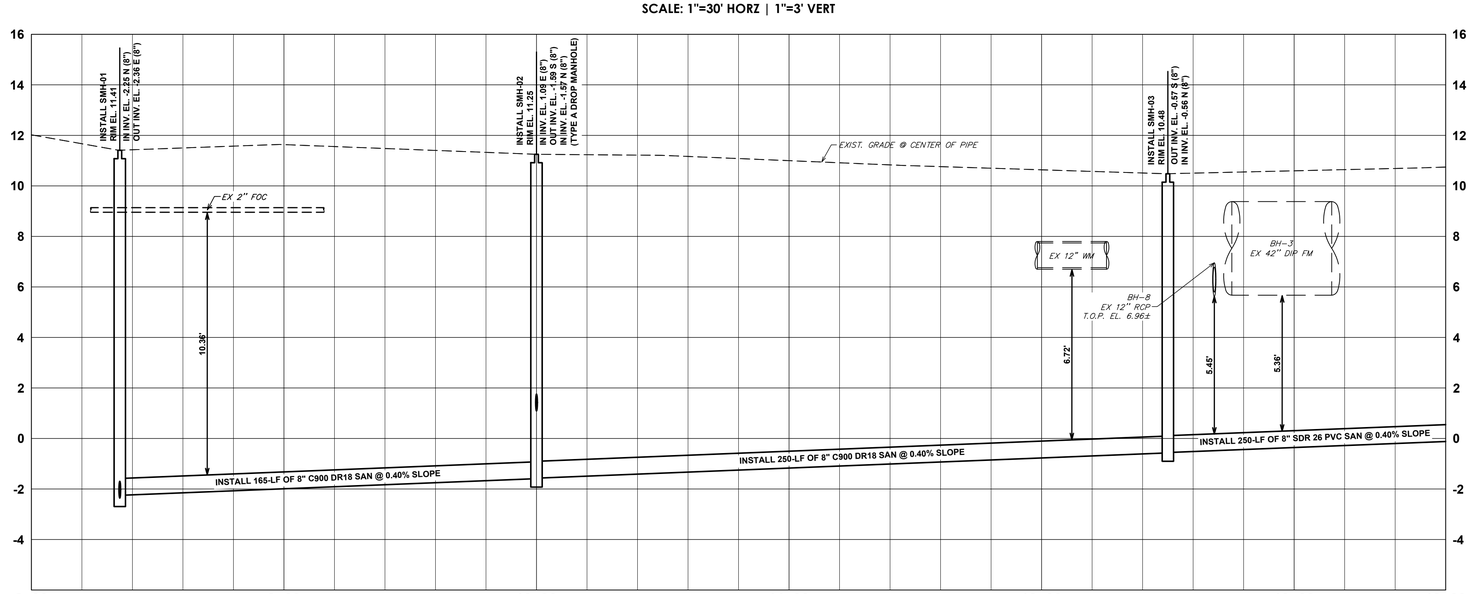

GENERAL NOTES:

1. PROPOSED IMPROVEMENTS ARE IN CLOSE PROXIMITY TO VARIOUS EXISTING UTILITIES. CONTRACTOR IS TO COORDINATE WITH UTILITY COMPANY TO RELOCATE THE UTILITY TO NOT CONFLICT WITH PROPOSED IMPROVEMENTS.
2. THE EXISTENCE AND LOCATION OF ANY UTILITIES SHOWN ON THESE PLANS MUST BE VERIFIED IN THE FIELD BY THE CONTRACTOR PRIOR TO CONSTRUCTION.
3. ALL EXISTING PAVEMENT MARKINGS & SIGNAGE DAMAGED DURING CONSTRUCTION MUST BE REPLACED/RESTORED TO MATCH EXISTING AND BE IN ACCORDANCE WITH MUTCD & APPLICABLE COUNTY, FDOT AND OR CITY TRAFFIC ENGINEERING DEPARTMENT MINIMUM STANDARDS.
4. DEFLECTION OF FRANCHISE UTILITIES TO BE PERFORMED BY SERVICE PROVIDER. CONTRACTOR TO CONTACT THE UTILITY SERVICE PROVIDER AND COORDINATE ANY UTILITY RELOCATIONS REQUIRED.
5. CONTRACTOR TO PROVIDE TEMPORARY SHORING/SHEET PILING TO PROTECT EXISTING INFRASTRUCTURE AS NECESSARY. COSTS ARE TO BE CONSIDERED INCIDENTAL TO THE INSTALLATION OF THE NEW SEWER SYSTEM.
6. ALL RESTORATION REQUIRED IS TO BE CONSIDERED INCIDENTAL TO THE PROPOSED SEWER SYSTEM PIPELINE COSTS AND ADDRESSED IN THE PIPELINE RELATED BID ITEMS.
7. ALL PROPOSED WORK REQUIRING RESTORATION WITHIN FDOT R/W (POWERLINE RD.) IS TO BE IN ACCORDANCE WITH FDOT SPECIFICATIONS AND STANDARDS, LATEST EDITIONS.
8. ANY EXISTING DRIVEWAYS (ASPHALT OR CONCRETE) DAMAGED AS A RESULT OF THE PROPOSED IMPROVEMENTS SHALL BE RESTORED TO MATCH EXISTING TYPE (ASPHALT OR CONCRETE) AND MATCH EXISTING THICKNESS. ASPHALT DRIVEWAYS TO BE A MINIMUM 1-1/2" SP 9.5 ASPHALT OVER MIN. 8" COMPACTED LIMEROCK AND COMPACTED SUBGRADE. CONCRETE DRIVEWAYS SHALL BE MIN. 6" THICK (3,000 PSI MIN./28 DAYS) UNREINFORCED OVER MIN. 4" COMPACTED SAND BASE. COMPACTION TO BE AT LEAST 98% OF THE MAXIMUM DENSITY PER AASHTO T-180 & LBR 40 MIN. SEE FDOT STANDARD INDEX 000-515. DRIVEWAY RESTORATION TO BE CONSIDERED INCIDENTAL TO THE PROPOSED SEWER SYSTEM PIPELINE COSTS IN THE BID.
9. CONTRACTOR TO AVOID IMPACTS TO EXIST. UTILITIES AND EXIST. TREES TO THE GREATEST EXTENT PRACTICAL. CONTRACTOR SHALL COORDINATE ALL REQUIRED FIELD ADJUSTMENTS WITH CITY AND ENGINEER.
10. ALL NEW TREES OR RELOCATED TREES ARE TO BE AT LEAST 5' MINIMUM HORIZONTAL SEPARATION FROM UTILITIES.
11. ALL TREES WITHIN WORK LIMITS SHALL BE PROTECTED PER CITY STANDARDS.

VERTICAL DATUM INFORMATION
ALL ELEVATIONS SHOWN ARE IN NORTH AMERICAN VERTICAL DATUM OF 1988 (NAVD88)

Sunshine 811
Call 811 or visit sunshine811.com two full business days before digging to have buried facilities located and marked.
Check positive response codes before you dig!

BID SET

cma
chen moore and associates
500 West Cypress Creek Road
Suite 600
Ft. Lauderdale, FL 33309
954.730.0707
www.chenmoore.com

REGISTRATION
DAVID EDGARDO CASTRO FELIU, PE
LICENSE NO. 85558
DATE: 01/22/25

DAVID EDGARDO CASTRO FELIU LICENSE No. 85558 STATE OF FLORIDA PROFESSIONAL ENGINEER

THIS SEAL IS ONLY VALID ON PRINTED COPIES THAT ARE DATED WITH THE LICENSEE'S ORIGINAL HAND SIGNATURE. SCANNED OR ELECTRONIC COPIES ARE NOT CONSIDERED SIGNED AND SEALED.

CLIENT
pompano beach
Florida's Warmest Welcome
CITY OF POMPANO BEACH
100 WEST ATLANTIC BOULEVARD
POMPANO BEACH, FL 33060
Phone: 954.786.4600

PROJECT INFORMATION

NON SEWER AREA C SANITARY SEWER IMPROVEMENTS

POMPANO BEACH, FL

PROJECT NUMBER 23-0092.00085
CLIENT PROJECT NUMBER P331425
VERIFY SCALES 0 — 1"
IF NOT ONE INCH ON THIS SHEET, ADJUST SCALES ACCORDINGLY
REVISIONS

DATE OF ISSUE 01/22/25
DESIGNED BY DC
DRAWN BY JT
CHECKED BY DC
DRAWING TITLE
SANITARY PLAN AND PROFILE

DRAWING NUMBER
SS-1
08 OF 43

Plot Date: 1/22/2025 5:20:30 PM Username: dcastro Layout Name: SS-1
Folder Path: V:\Projects\2023\23-0092.00085 - area c sanitary sewer design services\Design\CAD\Sheets Filename: 23-0092.00085 Force Main.dwg

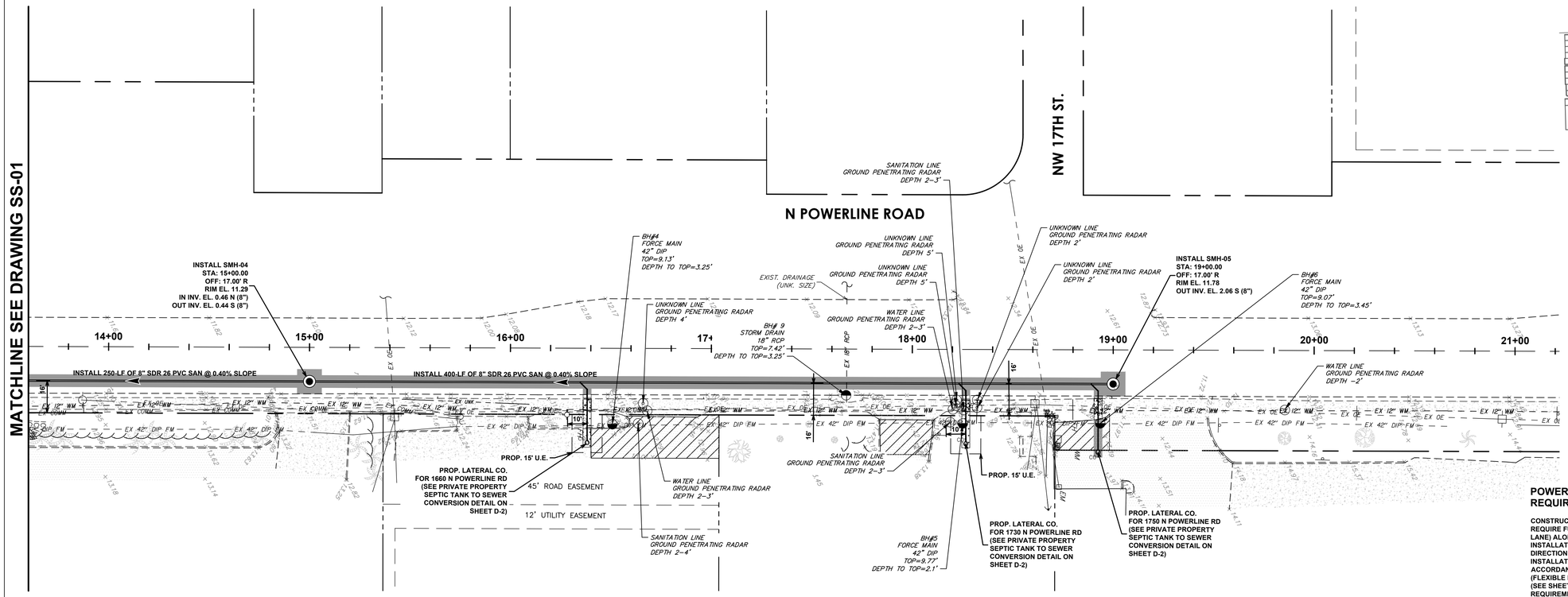

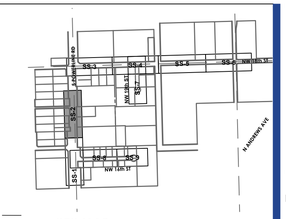

KEY MAP
N.T.S.

GRAPHIC SCALE
0 15 30 60
1 INCH = 30 FEET

POWERLINE ROAD (FDOT) RESTORATION REQUIREMENTS:

CONSTRUCTION IN STATE ROADS (POWERLINE ROAD), WILL REQUIRE FULL LANE WIDTH RESTORATION (INCLUDING BIKE LANE) ALONG THE PROPOSED PARALLEL UTILITY INSTALLATION AND 50' PAVEMENT RESTORATION EITHER DIRECTION FROM TRENCH LIMITS FOR PERPENDICULAR INSTALLATIONS. PAVEMENT RESTORATION WILL BE IN ACCORDANCE WITH FDOT STANDARDS INDEX NO. 125-001. (FLEXIBLE PAVEMENT CUT).
(SEE SHEET R-1 FOR ADDITIONAL RESTORATION REQUIREMENT IN FDOT R/W).

N POWERLINE RD

SCALE: 1"=30' HORZ | 1"=3' VERT

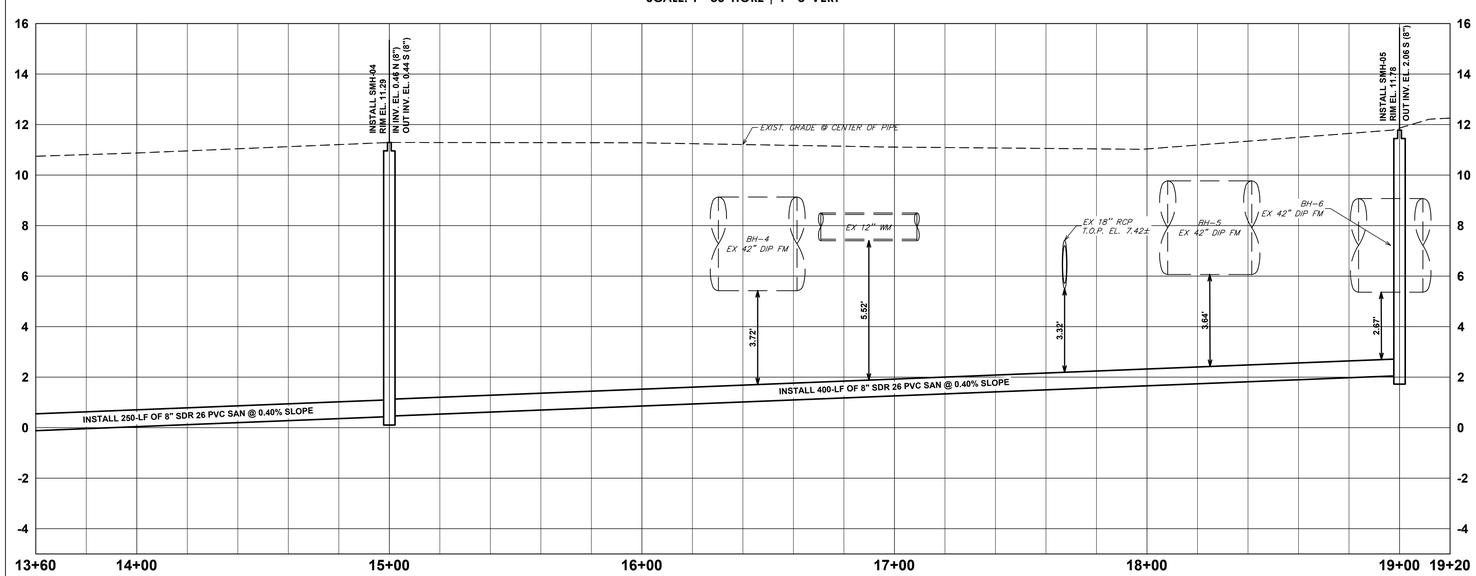

GENERAL NOTES:

1. PROPOSED IMPROVEMENTS ARE IN CLOSE PROXIMITY TO VARIOUS EXISTING UTILITIES. CONTRACTOR IS TO COORDINATE WITH UTILITY COMPANY TO RELOCATE THE UTILITY TO NOT CONFLICT WITH PROPOSED IMPROVEMENTS.
2. THE EXISTENCE AND LOCATION OF ANY UTILITIES SHOWN ON THESE PLANS MUST BE VERIFIED IN THE FIELD BY THE CONTRACTOR PRIOR TO CONSTRUCTION.
3. ALL EXISTING PAVEMENT MARKINGS & SIGNAGE DAMAGED DURING CONSTRUCTION MUST BE REPLACED/RESTORED TO MATCH EXISTING AND BE IN ACCORDANCE WITH MUTCD & APPLICABLE COUNTY, FDOT AND OR CITY TRAFFIC ENGINEERING DEPARTMENT MINIMUM STANDARDS.
4. DEFLECTION OF FRANCHISE UTILITIES TO BE PERFORMED BY SERVICE PROVIDER. CONTRACTOR TO CONTACT THE UTILITY SERVICE PROVIDER AND COORDINATE ANY UTILITY RELOCATIONS REQUIRED.
5. CONTRACTOR TO PROVIDE TEMPORARY SHORING/SHEET PILING TO PROTECT EXISTING INFRASTRUCTURE AS NECESSARY. COSTS ARE TO BE CONSIDERED INCIDENTAL TO THE INSTALLATION OF THE NEW SEWER SYSTEM.
6. ALL RESTORATION REQUIRED IS TO BE CONSIDERED INCIDENTAL TO THE PROPOSED SEWER SYSTEM PIPELINE COSTS AND ADDRESSED IN THE PIPELINE RELATED BID ITEMS.
7. ALL PROPOSED WORK REQUIRING RESTORATION WITHIN FDOT R/W (POWERLINE RD.) IS TO BE IN ACCORDANCE WITH FDOT SPECIFICATIONS AND STANDARDS, LATEST EDITIONS.
8. ANY EXISTING DRIVEWAYS (ASPHALT OR CONCRETE) DAMAGED AS A RESULT OF THE PROPOSED IMPROVEMENTS SHALL BE RESTORED TO MATCH EXISTING TYPE (ASPHALT OR CONCRETE) AND MATCH EXISTING THICKNESS. ASPHALT DRIVEWAYS TO BE A MINIMUM 1-1/2" SP 9.5 ASPHALT OVER MIN. 8" COMPACTED LIMEROCK AND COMPACTED SUBGRADE. CONCRETE DRIVEWAYS SHALL BE MIN. 6" THICK (3,000 PSI MIN./28 DAYS) UNREINFORCED OVER MIN. 4" COMPACTED SAND BASE. COMPACTION TO BE AT LEAST 98% OF THE MAXIMUM DENSITY PER AASHTO T-180 & LBR 40 MIN. SEE FDOT STANDARD INDEX 000-515. DRIVEWAY RESTORATION TO BE CONSIDERED INCIDENTAL TO THE PROPOSED SEWER SYSTEM PIPELINE COSTS IN THE BID.
9. CONTRACTOR TO AVOID IMPACTS TO EXIST. UTILITIES AND EXIST. TREES TO THE GREATEST EXTENT PRACTICAL. CONTRACTOR SHALL COORDINATE ALL REQUIRED FIELD ADJUSTMENTS WITH CITY AND ENGINEER.
10. ALL NEW TREES OR RELOCATED TREES ARE TO BE AT LEAST 5' MINIMUM HORIZONTAL SEPARATION FROM UTILITIES.
11. ALL TREES WITHIN WORK LIMITS SHALL BE PROTECTED PER CITY STANDARDS.

VERTICAL DATUM INFORMATION
ALL ELEVATIONS SHOWN ARE IN NORTH AMERICAN VERTICAL DATUM OF 1988 (NAVD88)

Sunshine 811
Call 811 or visit sunshine811.com two full business days before digging to have buried facilities located and marked.
Check positive response codes before you dig!

BID SET

cma
chen moore and associates
500 West Cypress Creek Road
Suite 600
Ft. Lauderdale, FL 33309
954.730.0707
www.chenmoore.com

REGISTRATION
DAVID EDGARDO CASTRO FELIU, PE
LICENSE NO. 85558
DATE: 01/22/25

DAVID EDGARDO CASTRO FELIU
LICENSE
No. 85558
STATE OF FLORIDA
PROFESSIONAL ENGINEER

THIS SEAL IS ONLY VALID ON PRINTED COPIES THAT ARE DATED WITH THE LICENSEE'S ORIGINAL HAND SIGNATURE. SCANNED OR ELECTRONIC COPIES ARE NOT CONSIDERED SIGNED AND SEALED.

CLIENT
pompano beach
Florida's Warmest Welcome
CITY OF POMPANO BEACH
100 WEST ATLANTIC BOULEVARD
POMPANO BEACH, FL 33060
Phone: 954.786.4600

PROJECT INFORMATION

NON SEWER AREA C SANITARY SEWER IMPROVEMENTS

POMPANO BEACH, FL

PROJECT NUMBER
23-0092.00085

CLIENT PROJECT NUMBER
P331425

VERIFY SCALES
0 1"
IF NOT ONE INCH ON THIS SHEET, ADJUST SCALES ACCORDINGLY

REVISIONS

DATE OF ISSUE
01/22/25

DESIGNED BY
DC

DRAWN BY
JT

CHECKED BY
DC

DRAWING TITLE

SANITARY PLAN AND PROFILE

DRAWING NUMBER
SS-2
09 OF 43

Plot Date: 1/22/2025 5:20:41 PM Username: dcastro Layout Name: SS_2
Folder Path: V:\Projects\2023\23-0092.00085 - area c sanitary sewer design services\Design\CAD\Sheets Filename: 23-0092.00085 Force Main.dwg

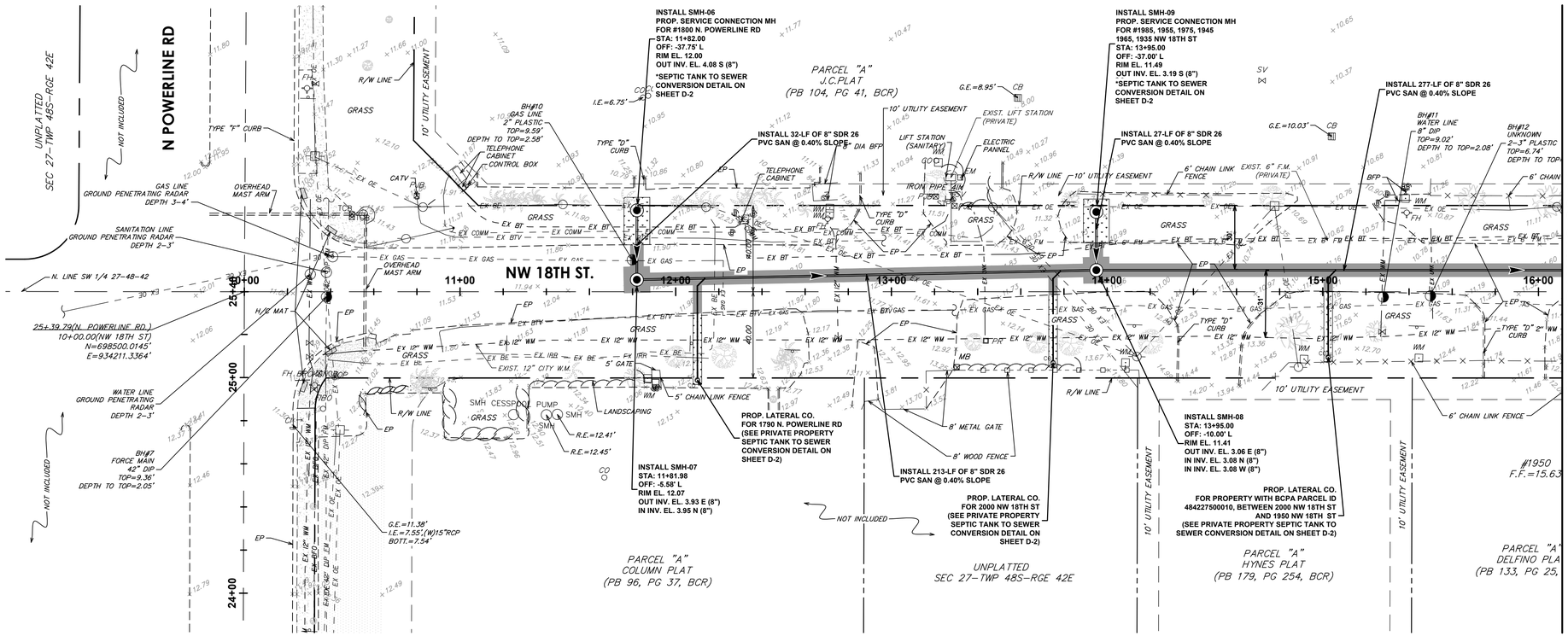

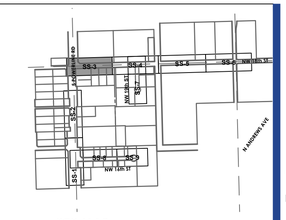

KEY MAP
N.T.S.

N

GRAPHIC SCALE
0 15 30 60
1 INCH = 30 FEET

POWERLINE ROAD (FDOT) RESTORATION REQUIREMENTS:

CONSTRUCTION IN STATE ROADS (POWERLINE ROAD), WILL REQUIRE FULL LANE WIDTH RESTORATION (INCLUDING BIKE LANE) ALONG THE PROPOSED PARALLEL UTILITY INSTALLATION AND 50' PAVEMENT RESTORATION EITHER DIRECTION FROM TRENCH LIMITS FOR PERPENDICULAR INSTALLATIONS. PAVEMENT RESTORATION WILL BE IN ACCORDANCE WITH FDOT STANDARDS INDEX NO. 125-001. (FLEXIBLE PAVEMENT CUT).
(SEE SHEET R-1 FOR ADDITIONAL RESTORATION REQUIREMENT IN FDOT R/W).

SMH-06 to SMH-07

SCALE: 1"=30' HORZ | 1"=3' VERT

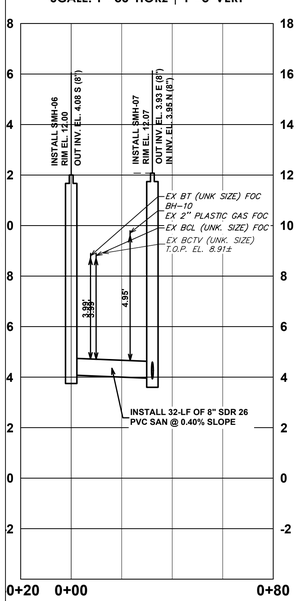

SMH-09 to SMH-08

SCALE: 1"=30' HORZ | 1"=3' VERT

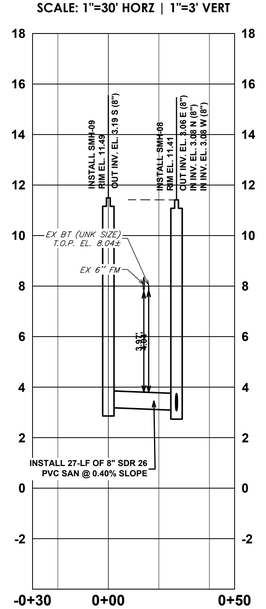

NW 18 ST

SCALE: 1"=30' HORZ | 1"=3' VERT

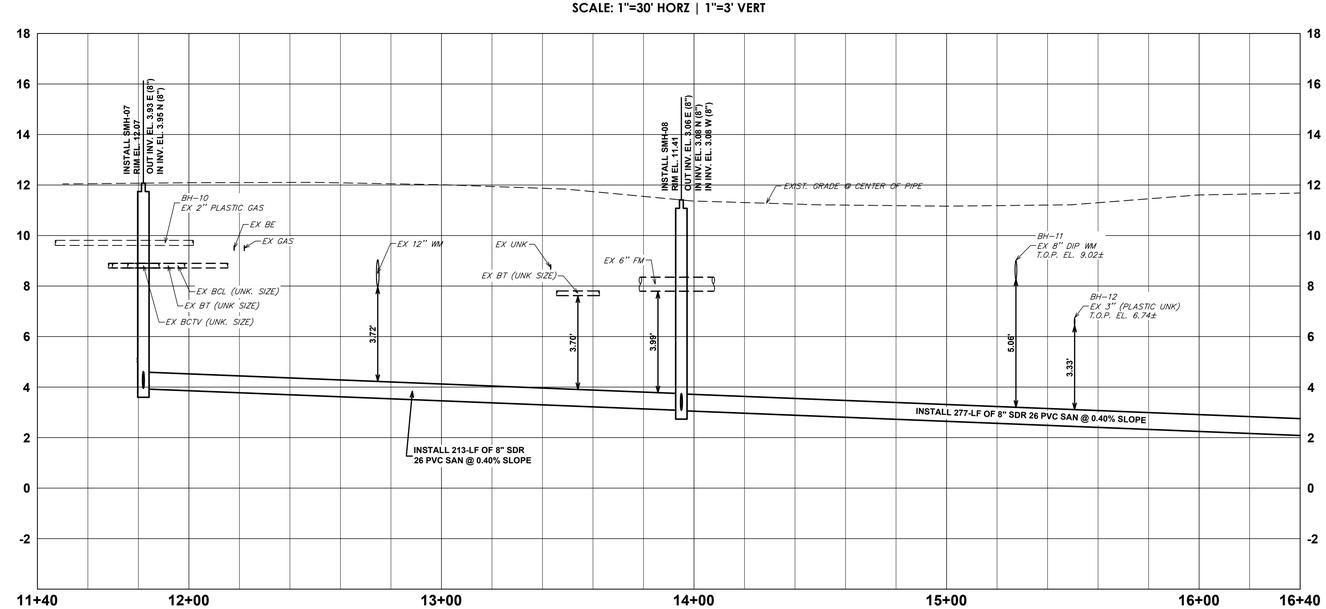

GENERAL NOTES:

1. PROPOSED IMPROVEMENTS ARE IN CLOSE PROXIMITY TO VARIOUS EXISTING UTILITIES. CONTRACTOR IS TO COORDINATE WITH UTILITY COMPANY TO RELOCATE THE UTILITY TO NOT CONFLICT WITH PROPOSED IMPROVEMENTS.
2. THE EXISTENCE AND LOCATION OF ANY UTILITIES SHOWN ON THESE PLANS MUST BE VERIFIED IN THE FIELD BY THE CONTRACTOR PRIOR TO CONSTRUCTION.
3. ALL EXISTING PAVEMENT MARKINGS & SIGNAGE DAMAGED DURING CONSTRUCTION MUST BE REPLACED/RESTORED TO MATCH EXISTING AND BE IN ACCORDANCE WITH MUTCD & APPLICABLE COUNTY, FDOT AND OR CITY TRAFFIC ENGINEERING DEPARTMENT MINIMUM STANDARDS.
4. DEFLECTION OF FRANCHISE UTILITIES TO BE PERFORMED BY SERVICE PROVIDER. CONTRACTOR TO CONTACT THE UTILITY SERVICE PROVIDER AND COORDINATE ANY UTILITY RELOCATIONS REQUIRED.
5. CONTRACTOR TO PROVIDE TEMPORARY SHORING/SHEET PILING TO PROTECT EXISTING INFRASTRUCTURE AS NECESSARY. COSTS ARE TO BE CONSIDERED INCIDENTAL TO THE INSTALLATION OF THE NEW SEWER SYSTEM.
6. ALL RESTORATION REQUIRED IS TO BE CONSIDERED INCIDENTAL TO THE PROPOSED SEWER SYSTEM PIPELINE COSTS AND ADDRESSED IN THE PIPELINE RELATED BID ITEMS.
7. ALL PROPOSED WORK REQUIRING RESTORATION WITHIN FDOT R/W (POWERLINE RD.) IS TO BE IN ACCORDANCE WITH FDOT SPECIFICATIONS AND STANDARDS, LATEST EDITIONS.
8. ANY EXISTING DRIVEWAYS (ASPHALT OR CONCRETE) DAMAGED AS A RESULT OF THE PROPOSED IMPROVEMENTS SHALL BE RESTORED TO MATCH EXISTING TYPE (ASPHALT OR CONCRETE) AND MATCH EXISTING THICKNESS. ASPHALT DRIVEWAYS TO BE A MINIMUM 1-1/2" SP 9.5 ASPHALT OVER MIN. 8" COMPACTED LIMEROCK AND COMPACTED SUBGRADE. CONCRETE DRIVEWAYS SHALL BE MIN. 6" THICK (3,000 PSI MIN./28 DAYS) UNREINFORCED OVER MIN. 4" COMPACTED SAND BASE. COMPACTION TO BE AT LEAST 98% OF THE MAXIMUM DENSITY PER AASHTO T-180 & LBR 40 MIN. SEE FDOT STANDARD INDEX 000-515. DRIVEWAY RESTORATION TO BE CONSIDERED INCIDENTAL TO THE PROPOSED SEWER SYSTEM PIPELINE COSTS IN THE BID.
9. CONTRACTOR TO AVOID IMPACTS TO EXIST. UTILITIES AND EXIST. TREES TO THE GREATEST EXTENT PRACTICAL. CONTRACTOR SHALL COORDINATE ALL REQUIRED FIELD ADJUSTMENTS WITH CITY AND ENGINEER.
10. ALL NEW TREES OR RELOCATED TREES ARE TO BE AT LEAST 5' MINIMUM HORIZONTAL SEPARATION FROM UTILITIES.
11. ALL TREES WITHIN WORK LIMITS SHALL BE PROTECTED PER CITY STANDARDS.

VERTICAL DATUM INFORMATION
ALL ELEVATIONS SHOWN ARE IN NORTH AMERICAN VERTICAL DATUM OF 1988 (NAVD88)

Sunshine 811
Call 811 or visit sunshine811.com two full business days before digging to have buried facilities located and marked.
Check positive response codes before you dig!

BID SET

cma
chen moore and associates
500 West Cypress Creek Road
Suite 600
Ft. Lauderdale, FL 33309
954.730.0707
www.chenmoore.com

REGISTRATION
DAVID EDGARDO CASTRO FELIU, PE
LICENSE NO. 85558
DATE: 01/22/25

DAVID EDGARDO CASTRO FELIU
LICENSE
No. 85558
STATE OF FLORIDA
PROFESSIONAL ENGINEER

THIS SEAL IS ONLY VALID ON PRINTED COPIES THAT ARE DATED WITH THE LICENSEE'S ORIGINAL HAND SIGNATURE. SCANNED OR ELECTRONIC COPIES ARE NOT CONSIDERED SIGNED AND SEALED.

CLIENT
pompano beach
Florida's Warmest Welcome
CITY OF POMPANO BEACH
100 WEST ATLANTIC BOULEVARD
POMPANO BEACH, FL 33060
Phone: 954.786.4600

PROJECT INFORMATION

NON SEWER AREA C SANITARY SEWER IMPROVEMENTS

POMPANO BEACH, FL

PROJECT NUMBER 23-0092.00085
CLIENT PROJECT NUMBER P331425
VERIFY SCALES 0 — 1"
IF NOT ONE INCH ON THIS SHEET, ADJUST SCALES ACCORDINGLY
REVISIONS

DATE OF ISSUE 01/22/25
DESIGNED BY DC
DRAWN BY JT
CHECKED BY DC
DRAWING TITLE

SANITARY PLAN AND PROFILE

DRAWING NUMBER
SS-3
10 OF 43

Plot Date: 1/22/2025 5:24:09 PM Username: dcastro Layout Name: SS-3
Folder Path: V:\Projects\2023\23-0092.00085 - area c sanitary sewer design services\Design\CAD\Sheets Filename: 23-0092.00085 Force Main.dwg

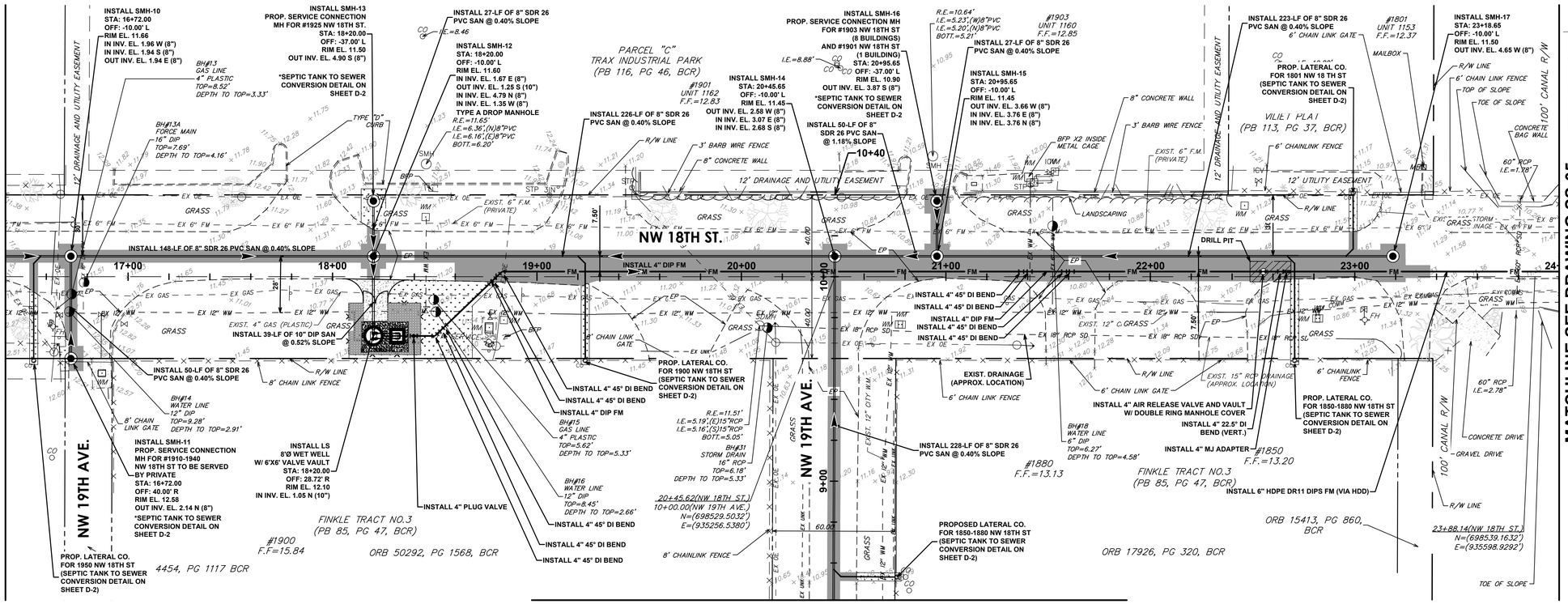

NW 18 ST

SCALE: 1"=30' HORZ | 1"=3' VERT

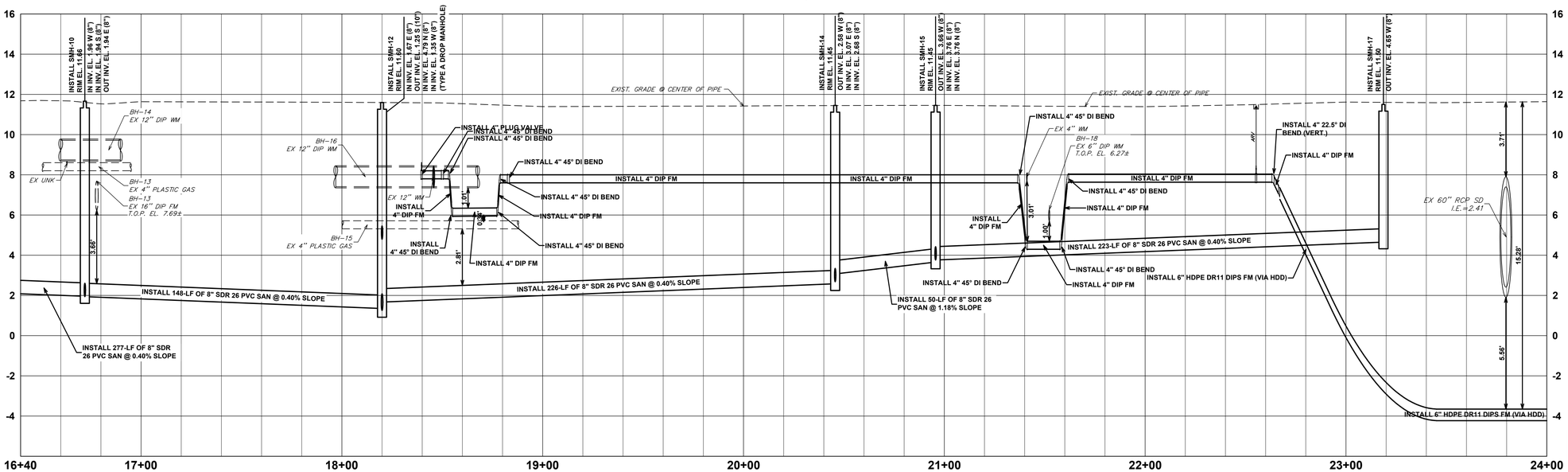

POWERLINE ROAD (FDOT) RESTORATION REQUIREMENTS:

CONSTRUCTION IN STATE ROADS (POWERLINE ROAD), WILL REQUIRE FULL LANE WIDTH RESTORATION (INCLUDING BIKE LANE) ALONG THE PROPOSED PARALLEL UTILITY INSTALLATION AND 50' PAVEMENT RESTORATION EITHER DIRECTION FROM TRENCH LIMITS FOR PERPENDICULAR INSTALLATIONS. PAVEMENT RESTORATION WILL BE IN ACCORDANCE WITH FDOT STANDARDS INDEX NO. 125-001. (FLEXIBLE PAVEMENT CUT).
(SEE SHEET R-1 FOR ADDITIONAL RESTORATION REQUIREMENT IN FDOT R/W).

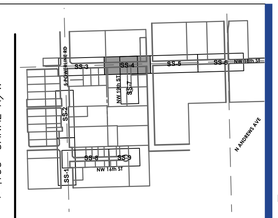

KEY MAP
N.T.S.

N

GRAPHIC SCALE
0 15 30 60
1 INCH = 30 FEET

GENERAL NOTES:

1. PROPOSED IMPROVEMENTS ARE IN CLOSE PROXIMITY TO VARIOUS EXISTING UTILITIES. CONTRACTOR IS TO COORDINATE WITH UTILITY COMPANY TO RELOCATE THE UTILITY TO NOT CONFLICT WITH PROPOSED IMPROVEMENTS.
2. THE EXISTENCE AND LOCATION OF ANY UTILITIES SHOWN ON THESE PLANS MUST BE VERIFIED IN THE FIELD BY THE CONTRACTOR PRIOR TO CONSTRUCTION.
3. ALL EXISTING PAVEMENT MARKINGS & SIGNAGE DAMAGED DURING CONSTRUCTION MUST BE REPLACED/RESTORED TO MATCH EXISTING AND BE IN ACCORDANCE WITH MUTCD & APPLICABLE COUNTY, FDOT AND OR CITY TRAFFIC ENGINEERING DEPARTMENT MINIMUM STANDARDS.
4. DEFLECTION OF FRANCHISE UTILITIES TO BE PERFORMED BY SERVICE PROVIDER. CONTRACTOR TO CONTACT THE UTILITY SERVICE PROVIDER AND COORDINATE ANY UTILITY RELOCATIONS REQUIRED.
5. CONTRACTOR TO PROVIDE TEMPORARY SHORING/SHEET PILING TO PROTECT EXISTING INFRASTRUCTURE AS NECESSARY. COSTS ARE TO BE CONSIDERED INCIDENTAL TO THE INSTALLATION OF THE NEW SEWER SYSTEM.
6. ALL RESTORATION REQUIRED IS TO BE CONSIDERED INCIDENTAL TO THE PROPOSED SEWER SYSTEM PIPELINE COSTS AND ADDRESSED IN THE PIPELINE RELATED BID ITEMS.
7. ALL PROPOSED WORK REQUIRING RESTORATION WITHIN FDOT R/W (POWERLINE RD.) IS TO BE IN ACCORDANCE WITH FDOT SPECIFICATIONS AND STANDARDS, LATEST EDITIONS.
8. ANY EXISTING DRIVEWAYS (ASPHALT OR CONCRETE) DAMAGED AS A RESULT OF THE PROPOSED IMPROVEMENTS SHALL BE RESTORED TO MATCH EXISTING TYPE (ASPHALT OR CONCRETE) AND MATCH EXISTING THICKNESS. ASPHALT DRIVEWAYS TO BE A MINIMUM 1-1/2" SP 9.5 ASPHALT OVER MIN. 8" COMPACTED LIMEROCK AND COMPACTED SUBGRADE. CONCRETE DRIVEWAYS SHALL BE MIN. 6" THICK (3,000 PSI MIN./28 DAYS) UNREINFORCED OVER MIN. 4" COMPACTED SAND BASE. COMPACTION TO BE AT LEAST 98% OF THE MAXIMUM DENSITY PER AASHTO T-180 & LBR 40 MIN. SEE FDOT STANDARD INDEX 000-515. DRIVEWAY RESTORATION TO BE CONSIDERED INCIDENTAL TO THE PROPOSED SEWER SYSTEM PIPELINE COSTS IN THE BID.
9. CONTRACTOR TO AVOID IMPACTS TO EXIST. UTILITIES AND EXIST. TREES TO THE GREATEST EXTENT PRACTICAL. CONTRACTOR SHALL COORDINATE ALL REQUIRED FIELD ADJUSTMENTS WITH CITY AND ENGINEER.
10. ALL NEW TREES OR RELOCATED TREES ARE TO BE AT LEAST 5' MINIMUM HORIZONTAL SEPARATION FROM UTILITIES.
11. ALL TREES WITHIN WORK LIMITS SHALL BE PROTECTED PER CITY STANDARDS.

VERTICAL DATUM INFORMATION
ALL ELEVATIONS SHOWN ARE IN NORTH AMERICAN VERTICAL DATUM OF 1988 (NAVD88)

Sunshine 811
Call 811 or visit sunshine811.com two full business days before digging to have buried facilities located and marked.
Check positive response codes before you dig!

BID SET

cma
chen moore and associates
500 West Cypress Creek Road
Suite 600
Ft. Lauderdale, FL 33309
954.730.0707
www.chenmoore.com

REGISTRATION
DAVID EDGARDO CASTRO FELIU, PE
LICENSE NO. 85558
DATE: 01/22/25

DAVID EDGARDO CASTRO FELIU
LICENSE
No. 85558
STATE OF FLORIDA
PROFESSIONAL ENGINEER

THIS SEAL IS ONLY VALID ON PRINTED COPIES THAT ARE DATED WITH THE LICENSEE'S ORIGINAL HAND SIGNATURE. SCANNED OR ELECTRONIC COPIES ARE NOT CONSIDERED SIGNED AND SEALED.

CLIENT
pompano beach
Florida's Warmest Welcome
CITY OF POMPANO BEACH
100 WEST ATLANTIC BOULEVARD
POMPANO BEACH, FL 33060
Phone: 954.786.4600

PROJECT INFORMATION

NON SEWER AREA C SANITARY SEWER IMPROVEMENTS

POMPANO BEACH, FL

PROJECT NUMBER
23-0092.00085

CLIENT PROJECT NUMBER
P331425

VERIFY SCALES
0 1"
IF NOT ONE INCH ON THIS SHEET, ADJUST SCALES ACCORDINGLY

REVISIONS

DATE OF ISSUE
01/22/25

DESIGNED BY
DC

DRAWN BY
JT

CHECKED BY
DC

DRAWING TITLE

SANITARY PLAN AND PROFILE

DRAWING NUMBER
SS-4

Plot Date: 1/22/2025 5:21:07 PM Username: dcastro Layout Name: SS-4
Folder Path: V:\Projects\2023\23-0092.00085 - area c sanitary sewer design services\Design\CAD\Sheets Filename: 23-0092.00085 Force Main.dwg

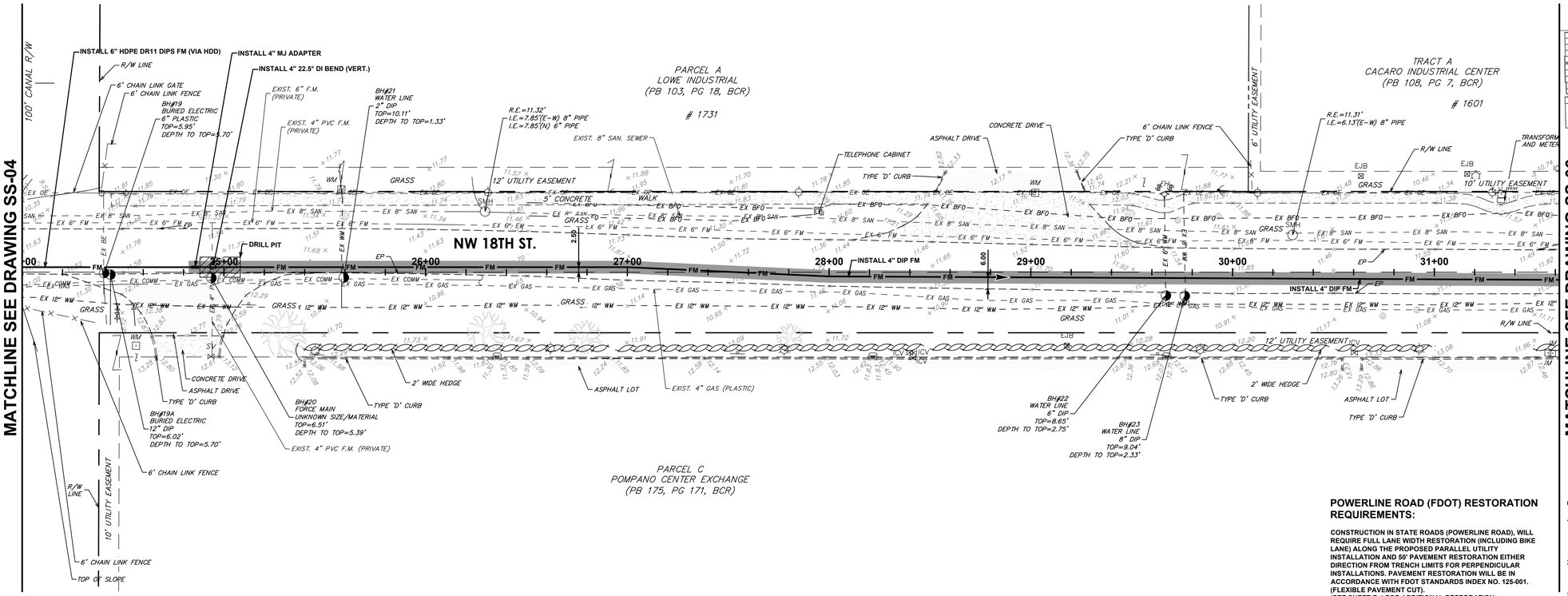

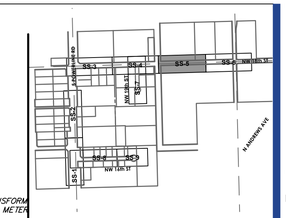

KEY MAP
N.T.S.

N

GRAPHIC SCALE
0 15 30 60
1 INCH = 30 FEET

NW 18 ST

SCALE: 1"=30' HORZ | 1"=3' VERT

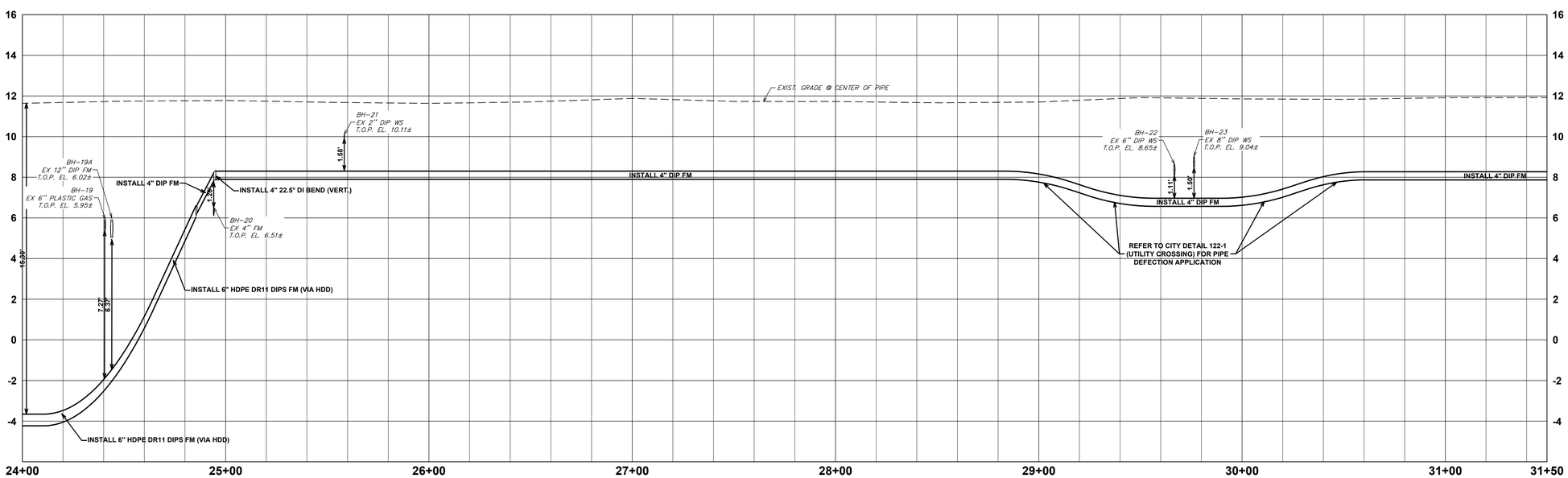

POWERLINE ROAD (FDOT) RESTORATION REQUIREMENTS:

CONSTRUCTION IN STATE ROADS (POWERLINE ROAD), WILL REQUIRE FULL LANE WIDTH RESTORATION (INCLUDING BIKE LANE) ALONG THE PROPOSED PARALLEL UTILITY INSTALLATION AND 50' PAVEMENT RESTORATION EITHER DIRECTION FROM TRENCH LIMITS FOR PERPENDICULAR INSTALLATIONS. PAVEMENT RESTORATION WILL BE IN ACCORDANCE WITH FDOT STANDARDS INDEX NO. 125-001. (FLEXIBLE PAVEMENT CUT).
(SEE SHEET R-1 FOR ADDITIONAL RESTORATION REQUIREMENT IN FDOT R/W).

GENERAL NOTES:

1. PROPOSED IMPROVEMENTS ARE IN CLOSE PROXIMITY TO VARIOUS EXISTING UTILITIES. CONTRACTOR IS TO COORDINATE WITH UTILITY COMPANY TO RELOCATE THE UTILITY TO NOT CONFLICT WITH PROPOSED IMPROVEMENTS.
2. THE EXISTENCE AND LOCATION OF ANY UTILITIES SHOWN ON THESE PLANS MUST BE VERIFIED IN THE FIELD BY THE CONTRACTOR PRIOR TO CONSTRUCTION.
3. ALL EXISTING PAVEMENT MARKINGS & SIGNAGE DAMAGED DURING CONSTRUCTION MUST BE REPLACED/RESTORED TO MATCH EXISTING AND BE IN ACCORDANCE WITH MUTCD & APPLICABLE COUNTY, FDOT AND OR CITY TRAFFIC ENGINEERING DEPARTMENT MINIMUM STANDARDS.
4. DEFLECTION OF FRANCHISE UTILITIES TO BE PERFORMED BY SERVICE PROVIDER. CONTRACTOR TO CONTACT THE UTILITY SERVICE PROVIDER AND COORDINATE ANY UTILITY RELOCATIONS REQUIRED.
5. CONTRACTOR TO PROVIDE TEMPORARY SHORING/SHEET PILING TO PROTECT EXISTING INFRASTRUCTURE AS NECESSARY. COSTS ARE TO BE CONSIDERED INCIDENTAL TO THE INSTALLATION OF THE NEW SEWER SYSTEM.
6. ALL RESTORATION REQUIRED IS TO BE CONSIDERED INCIDENTAL TO THE PROPOSED SEWER SYSTEM PIPELINE COSTS AND ADDRESSED IN THE PIPELINE RELATED BID ITEMS.
7. ALL PROPOSED WORK REQUIRING RESTORATION WITHIN FDOT R/W (POWERLINE RD.) IS TO BE IN ACCORDANCE WITH FDOT SPECIFICATIONS AND STANDARDS, LATEST EDITIONS.
8. ANY EXISTING DRIVEWAYS (ASPHALT OR CONCRETE) DAMAGED AS A RESULT OF THE PROPOSED IMPROVEMENTS SHALL BE RESTORED TO MATCH EXISTING TYPE (ASPHALT OR CONCRETE) AND MATCH EXISTING THICKNESS. ASPHALT DRIVEWAYS TO BE A MINIMUM 1-1/2" SP 9.5 ASPHALT OVER MIN. 8" COMPACTED LIMEROCK AND COMPACTED SUBGRADE. CONCRETE DRIVEWAYS SHALL BE MIN. 6" THICK (3,000 PSI MIN./28 DAYS) UNREINFORCED OVER MIN. 4" COMPACTED SAND BASE. COMPACTION TO BE AT LEAST 98% OF THE MAXIMUM DENSITY PER AASHTO T-180 & LBR 40 MIN. SEE FDOT STANDARD INDEX 000-515. DRIVEWAY RESTORATION TO BE CONSIDERED INCIDENTAL TO THE PROPOSED SEWER SYSTEM PIPELINE COSTS IN THE BID.
9. CONTRACTOR TO AVOID IMPACTS TO EXIST. UTILITIES AND EXIST. TREES TO THE GREATEST EXTENT PRACTICAL. CONTRACTOR SHALL COORDINATE ALL REQUIRED FIELD ADJUSTMENTS WITH CITY AND ENGINEER.
10. ALL NEW TREES OR RELOCATED TREES ARE TO BE AT LEAST 5' MINIMUM HORIZONTAL SEPARATION FROM UTILITIES.
11. ALL TREES WITHIN WORK LIMITS SHALL BE PROTECTED PER CITY STANDARDS.

VERTICAL DATUM INFORMATION
ALL ELEVATIONS SHOWN ARE IN NORTH AMERICAN VERTICAL DATUM OF 1988 (NAVD88)

Sunshine 811
Call 811 or visit sunshine811.com two full business days before digging to have buried facilities located and marked.
Check positive response codes before you dig!

BID SET

cma
chen moore and associates
500 West Cypress Creek Road
Suite 600
Ft. Lauderdale, FL 33309
954.730.0707
www.chenmoore.com

REGISTRATION
DAVID EDGARDO CASTRO FELIU, PE
LICENSE NO. 85558
DATE: 01/22/25

DAVID EDGARDO CASTRO FELIU
LICENSE
No. 85558
STATE OF FLORIDA
PROFESSIONAL ENGINEER

THIS SEAL IS ONLY VALID ON PRINTED COPIES THAT ARE DATED WITH THE LICENSEE'S ORIGINAL HAND SIGNATURE. SCANNED OR ELECTRONIC COPIES ARE NOT CONSIDERED SIGNED AND SEALED.

CLIENT
pompano beach
Florida's Warmest Welcome
CITY OF POMPANO BEACH
100 WEST ATLANTIC BOULEVARD
POMPANO BEACH, FL 33060
Phone: 954.786.4600

PROJECT INFORMATION

NON SEWER AREA C SANITARY SEWER IMPROVEMENTS

POMPANO BEACH, FL

PROJECT NUMBER
23-0092.00085

CLIENT PROJECT NUMBER
P331425

VERIFY SCALES
0 — 1"
IF NOT ONE INCH ON THIS SHEET, ADJUST SCALES ACCORDINGLY

REVISIONS

DATE OF ISSUE
01/22/25

DESIGNED BY
DC

DRAWN BY
JT

CHECKED BY
DC

DRAWING TITLE
SANITARY PLAN AND PROFILE

DRAWING NUMBER
SS-5

Plot Date: 1/22/2025 5:21:20 PM Username: dcastro Layout Name: SS-5
Folder Path: V:\Projects\2023\23-0092.00085 - area c sanitary sewer design services\Design\CAD\Sheets Filename: 23-0092.00085 Force Main.dwg

MATCHLINE SEE DRAWING SS-05

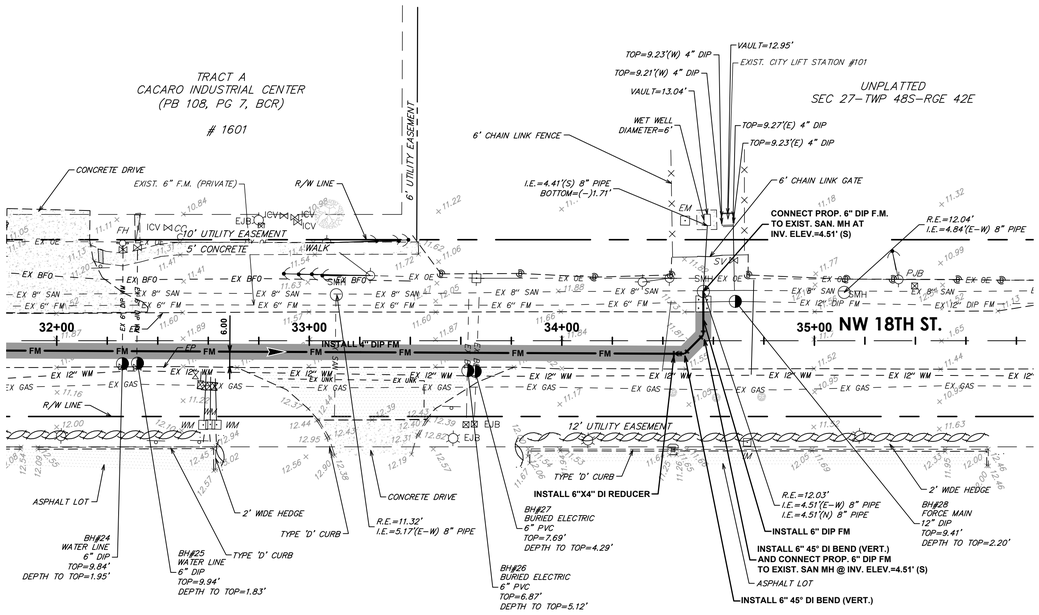

SMH-10 to SMH-11

SCALE: 1"=30' HORZ | 1"=3' VERT

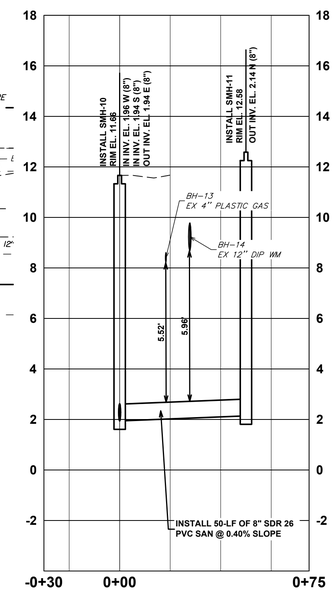

SMH-13 to SMH-12

SCALE: 1"=30' HORZ | 1"=3' VERT

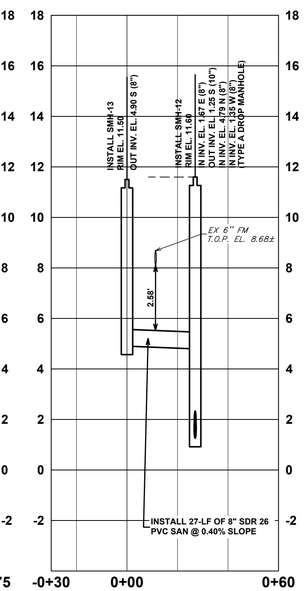

SMH-12 to WETWELL

SCALE: 1"=30' HORZ | 1"=3' VERT

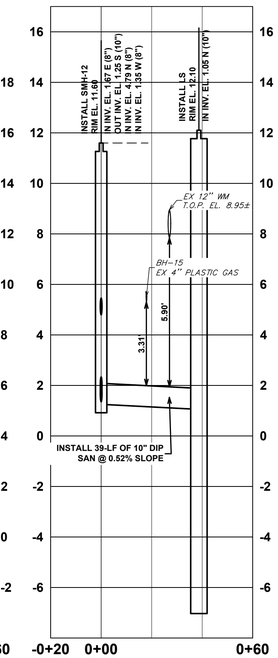

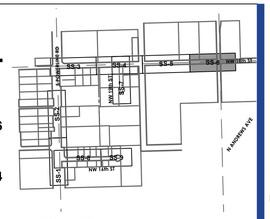

KEY MAP

N.T.S.

N

GRAPHIC SCALE

0 15 30 60

1 INCH = 30 FEET

NW 18 ST

SCALE: 1"=30' HORZ | 1"=3' VERT

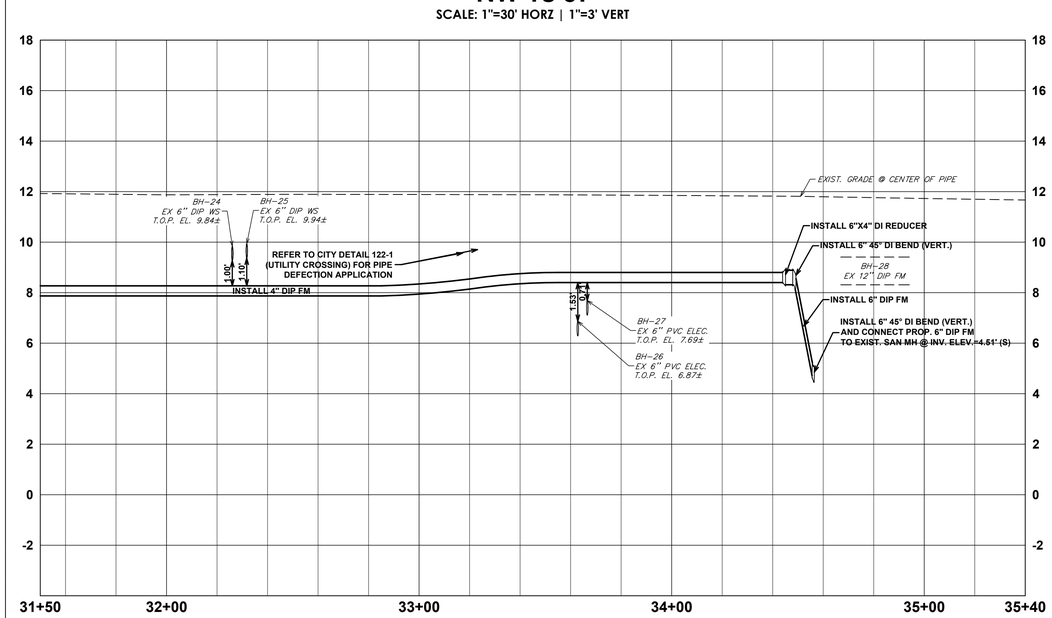

SMH-16 to SMH-15

SCALE: 1"=30' HORZ | 1"=3' VERT

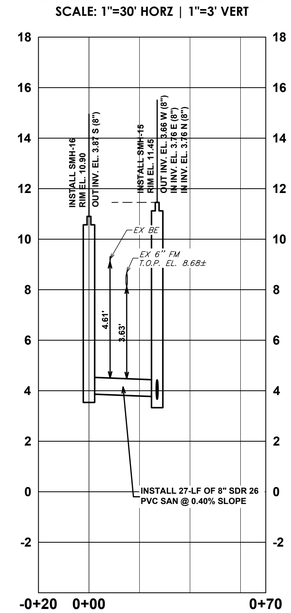

POWERLINE ROAD (FDOT) RESTORATION REQUIREMENTS:

CONSTRUCTION IN STATE ROADS (POWERLINE ROAD), WILL REQUIRE FULL LANE WIDTH RESTORATION (INCLUDING BIKE LANE) ALONG THE PROPOSED PARALLEL UTILITY INSTALLATION AND 50' PAVEMENT RESTORATION EITHER DIRECTION FROM TRENCH LIMITS FOR PERPENDICULAR INSTALLATIONS. PAVEMENT RESTORATION WILL BE IN ACCORDANCE WITH FDOT STANDARDS INDEX NO. 125-001. (FLEXIBLE PAVEMENT CUT).
(SEE SHEET R-1 FOR ADDITIONAL RESTORATION REQUIREMENT IN FDOT R/W).

GENERAL NOTES:

1. PROPOSED IMPROVEMENTS ARE IN CLOSE PROXIMITY TO VARIOUS EXISTING UTILITIES. CONTRACTOR IS TO COORDINATE WITH UTILITY COMPANY TO RELOCATE THE UTILITY TO NOT CONFLICT WITH PROPOSED IMPROVEMENTS.
2. THE EXISTENCE AND LOCATION OF ANY UTILITIES SHOWN ON THESE PLANS MUST BE VERIFIED IN THE FIELD BY THE CONTRACTOR PRIOR TO CONSTRUCTION.
3. ALL EXISTING PAVEMENT MARKINGS & SIGNAGE DAMAGED DURING CONSTRUCTION MUST BE REPLACED/RESTORED TO MATCH EXISTING AND BE IN ACCORDANCE WITH MUTCD & APPLICABLE COUNTY, FDOT AND OR CITY TRAFFIC ENGINEERING DEPARTMENT MINIMUM STANDARDS.
4. DEFLECTION OF FRANCHISE UTILITIES TO BE PERFORMED BY SERVICE PROVIDER. CONTRACTOR TO CONTACT THE UTILITY SERVICE PROVIDER AND COORDINATE ANY UTILITY RELOCATIONS REQUIRED.
5. CONTRACTOR TO PROVIDE TEMPORARY SHORING/SHEET PILING TO PROTECT EXISTING INFRASTRUCTURE AS NECESSARY. COSTS ARE TO BE CONSIDERED INCIDENTAL TO THE INSTALLATION OF THE NEW SEWER SYSTEM.
6. ALL RESTORATION REQUIRED IS TO BE CONSIDERED INCIDENTAL TO THE PROPOSED SEWER SYSTEM PIPELINE COSTS AND ADDRESSED IN THE PIPELINE RELATED BID ITEMS.
7. ALL PROPOSED WORK REQUIRING RESTORATION WITHIN FDOT R/W (POWERLINE RD.) IS TO BE IN ACCORDANCE WITH FDOT SPECIFICATIONS AND STANDARDS, LATEST EDITIONS.
8. ANY EXISTING DRIVEWAYS (ASPHALT OR CONCRETE) DAMAGED AS A RESULT OF THE PROPOSED IMPROVEMENTS SHALL BE RESTORED TO MATCH EXISTING TYPE (ASPHALT OR CONCRETE) AND MATCH EXISTING THICKNESS. ASPHALT DRIVEWAYS TO BE A MINIMUM 1-1/2" SP 9.5 ASPHALT OVER MIN. 8" COMPACTED LIMEROCK AND COMPACTED SUBGRADE. CONCRETE DRIVEWAYS SHALL BE MIN. 6" THICK (3,000 PSI MIN./28 DAYS) UNREINFORCED OVER MIN. 4" COMPACTED SAND BASE. COMPACTION TO BE AT LEAST 98% OF THE MAXIMUM DENSITY PER AASHTO T-180 & LBR 40 MIN. SEE FDOT STANDARD INDEX 000-515. DRIVEWAY RESTORATION TO BE CONSIDERED INCIDENTAL TO THE PROPOSED SEWER SYSTEM PIPELINE COSTS IN THE BID.
9. CONTRACTOR TO AVOID IMPACTS TO EXIST. UTILITIES AND EXIST. TREES TO THE GREATEST EXTENT PRACTICAL. CONTRACTOR SHALL COORDINATE ALL REQUIRED FIELD ADJUSTMENTS WITH CITY AND ENGINEER.
10. ALL NEW TREES OR RELOCATED TREES ARE TO BE AT LEAST 5' MINIMUM HORIZONTAL SEPARATION FROM UTILITIES.
11. ALL TREES WITHIN WORK LIMITS SHALL BE PROTECTED PER CITY STANDARDS.

VERTICAL DATUM INFORMATION
ALL ELEVATIONS SHOWN ARE IN NORTH AMERICAN VERTICAL DATUM OF 1988 (NAVD88)

Sunshine 811
Call 811 or visit sunshine811.com two full business days before digging to have buried facilities located and marked.
Check positive response codes before you dig!

BID SET

cma
chen moore and associates
500 West Cypress Creek Road
Suite 600
Ft. Lauderdale, FL 33309
954.730.0707
www.chenmoore.com

REGISTRATION
DAVID EDGARDO CASTRO FELIU, PE
LICENSE NO. 85558
DATE: 01/22/25
DAVID EDGARDO CASTRO FELIU LICENSE No. 85558 STATE OF FLORIDA PROFESSIONAL ENGINEER

THIS SEAL IS ONLY VALID ON PRINTED COPIES THAT ARE DATED WITH THE LICENSEE'S ORIGINAL HAND SIGNATURE. SCANNED OR ELECTRONIC COPIES ARE NOT CONSIDERED SIGNED AND SEALED.

CLIENT
pompano beach
Florida's Warmest Welcome
CITY OF POMPANO BEACH
100 WEST ATLANTIC BOULEVARD
POMPANO BEACH, FL 33060
Phone: 954.786.4600

PROJECT INFORMATION

NON SEWER AREA C SANITARY SEWER IMPROVEMENTS

POMPANO BEACH, FL

PROJECT NUMBER
23-0092.00085

CLIENT PROJECT NUMBER
P331425

VERIFY SCALES
0 1"
IF NOT ONE INCH ON THIS SHEET, ADJUST SCALES ACCORDINGLY

REVISIONS

DATE OF ISSUE
01/22/25

DESIGNED BY
DC

DRAWN BY
JT

CHECKED BY
DC

DRAWING TITLE
SANITARY PLAN AND PROFILE

DRAWING NUMBER
SS-6
13 OF 43

Plot Date: 1/22/2025 5:21:35 PM Username: dcastro Layout Name: SS-6
Folder Path: V:\Projects\2023\23-0092.00085 - area c sanitary sewer design services\Design\CAD\Sheets Filename: 23-0092.00085 Force Main.dwg

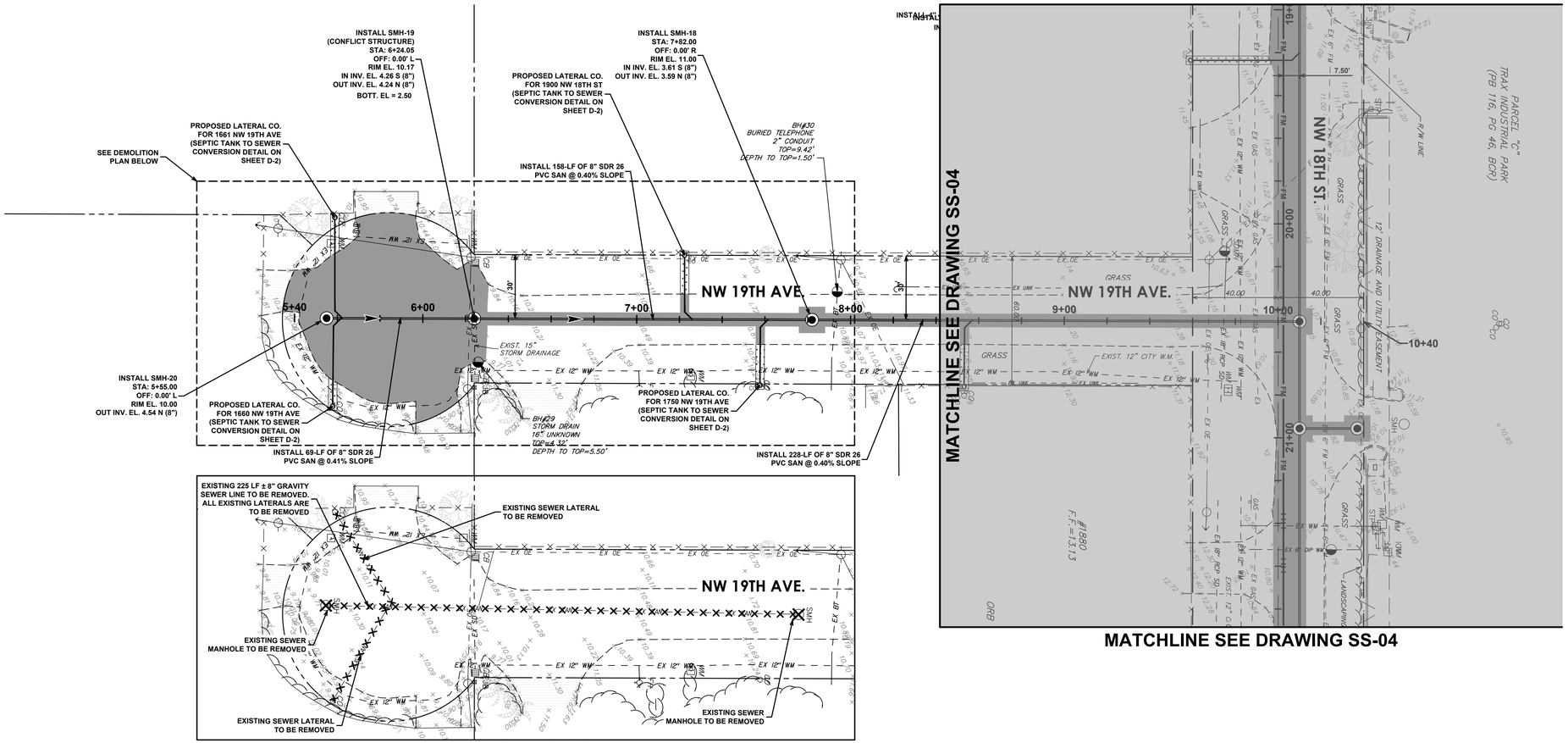

DEMOLITION PLAN

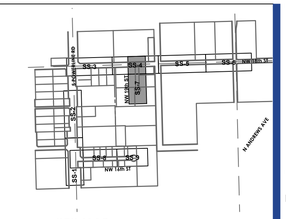

MATCHLINE SEE DRAWING SS-01

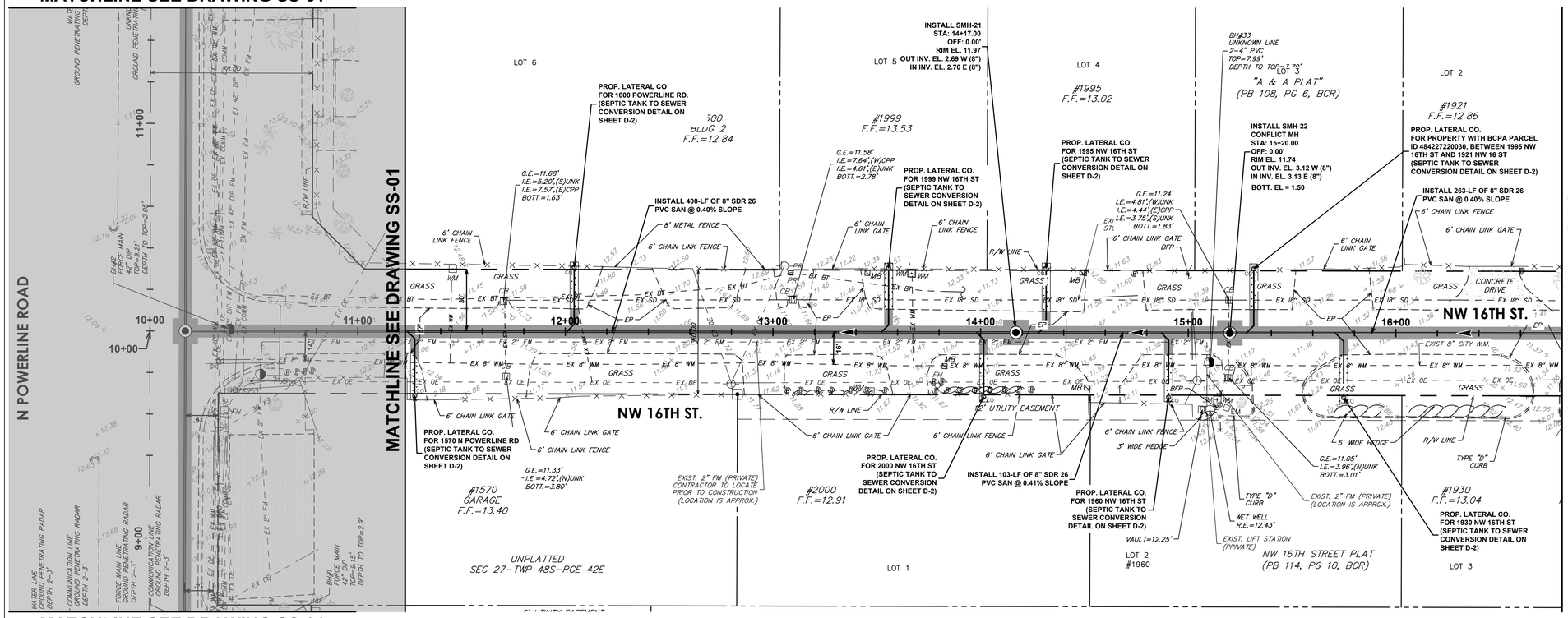

MATCHLINE SEE DRAWING SS-01

NW 16 ST

SCALE: 1"=30' HORZ | 1"=3' VERT

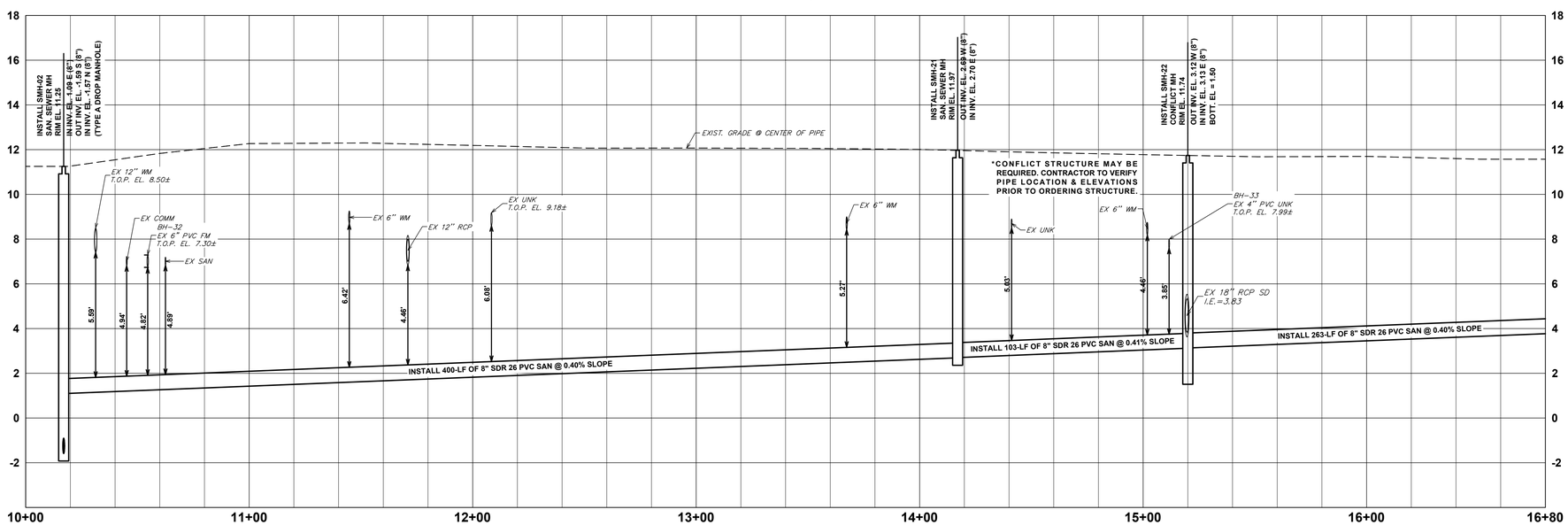

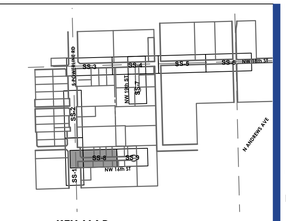

KEY MAP

N.T.S.

N

GRAPHIC SCALE

0 15 30 60

1 INCH = 30 FEET

POWERLINE ROAD (FDOT) RESTORATION REQUIREMENTS:

CONSTRUCTION IN STATE ROADS (POWERLINE ROAD), WILL REQUIRE FULL LANE WIDTH RESTORATION (INCLUDING BIKE LANE) ALONG THE PROPOSED PARALLEL UTILITY INSTALLATION AND 50' PAVEMENT RESTORATION EITHER DIRECTION FROM TRENCH LIMITS FOR PERPENDICULAR INSTALLATIONS. PAVEMENT RESTORATION WILL BE IN ACCORDANCE WITH FDOT STANDARDS INDEX NO. 125-001. (FLEXIBLE PAVEMENT CUT).
(SEE SHEET R-1 FOR ADDITIONAL RESTORATION REQUIREMENT IN FDOT R/W).

GENERAL NOTES:

1. PROPOSED IMPROVEMENTS ARE IN CLOSE PROXIMITY TO VARIOUS EXISTING UTILITIES. CONTRACTOR IS TO COORDINATE WITH UTILITY COMPANY TO RELOCATE THE UTILITY TO NOT CONFLICT WITH PROPOSED IMPROVEMENTS.
2. THE EXISTENCE AND LOCATION OF ANY UTILITIES SHOWN ON THESE PLANS MUST BE VERIFIED IN THE FIELD BY THE CONTRACTOR PRIOR TO CONSTRUCTION.
3. ALL EXISTING PAVEMENT MARKINGS & SIGNAGE DAMAGED DURING CONSTRUCTION MUST BE REPLACED/RESTORED TO MATCH EXISTING AND BE IN ACCORDANCE WITH MUTCD & APPLICABLE COUNTY, FDOT AND OR CITY TRAFFIC ENGINEERING DEPARTMENT MINIMUM STANDARDS.
4. DEFLECTION OF FRANCHISE UTILITIES TO BE PERFORMED BY SERVICE PROVIDER. CONTRACTOR TO CONTACT THE UTILITY SERVICE PROVIDER AND COORDINATE ANY UTILITY RELOCATIONS REQUIRED.
5. CONTRACTOR TO PROVIDE TEMPORARY SHORING/SHEET PILING TO PROTECT EXISTING INFRASTRUCTURE AS NECESSARY. COSTS ARE TO BE CONSIDERED INCIDENTAL TO THE INSTALLATION OF THE NEW SEWER SYSTEM.
6. ALL RESTORATION REQUIRED IS TO BE CONSIDERED INCIDENTAL TO THE PROPOSED SEWER SYSTEM PIPELINE COSTS AND ADDRESSED IN THE PIPELINE RELATED BID ITEMS.
7. ALL PROPOSED WORK REQUIRING RESTORATION WITHIN FDOT R/W (POWERLINE RD.) IS TO BE IN ACCORDANCE WITH FDOT SPECIFICATIONS AND STANDARDS, LATEST EDITIONS.
8. ANY EXISTING DRIVEWAYS (ASPHALT OR CONCRETE) DAMAGED AS A RESULT OF THE PROPOSED IMPROVEMENTS SHALL BE RESTORED TO MATCH EXISTING TYPE (ASPHALT OR CONCRETE) AND MATCH EXISTING THICKNESS. ASPHALT DRIVEWAYS TO BE A MINIMUM 1-1/2" SP 9.5 ASPHALT OVER MIN. 8" COMPACTED LIMEROCK AND COMPACTED SUBGRADE. CONCRETE DRIVEWAYS SHALL BE MIN. 6" THICK (3,000 PSI MIN./28 DAYS) UNREINFORCED OVER MIN. 4" COMPACTED SAND BASE. COMPACTION TO BE AT LEAST 98% OF THE MAXIMUM DENSITY PER AASHTO T-180 & LBR 40 MIN. SEE FDOT STANDARD INDEX 000-515. DRIVEWAY RESTORATION TO BE CONSIDERED INCIDENTAL TO THE PROPOSED SEWER SYSTEM PIPELINE COSTS IN THE BID.
9. CONTRACTOR TO AVOID IMPACTS TO EXIST. UTILITIES AND EXIST. TREES TO THE GREATEST EXTENT PRACTICAL. CONTRACTOR SHALL COORDINATE ALL REQUIRED FIELD ADJUSTMENTS WITH CITY AND ENGINEER.
10. ALL NEW TREES OR RELOCATED TREES ARE TO BE AT LEAST 5' MINIMUM HORIZONTAL SEPARATION FROM UTILITIES.
11. ALL TREES WITHIN WORK LIMITS SHALL BE PROTECTED PER CITY STANDARDS.

VERTICAL DATUM INFORMATION
ALL ELEVATIONS SHOWN ARE IN NORTH AMERICAN VERTICAL DATUM OF 1988 (NAVD88)

Sunshine811
Call 811 or visit sunshine811.com two full business days before digging to have buried facilities located and marked.
Check positive response codes before you dig!

BID SET

cma
chen moore and associates
500 West Cypress Creek Road
Suite 600
Ft. Lauderdale, FL 33309
954.730.0707
www.chenmoore.com

REGISTRATION
DAVID EDGARDO CASTRO FELIU, PE
LICENSE NO. 85558
DATE: 01/22/25
DAVID EDGARDO CASTRO FELIU LICENSE No. 85558 STATE OF FLORIDA PROFESSIONAL ENGINEER

THIS SEAL IS ONLY VALID ON PRINTED COPIES THAT ARE DATED WITH THE LICENSEE'S ORIGINAL HAND SIGNATURE. SCANNED OR ELECTRONIC COPIES ARE NOT CONSIDERED SIGNED AND SEALED.

CLIENT
pompano beach
Florida's Warmest Welcome
CITY OF POMPANO BEACH
100 WEST ATLANTIC BOULEVARD
POMPANO BEACH, FL 33060
Phone: 954.786.4600

PROJECT INFORMATION

NON SEWER AREA C SANITARY SEWER IMPROVEMENTS

POMPANO BEACH, FL

PROJECT NUMBER
23-0092.00085

CLIENT PROJECT NUMBER
P331425

VERIFY SCALES
0 1"
IF NOT ONE INCH ON THIS SHEET, ADJUST SCALES ACCORDINGLY

REVISIONS

DATE OF ISSUE
01/22/25

DESIGNED BY
DC

DRAWN BY
JT

CHECKED BY
DC

DRAWING TITLE

SANITARY PLAN AND PROFILE

DRAWING NUMBER
SS-8

Plot Date: 1/22/2025 5:22:20 PM Username: dcastro Layout Name: SS-8
Folder Path: V:\Projects\2023\23-0092.00085 - area c sanitary sewer design services\Design\CAD\Sheets Filename: 23-0092.00085 Force Main.dwg

MATCHLINE SEE DRAWING SS-08

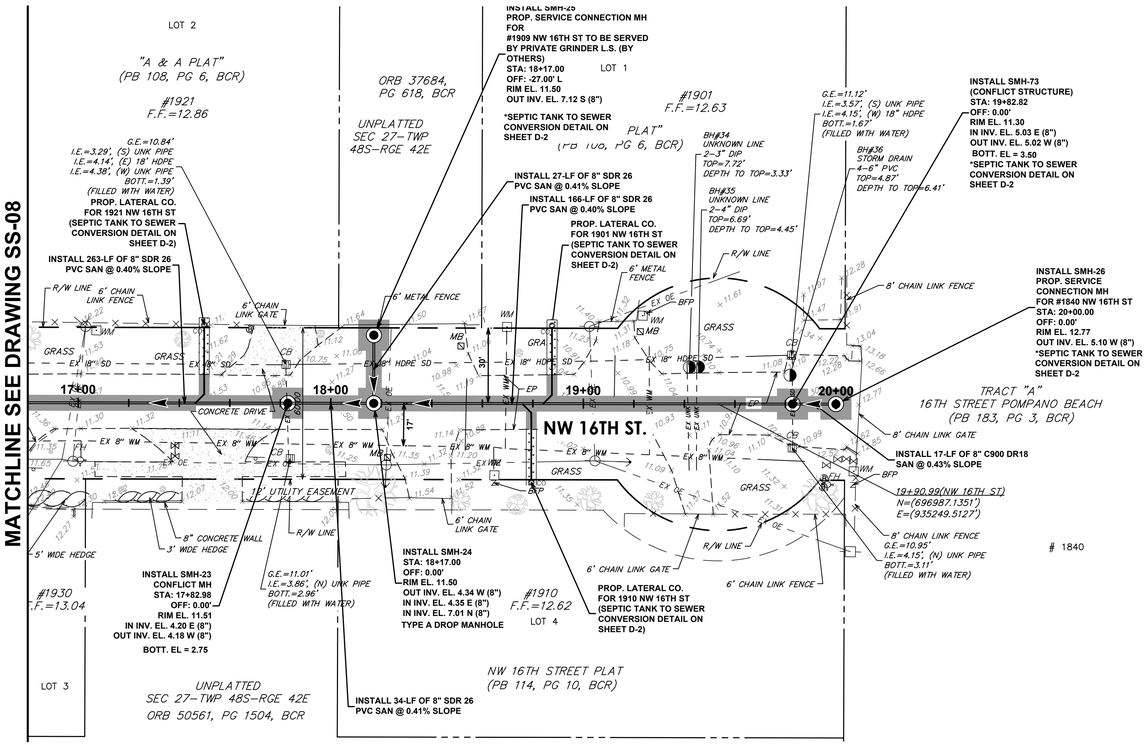

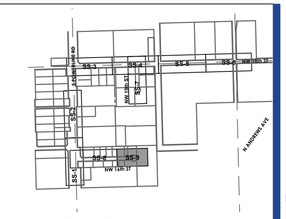

KEY MAP
N.T.S.

N

GRAPHIC SCALE
0 15 30 60
1 INCH = 30 FEET

NW 16 ST

SCALE: 1"=30' HORZ | 1"=3' VERT

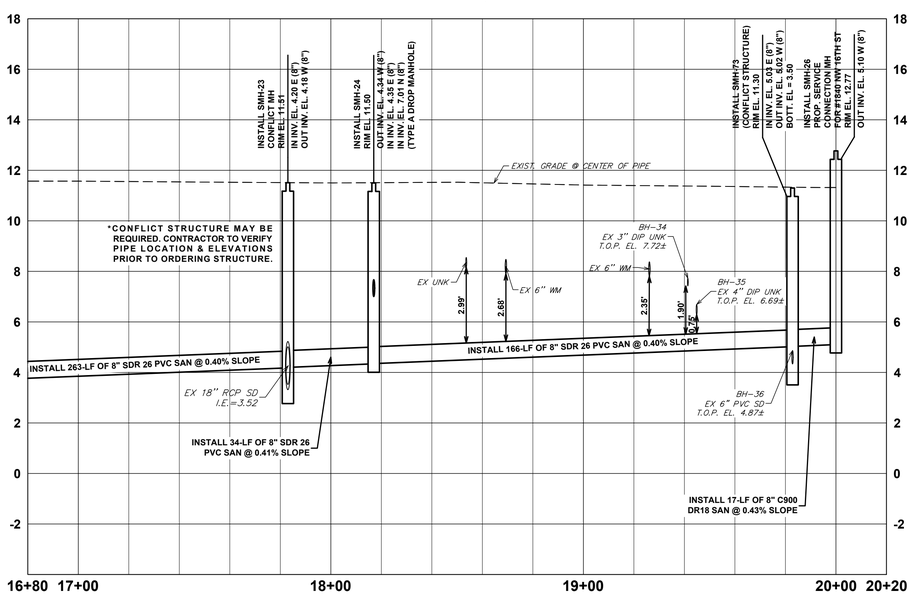

SMH-25 to SMH-24

SCALE: 1"=30' HORZ | 1"=3' VERT

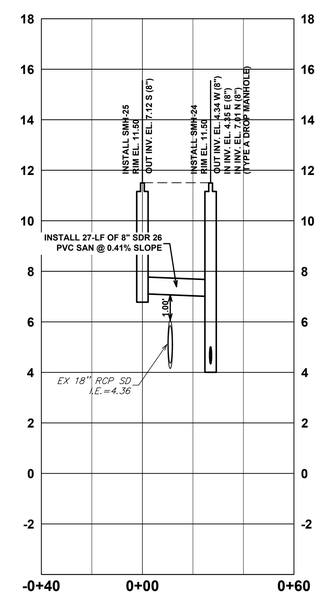

POWERLINE ROAD (FDOT) RESTORATION REQUIREMENTS:

CONSTRUCTION IN STATE ROADS (POWERLINE ROAD), WILL REQUIRE FULL LANE WIDTH RESTORATION (INCLUDING BIKE LANE) ALONG THE PROPOSED PARALLEL UTILITY INSTALLATION AND 50' PAVEMENT RESTORATION EITHER DIRECTION FROM TRENCH LIMITS FOR PERPENDICULAR INSTALLATIONS. PAVEMENT RESTORATION WILL BE IN ACCORDANCE WITH FDOT STANDARDS INDEX NO. 125-001. (FLEXIBLE PAVEMENT CUT).
(SEE SHEET R-1 FOR ADDITIONAL RESTORATION REQUIREMENT IN FDOT R/W).

GENERAL NOTES:

1. PROPOSED IMPROVEMENTS ARE IN CLOSE PROXIMITY TO VARIOUS EXISTING UTILITIES. CONTRACTOR IS TO COORDINATE WITH UTILITY COMPANY TO RELOCATE THE UTILITY TO NOT CONFLICT WITH PROPOSED IMPROVEMENTS.
2. THE EXISTENCE AND LOCATION OF ANY UTILITIES SHOWN ON THESE PLANS MUST BE VERIFIED IN THE FIELD BY THE CONTRACTOR PRIOR TO CONSTRUCTION.
3. ALL EXISTING PAVEMENT MARKINGS & SIGNAGE DAMAGED DURING CONSTRUCTION MUST BE REPLACED/RESTORED TO MATCH EXISTING AND BE IN ACCORDANCE WITH MUTCD & APPLICABLE COUNTY, FDOT AND OR CITY TRAFFIC ENGINEERING DEPARTMENT MINIMUM STANDARDS.
4. DEFLECTION OF FRANCHISE UTILITIES TO BE PERFORMED BY SERVICE PROVIDER. CONTRACTOR TO CONTACT THE UTILITY SERVICE PROVIDER AND COORDINATE ANY UTILITY RELOCATIONS REQUIRED.
5. CONTRACTOR TO PROVIDE TEMPORARY SHORING/SHEET PILING TO PROTECT EXISTING INFRASTRUCTURE AS NECESSARY. COSTS ARE TO BE CONSIDERED INCIDENTAL TO THE INSTALLATION OF THE NEW SEWER SYSTEM.
6. ALL RESTORATION REQUIRED IS TO BE CONSIDERED INCIDENTAL TO THE PROPOSED SEWER SYSTEM PIPELINE COSTS AND ADDRESSED IN THE PIPELINE RELATED BID ITEMS.
7. ALL PROPOSED WORK REQUIRING RESTORATION WITHIN FDOT R/W (POWERLINE RD.) IS TO BE IN ACCORDANCE WITH FDOT SPECIFICATIONS AND STANDARDS, LATEST EDITIONS.
8. ANY EXISTING DRIVEWAYS (ASPHALT OR CONCRETE) DAMAGED AS A RESULT OF THE PROPOSED IMPROVEMENTS SHALL BE RESTORED TO MATCH EXISTING TYPE (ASPHALT OR CONCRETE) AND MATCH EXISTING THICKNESS. ASPHALT DRIVEWAYS TO BE A MINIMUM 1-1/2" SP 9.5 ASPHALT OVER MIN. 8" COMPACTED LIMEROCK AND COMPACTED SUBGRADE. CONCRETE DRIVEWAYS SHALL BE MIN. 6" THICK (3,000 PSI MIN./28 DAYS) UNREINFORCED OVER MIN. 4" COMPACTED SAND BASE. COMPACTION TO BE AT LEAST 98% OF THE MAXIMUM DENSITY PER AASHTO T-180 & LBR 40 MIN. SEE FDOT STANDARD INDEX 000-515. DRIVEWAY RESTORATION TO BE CONSIDERED INCIDENTAL TO THE PROPOSED SEWER SYSTEM PIPELINE COSTS IN THE BID.
9. CONTRACTOR TO AVOID IMPACTS TO EXIST. UTILITIES AND EXIST. TREES TO THE GREATEST EXTENT PRACTICAL. CONTRACTOR SHALL COORDINATE ALL REQUIRED FIELD ADJUSTMENTS WITH CITY AND ENGINEER.
10. ALL NEW TREES OR RELOCATED TREES ARE TO BE AT LEAST 5' MINIMUM HORIZONTAL SEPARATION FROM UTILITIES.
11. ALL TREES WITHIN WORK LIMITS SHALL BE PROTECTED PER CITY STANDARDS.

VERTICAL DATUM INFORMATION
ALL ELEVATIONS SHOWN ARE IN NORTH AMERICAN VERTICAL DATUM OF 1988 (NAVD88)

Sunshine 811
Call 811 or visit sunshine811.com two full business days before digging to have buried facilities located and marked.
Check positive response codes before you dig!

BID SET

cma
chen moore and associates
500 West Cypress Creek Road
Suite 600
Ft. Lauderdale, FL 33309
954.730.0707
www.chenmoore.com

REGISTRATION
DAVID EDGARDO CASTRO FELIU, PE
LICENSE NO. 85558
DATE: 01/22/25

DAVID EDGARDO CASTRO FELIU
LICENSE
No. 85558
STATE OF FLORIDA
PROFESSIONAL ENGINEER

THIS SEAL IS ONLY VALID ON PRINTED COPIES THAT ARE DATED WITH THE LICENSEE'S ORIGINAL HAND SIGNATURE. SCANNED OR ELECTRONIC COPIES ARE NOT CONSIDERED SIGNED AND SEALED.

CLIENT
pompano beach
Florida's Warmest Welcome
CITY OF POMPANO BEACH
100 WEST ATLANTIC BOULEVARD
POMPANO BEACH, FL 33060
Phone: 954.786.4600

PROJECT INFORMATION

NON SEWER AREA C SANITARY SEWER IMPROVEMENTS

POMPANO BEACH, FL

PROJECT NUMBER
23-0092.00085

CLIENT PROJECT NUMBER
P331425

VERIFY SCALES
0 1"
IF NOT ONE INCH ON THIS SHEET, ADJUST SCALES ACCORDINGLY

REVISIONS

DATE OF ISSUE
01/22/25

DESIGNED BY
DC

DRAWN BY
JT

CHECKED BY
DC

DRAWING TITLE

SANITARY PLAN AND PROFILE

DRAWING NUMBER
SS-9

Plot Date: 1/22/2025 5:22:40 PM Username: dcastro Layout Name: SS-9
Folder Path: V:\Projects\2023\23-0092.00085 - area c sanitary sewer design services\Design\CAD\Sheets Filename: 23-0092.00085 Force Main.dwg

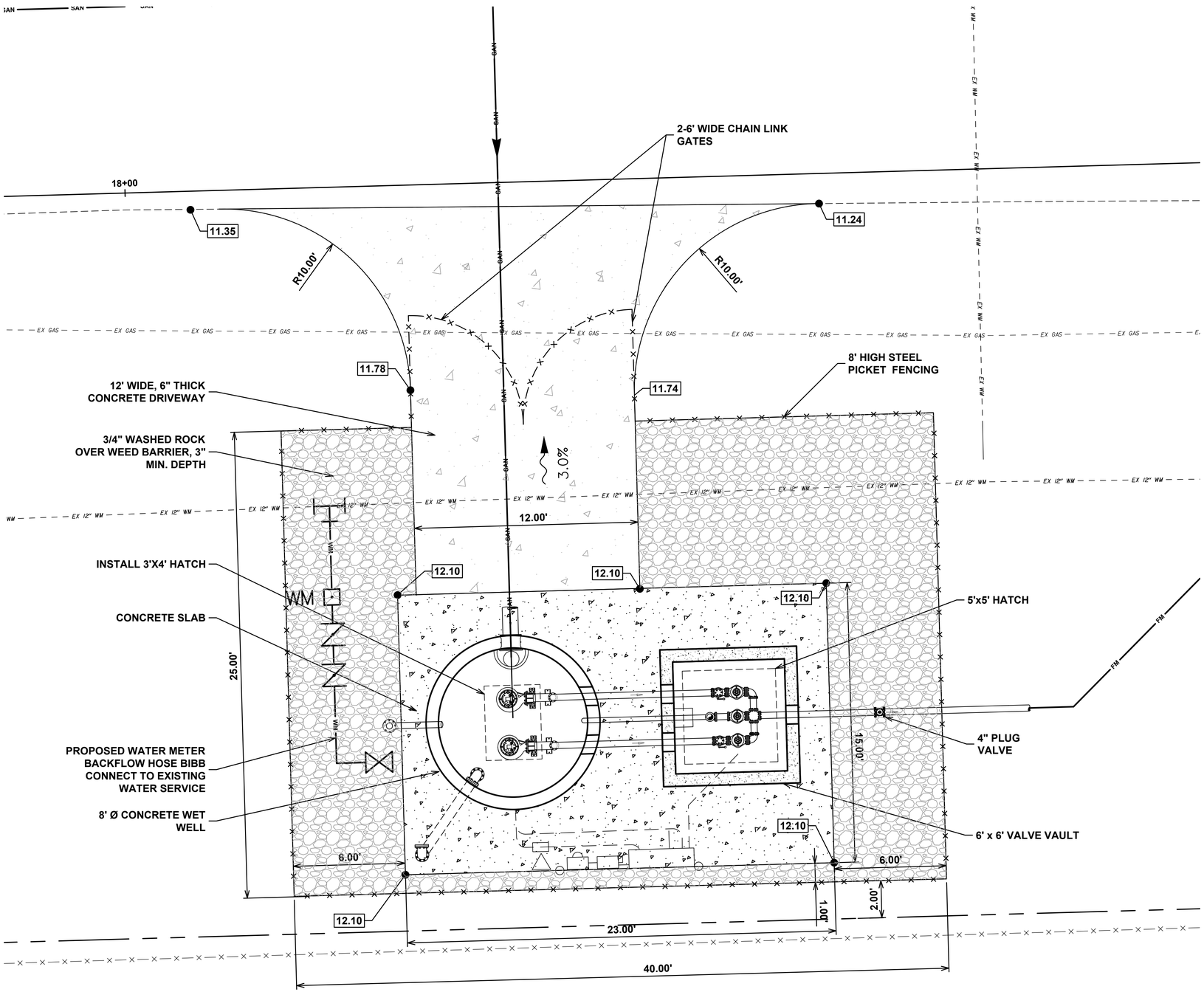

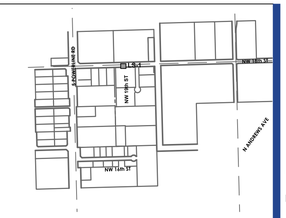

N

GRAPHIC SCALE

0 0.75 3 6

1 INCH = 3 FEET

NOTES:

1. CONCRETE SLAB AND DRIVEWAY AREAS TO BE UNREINFORCED AND CONSTRUCTED OVER MINIMUM 12" COMPACTED SUBGRADE. COMPACTION TO BE MINIMUM OF 98% MAX DENSITY PER AASHTO T-180, LBR 40 MIN.
2. CONCRETE SLAB, WET WELL AND VALVE VAULT TO BE SET AT ELEVATION 12.10' NAVD (100 YEAR FLOOD ELEVATION= 12.00 NAVD).
3. GRADE AWAY FROM PROPOSED CONCRETE SURFACES TO MATCH EXISTING ELEVATIONS @ 4:1 MAXIMUM. RESTORE ALL EXISTING AREAS DAMAGED DURING CONSTRUCTION TO PRE-CONSTRUCTION CONDITIONS OR BETTER.
4. ALL MECHANICAL JOINTS ARE TO BE RESTRAINED

VERTICAL DATUM INFORMATION
ALL ELEVATIONS SHOWN ARE IN NORTH AMERICAN VERTICAL DATUM OF 1988 (NAVD88)

Sunshine 811

Call 811 or visit sunshine811.com two full business days before digging to have buried facilities located and marked.

Check positive response codes before you dig!

BID SET

cma
chen moore and associates
500 West Cypress Creek Road
Suite 600
Ft. Lauderdale, FL 33309
954.730.0707
www.chenmoore.com

REGISTRATION
DAVID EDGARDO CASTRO FELIU, PE
LICENSE NO. 85558
DATE: 01/03/25

DAVID EDGARDO CASTRO FELIU ★ LICENSE ★ No. 85558 ★ STATE OF FLORIDA ★ PROFESSIONAL ENGINEER

THIS SEAL IS ONLY VALID ON PRINTED COPIES THAT ARE DATED WITH THE LICENSEE'S ORIGINAL HAND SIGNATURE. SCANNED OR ELECTRONIC COPIES ARE NOT CONSIDERED SIGNED AND SEALED.

CLIENT
pompano beach
Florida's Warmest Welcome
CITY OF POMPANO BEACH
100 WEST ATLANTIC BOULEVARD
POMPANO BEACH, FL 33060
Phone: 954.786.4600

PROJECT INFORMATION

NON SEWER AREA C SANITARY SEWER IMPROVEMENTS

POMPANO BEACH, FL

PROJECT NUMBER
23-0092.00085

CLIENT PROJECT NUMBER
P331425

VERIFY SCALES
0 1"
IF NOT ONE INCH ON THIS SHEET, ADJUST SCALES ACCORDINGLY

REVISIONS

DATE OF ISSUE
01/03/25

DESIGNED BY
DC

DRAWN BY
JT

CHECKED BY
DC

DRAWING TITLE

LIFT STATION PLAN

DRAWING NUMBER
LS-1

Plot Date: 1/8/2025 6:10:13 PM Username: JTarno Layout Name: LS-1
Folder Path: V:\Projects\2023\23-0092.00085 - area c sanitary sewer design services\Design\CAD\Sheets Filename: 23-0092.00085 Lift Station Plan.dwg

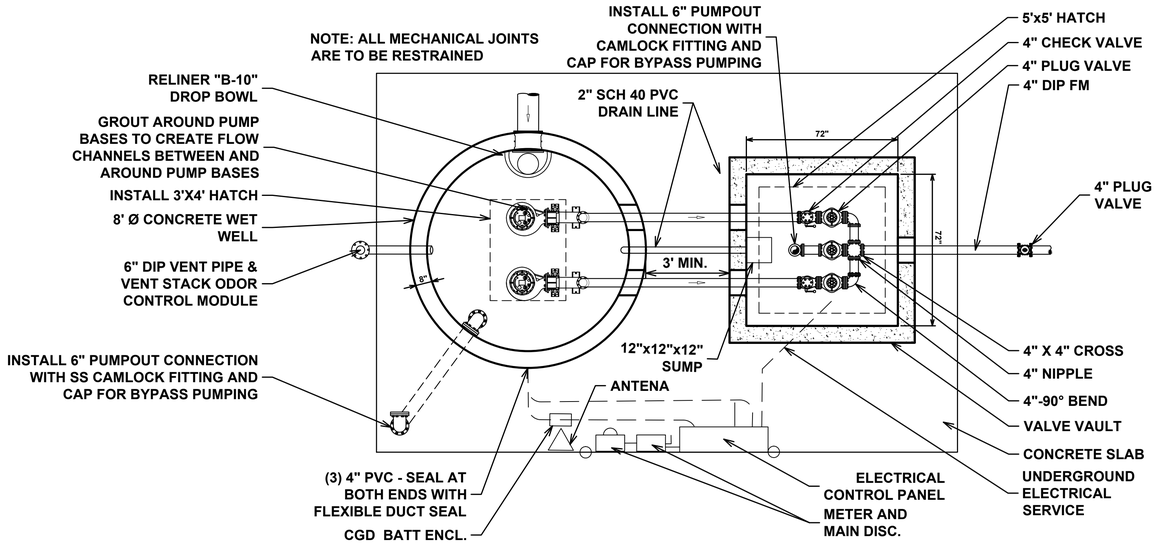

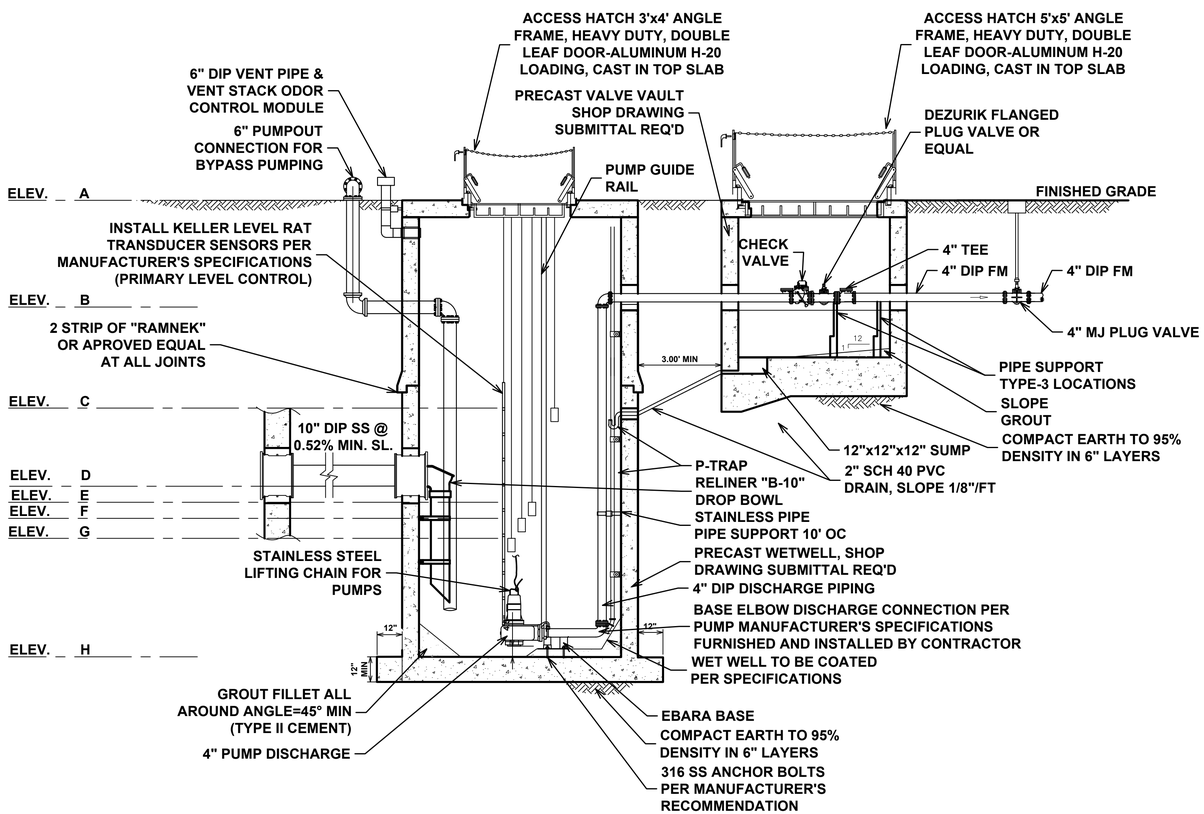

PUMP DATA TABLE

PEAK DAILY FLOW	G.P.M.	109
PUMP OPERATING POINT (PEAK PRESSURE)	G.P.M.	146 GPM @ 45 TDH
PUMP OPERATING POINT (AVERAGE PRESSURE)	G.P.M.	150 GPM @ 44.5 TDH
PUMP OPERATING POINTS (LOW PRESSURE)	G.P.M.	154 GPM @ 44 TDH
PUMP CYCLE TIME	MINUTES	8.0
WETWELL DIAMETER "A"	FEET	8
PUMP MODEL	CODE	EBARA 80DLF63.7 OR EQUAL
IMPELLER	MM	189
B.H.P.	HP	5
PUMP WEIGHT	LBS	209
PUMP EFFICIENCY	%	48.0
DISCHARGE PIPE DIAMETER	INCHES	4
ELECTRICAL SERVICE	AMP.	3
R.P.M.	RPM	1880

ELEVATION TABLE

FINISH GRADE	EL. 'A'	12.10
FORCE MAIN DIAMETER	INCHES	4.00
℄ DISCHARGE PIPE	EL. 'B'	8.00
EMERGENCY ALARM	EL. 'C'	0.55
INFLUENT PIPE	EL. 'D'	1.05
LAG PUMP ON	EL. 'E'	0.05
LEAD PUMP ON	EL. 'F'	-0.45
PUMPS OFF	EL. 'G'	-3.45
WETWELL BOTTOM SLAB	EL. 'H'	-4.95

VERTICAL DATUM INFORMATION
ALL ELEVATIONS SHOWN ARE IN NORTH AMERICAN VERTICAL DATUM OF 1988 (NAVD88)

Sunshine 811
Call 811 or visit sunshine811.com two full business days before digging to have buried facilities located and marked.
Check positive response codes before you dig!

BID SET

cma
chen moore and associates
500 West Cypress Creek Road
Suite 600
Ft. Lauderdale, FL 33309
954.730.0707
www.chenmoore.com

REGISTRATION
DAVID EDGARDO CASTRO FELIU, PE
LICENSE NO. 85558
DATE: 01/03/25

DAVID EDGARDO CASTRO FELIU ★ LICENSE ★ No. 85558 ★ STATE OF FLORIDA ★ PROFESSIONAL ENGINEER

THIS SEAL IS ONLY VALID ON PRINTED COPIES THAT ARE DATED WITH THE LICENSEE'S ORIGINAL HAND SIGNATURE. SCANNED OR ELECTRONIC COPIES ARE NOT CONSIDERED SIGNED AND SEALED.

CLIENT
pompano beach
Florida's Warmest Welcome
CITY OF POMPANO BEACH
100 WEST ATLANTIC BOULEVARD
POMPANO BEACH, FL 33060
Phone: 954.786.4600

PROJECT INFORMATION

NON SEWER AREA C SANITARY SEWER IMPROVEMENTS

POMPANO BEACH, FL

PROJECT NUMBER
23-0092.00085

CLIENT PROJECT NUMBER
P331425

VERIFY SCALES
0 — 1"
IF NOT ONE INCH ON THIS SHEET, ADJUST SCALES ACCORDINGLY

REVISIONS

DATE OF ISSUE
01/03/25

DESIGNED BY
DC

DRAWN BY
JT

CHECKED BY
DC

DRAWING TITLE

LIFT STATION PLAN AND SECTION

DRAWING NUMBER
LS-2

Plot Date: 1/8/2025 6:10:20 PM Username: JTamo Layout Name: LS-2
Folder Path: V:\Projects\2023\23-0092.00085 - area c sanitary sewer design services\Design\CAD\Sheets Filename: 23-0092.00085 Lift Station Plan.dwg

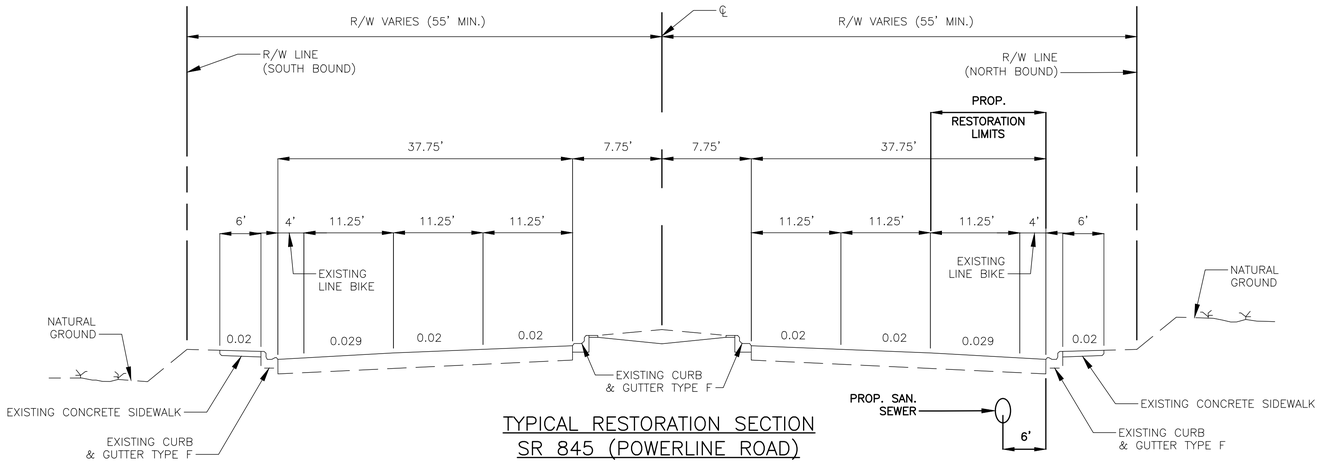

TYPICAL RESTORATION SECTION SR 845 (POWERLINE ROAD)

SCALE: N.T.S.

NOTES:

PROPOSED RESTORATION TO BE ACCORDANCE WITH FDOT STANDARDS NO. 125–001 (FLEXIBLE PAVEMENT CUT), SEE DETAILS BELOW THIS SHEET.

MILLING
MILL EXISTING ASPHALT PAVEMENT OUTSIDE OF THE TRENCH RESTORATION LIMITS (2" AVG DEPTH).

RESURFACING
RESURFACE MILLED AREAS WITH 1" TYPE SP 9.5 (TRAFFIC C) (100 LBS/SY) AND 1" TYPE FC–9.5 (110 LBS/SY) (RUBBER) (PG 76–22).

TRENCH RESTORATION LIMITS (NEW PAVEMENT OVER TRENCHES)
OPTIONAL BASE GROUP 12 (7.5" TYPE B–12.5 ONLY) WITH 2" TYPE SP 9.5 (2 LIFTS) (TRAFFIC C) (200 LBS/SY) AND FRICTION COURSE 1" FC 9.5 (110 LBS/SY) (RUBBER) (PG 76–22).

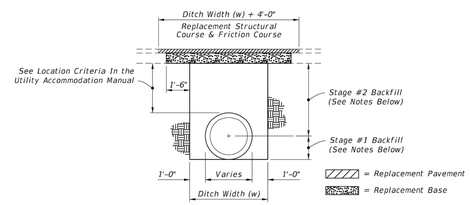

NOTES:
PAVEMENT REMOVAL AND REPLACEMENT

1. Pavement shall be mechanically sawed.
2. The replacement asphalt shall match the existing structural and friction courses for type and thickness in accordance with current FDOT asphalt mix specifications.
3. The new base materials shall be either of the same type and composition as the materials removed or of equal or greater structural adequacy.

BACKFILL OPTION

1. COMPACTED AND STABILIZED FILL
   A. Place backfill material in accordance with Specification 125.
   B. In Stage #1, construct compacted fill beneath the haunches of the pipe, using mechanical tamps suitable for this purpose. This compaction applies to the material placed beneath the haunches of the pipe and above any bedding.
   C. In Stage #2, construct compacted fill along the sides of the pipe and up to the bottom of the base, with the upper 12" receiving Type B Stabilization. In lieu of Type B Stabilization, the Contractor may construct using Optional Base Group 3.
2. FLOWABLE FILL
   A. If compaction can not be achieved through normal mechanical methods then flowable fill may be used.
   B. Flowable fill is to be placed in accordance with Specification 121, as approved by the Engineer.
   C. Do not allow the utility being installed to float. If a method is provided to prevent flotation from occurring, Stages #1 and #2 can be combined, if approved by the Engineer.
   D. In Stage #1, place flowable fill midway up on both sides of the utility. Allow to harden before placing Stage #2.
   E. In Stage #2, place flowable fill to the bottom of the existing base course.

FLEXIBLE PAVEMENT CUT

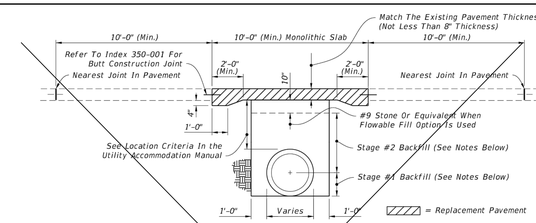

NOTES:
PAVEMENT REMOVAL AND REPLACEMENT

1. High early strength cement concrete (3000 psi) meeting the requirements of Specification 346 shall be used for rigid pavement replacement.
2. Pavement shall be mechanically sawed and restored to conform with existing pavement joints within 12 hours. (See Index 350-001)

BACKFILL OPTION

1. GRANULAR BACKFILL
   A. Any edgedrain system that is removed shall be replaced with the same type materials. Any edgedrain system that is damaged shall be repaired with methods approved by the Engineer.
   B. Fill material shall be placed in accordance with the Standard Specifications. Fill material shall be special select soil in accordance with Index 350-001.
   C. In Stage #1, construct compacted fill beneath the haunches of the pipe, using mechanical tamps suitable for this purpose. This compaction applies to the material placed beneath the haunches of the pipe and above any bedding.
   D. In Stage #2, construct fill along the sides of the pipe and up to the bottom of replacement pavement.
2. FLOWABLE FILL
   A. If mechanical compaction can not be achieved through normal mechanical methods then flowable fill may be used.
   B. Flowable fill is to be placed in accordance with Specification 121, as approved by the Engineer.
   C. Do not allow the utility being installed to float. If a method is provided to prevent flotation from occurring, Stages #1 and #2 can be combined, if approved by the Engineer.
   D. In Stage #1, place flowable fill midway up on both sides of the utility. Allow to harden before placing Stage #2.
   E. In Stage #2, place flowable fill to the bottom of the stone layer.

RIGID PAVEMENT CUT

GENERAL NOTES

1. The details provided in this Index apply to cases in which jack and bore or directional boring methods are not required by the Engineer.
2. Flowable fill shall not be placed directly over loose, or high plastic, or muck material (see Index 120-001) which will cause settlement due to fill weight. Where highly compressible material exists, the amount, shape and depth of flowable fill must be engineered to prevent pavement settlement.
3. These details do not apply to utility cuts longitudinal to the centerline of the roadway which may require the additional use of geotextiles, special bedding and backfill, or other special requirements.
4. Method of construction must be approved by the Engineer.
5. Some pipe may require special granular backfill up to 6" above top of pipe. Geotextiles may be required to encapsulate the special granular material.
6. Where asphalt concrete overlays exist over full slab concrete pavement, the replacement pavement shall have an overlay constructed over the replacement slab. The overlay shall match the existing asphalt pavement thickness. The replacement friction course shall match the existing friction course, except structural course may be used in lieu of dense graded friction course.
7. All shoulder pavement, curb, curb and gutter, and their substructure disturbed by utility trench cut construction shall be restored in kind.
8. The use of flowable fill to reduce the time traffic is taken off a facility is acceptable but must have prior approval by the Engineer. Flowable fill use is allowed only when properly engineered for pavement crossings, whether straight or diagonal, and shall not be installed for significant depths or lengths. The maximum length shall be fifty (50) feet and a maximum depth of six (6) feet unless supported by an engineering document prepared by a registered professional engineer that specializes in soils engineering. The engineering document shall address the evaluation of local groundwater flow interruption and settlement potential.
9. Excavatable flowable fill is to be used when the flowable fill option is selected.

TRENCH CUTS AND RESTORATIONS ACROSS ROADWAYS

LAST REVISION	REVISION	DESCRIPTION:	FDOT FY 2023-24 STANDARD PLANS	UTILITY ADJUSTMENTS THRU EXISTING PAVEMENT	INDEX	SHEET
11/01/17					125-001	1 of 2

10/06/2022 1:31:11 PM

Plot Date: 11/16/2024 12:15:27 AM Username: jspicer Layout Name: SEC-1
Folder Path: V:\Projects\2023\23-0092.00085 - area c sanitary sewer design services\Design\CAD\Sheets Filename: 23-0092.00085 Typical Section.dwg

cma
chen moore and associates
500 West Cypress Creek Road
Suite 600
Ft. Lauderdale, FL 33309
954.730.0707
www.chenmoore.com

REGISTRATION
DAVID EDGARDO CASTRO FELIU, PE
LICENSE NO. 85558
DATE: 11/08/24

DAVID EDGARDO CASTRO FELIU LICENSE No. 85558 STATE OF FLORIDA PROFESSIONAL ENGINEER

THIS SEAL IS ONLY VALID ON PRINTED COPIES THAT ARE DATED WITH THE LICENSEE'S ORIGINAL HAND SIGNATURE. SCANNED OR ELECTRONIC COPIES ARE NOT CONSIDERED SIGNED AND SEALED.

CLIENT
pompano beach
Florida's Warmest Welcome
CITY OF POMPANO BEACH
100 WEST ATLANTIC BOULEVARD
POMPANO BEACH, FL 33060
Phone: 954.786.4600

PROJECT INFORMATION
NON SEWER AREA C SANITARY SEWER IMPROVEMENTS
POMPANO BEACH, FL

PROJECT NUMBER
23-0092.00085

CLIENT PROJECT NUMBER
P331425

VERIFY SCALES
0 — 1"
IF NOT ONE INCH ON THIS SHEET, ADJUST SCALES ACCORDINGLY

REVISIONS

DATE OF ISSUE
11/08/24

DESIGNED BY
DC

DRAWN BY
JT

CHECKED BY
DC

DRAWING TITLE
TYPICAL SECTION

DRAWING NUMBER
SEC-1

VERTICAL DATUM INFORMATION
ALL ELEVATIONS SHOWN ARE IN NORTH AMERICAN VERTICAL DATUM OF 1988 (NAVD88)

Sunshine811
Call 811 or visit sunshine811.com two full business days before digging to have buried facilities located and marked.
Check positive response codes before you dig!

BID SET

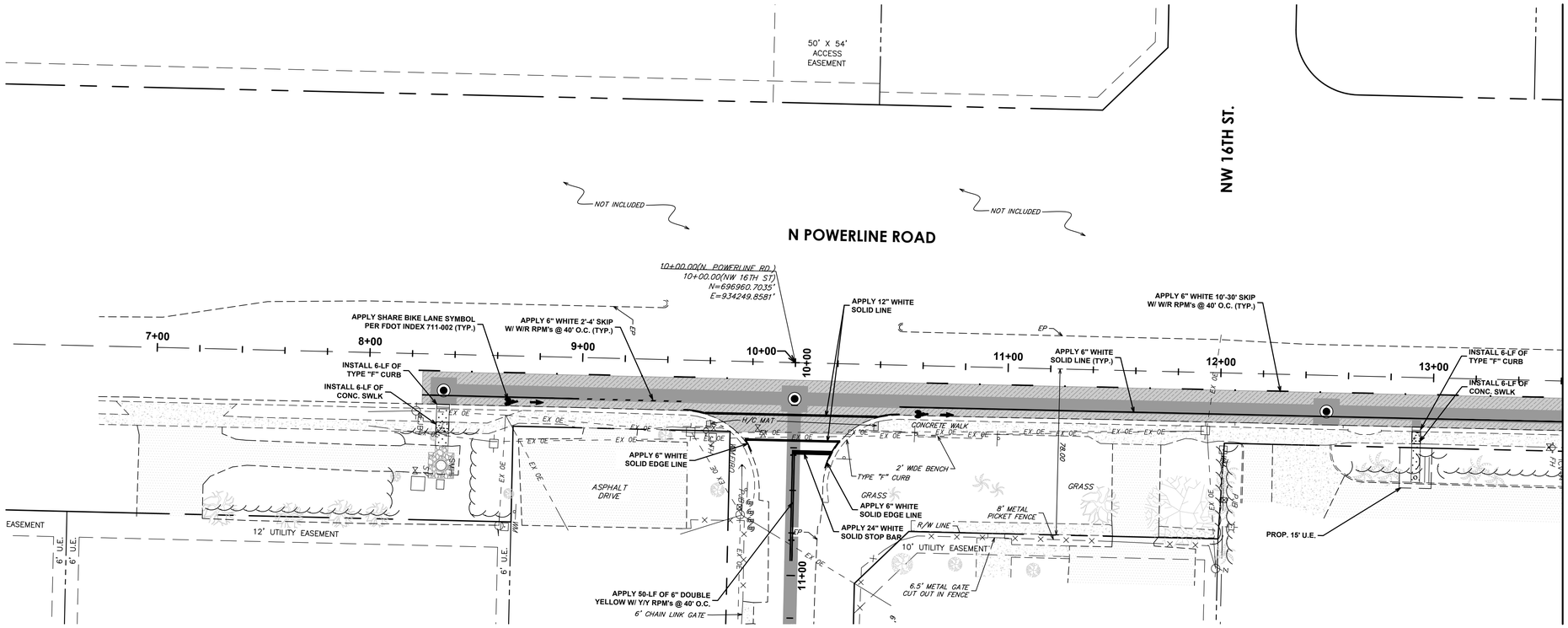

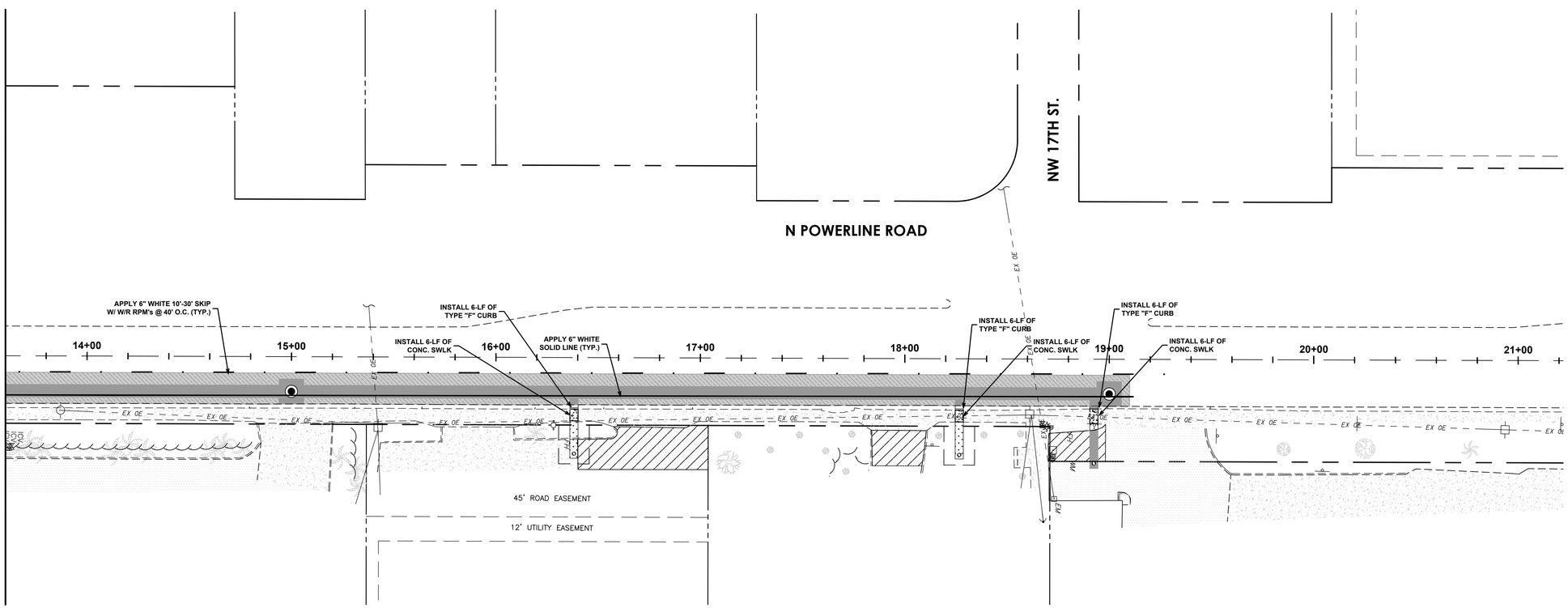

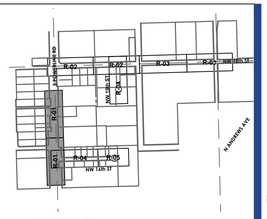

KEY MAP
N.T.S.

GRAPHIC SCALE
0 15 30 60
1 INCH = 30 FEET

LEGEND

- PROPOSED ASPHALT FULL DEPTH RESTORATION
- PROPOSED MILLING & RESURFACING
- PROPOSED SOD
- PROPOSED CONCRETE

GRAPHIC SCALE
0 15 30 60
1 INCH = 30 FEET

LEGEND

- PROPOSED ASPHALT FULL DEPTH RESTORATION
- PROPOSED MILLING & RESURFACING
- PROPOSED SOD
- PROPOSED CONCRETE

VERTICAL DATUM INFORMATION
ALL ELEVATIONS SHOWN ARE IN NORTH AMERICAN VERTICAL DATUM OF 1988 (NAVD88)

Sunshine 811
Call 811 or visit sunshine811.com two full business days before digging to have buried facilities located and marked.
Check positive response codes before you dig!

BID SET

cma
chen moore and associates
500 West Cypress Creek Road
Suite 600
Ft. Lauderdale, FL 33309
954.730.0707
www.chenmoore.com

REGISTRATION
DAVID EDGARDO CASTRO FELIU, PE
LICENSE NO. 85558
DATE: 11/08/24

DAVID EDGARDO CASTRO FELIU ★ LICENSE ★ No. 85558 ★ STATE OF FLORIDA ★ PROFESSIONAL ENGINEER

THIS SEAL IS ONLY VALID ON PRINTED COPIES THAT ARE DATED WITH THE LICENSEE'S ORIGINAL HAND SIGNATURE. SCANNED OR ELECTRONIC COPIES ARE NOT CONSIDERED SIGNED AND SEALED.

CLIENT
pompano beach
Florida's Warmest Welcome
CITY OF POMPANO BEACH
100 WEST ATLANTIC BOULEVARD
POMPANO BEACH, FL 33060
Phone: 954.786.4600

PROJECT INFORMATION

NON SEWER AREA C SANITARY SEWER IMPROVEMENTS

POMPANO BEACH, FL

PROJECT NUMBER
23-0092.00085

CLIENT PROJECT NUMBER
P331425

VERIFY SCALES
0 1"
IF NOT ONE INCH ON THIS SHEET, ADJUST SCALES ACCORDINGLY

REVISIONS

DATE OF ISSUE
11/08/24

DESIGNED BY
DC

DRAWN BY
JT

CHECKED BY
DC

DRAWING TITLE
RESTORATION PLAN

DRAWING NUMBER
R-1
20 OF 43

Plot Date: 11/16/2024 12:16:09 AM Username: dcastro Layout Name: R-1
Folder Path: V:\Projects\2023\23-0092.00085 - area c sanitary sewer design services\Design\CAD\Sheets Filename: 23-0092.00085 Restoration.dwg

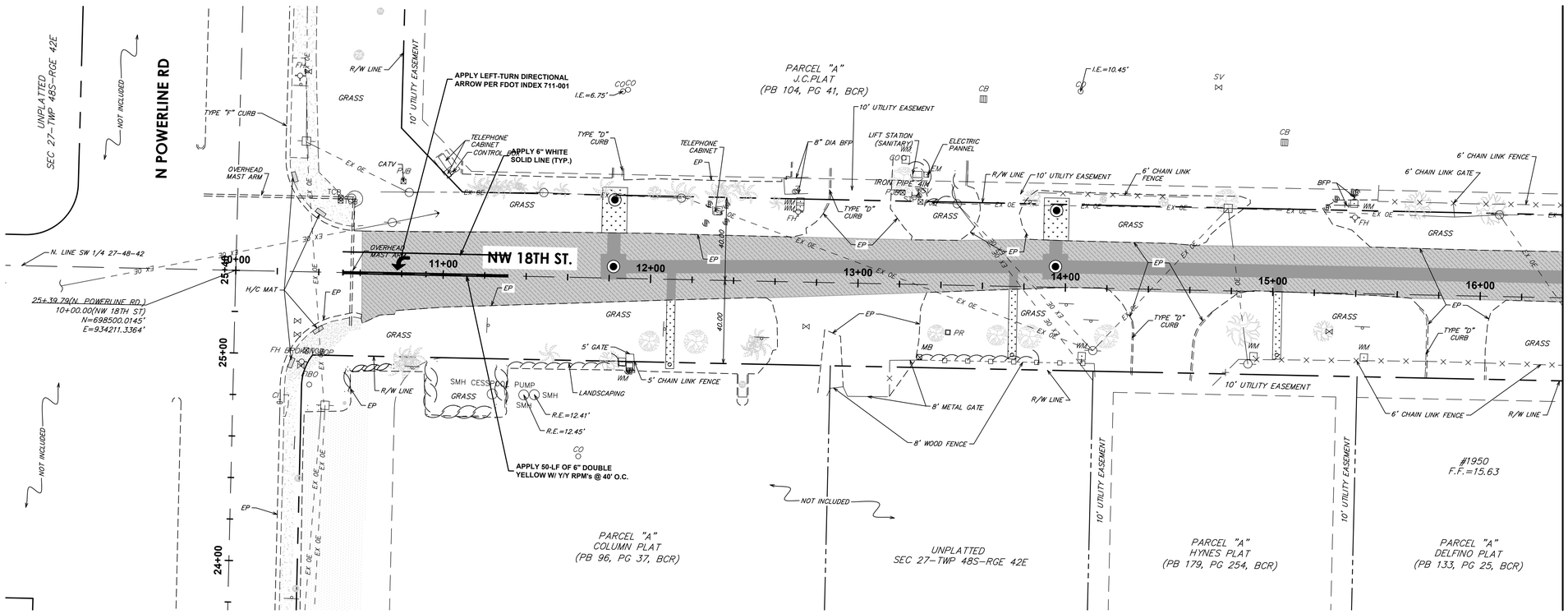

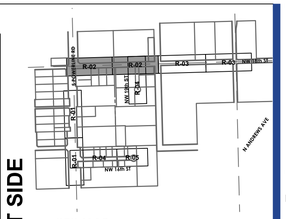

KEY MAP

N.T.S.

N

GRAPHIC SCALE

0 15 30 60

1 INCH = 30 FEET

LEGEND

- PROPOSED ASPHALT FULL DEPTH RESTORATION
- PROPOSED MILLING & RESURFACING
- PROPOSED SOD
- PROPOSED CONCRETE

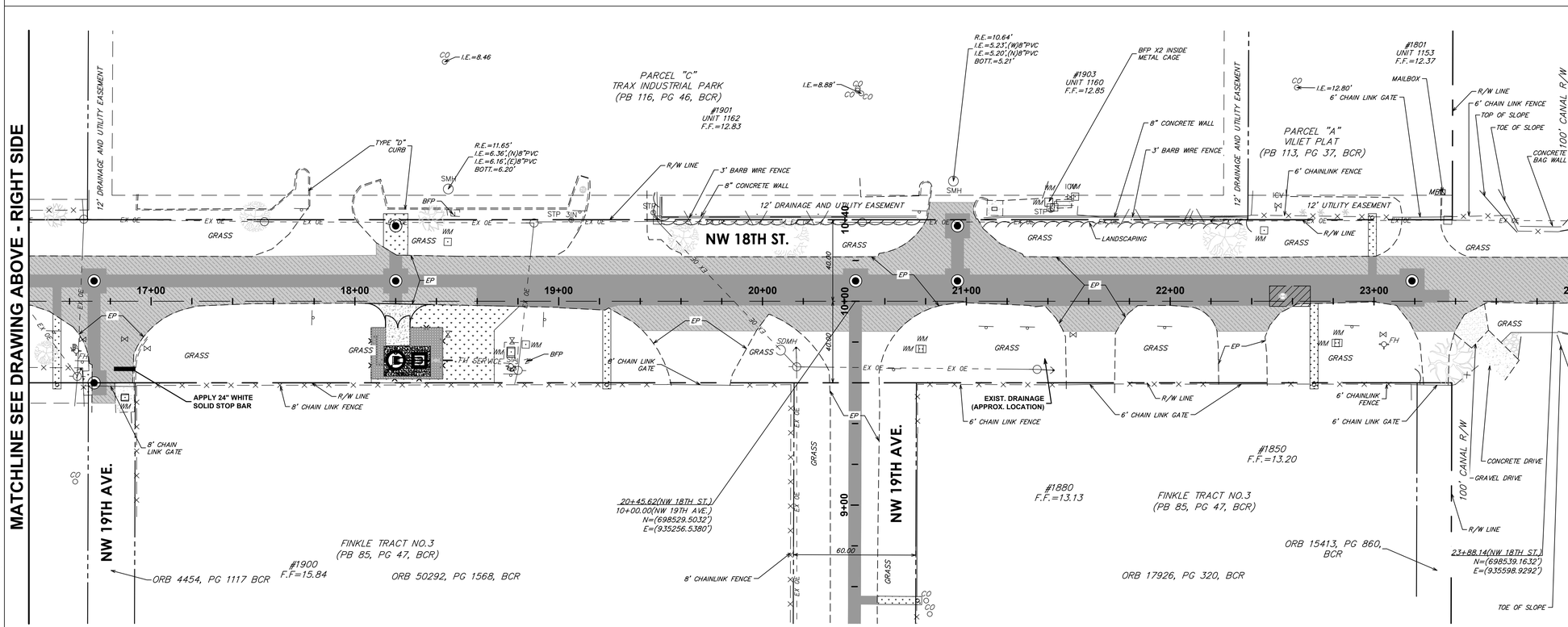

N

GRAPHIC SCALE

0 15 30 60

1 INCH = 30 FEET

LEGEND

- PROPOSED ASPHALT FULL DEPTH RESTORATION
- PROPOSED MILLING & RESURFACING
- PROPOSED SOD
- PROPOSED CONCRETE

VERTICAL DATUM INFORMATION
ALL ELEVATIONS SHOWN ARE IN NORTH AMERICAN VERTICAL DATUM OF 1988 (NAVD88)

Sunshine 811
Call 811 or visit sunshine811.com two full business days before digging to have buried facilities located and marked.
Check positive response codes before you dig!

BID SET

cma
chen moore and associates
500 West Cypress Creek Road
Suite 600
Ft. Lauderdale, FL 33309
954.730.0707
www.chenmoore.com

REGISTRATION
DAVID EDGARDO CASTRO FELIU, PE
LICENSE NO. 85558
DATE: 11/08/24

DAVID EDGARDO CASTRO FELIU LICENSE No. 85558 STATE OF FLORIDA PROFESSIONAL ENGINEER

THIS SEAL IS ONLY VALID ON PRINTED COPIES THAT ARE DATED WITH THE LICENSEE'S ORIGINAL HAND SIGNATURE. SCANNED OR ELECTRONIC COPIES ARE NOT CONSIDERED SIGNED AND SEALED.

CLIENT
pompano beach
Florida's Warmest Welcome
CITY OF POMPANO BEACH
100 WEST ATLANTIC BOULEVARD
POMPANO BEACH, FL 33060
Phone: 954.786.4600

PROJECT INFORMATION

NON SEWER AREA C SANITARY SEWER IMPROVEMENTS

POMPANO BEACH, FL

PROJECT NUMBER
23-0092.00085

CLIENT PROJECT NUMBER
P331425

VERIFY SCALES
0 — 1"
IF NOT ONE INCH ON THIS SHEET, ADJUST SCALES ACCORDINGLY

REVISIONS

DATE OF ISSUE
11/08/24

DESIGNED BY
DC

DRAWN BY
JT

CHECKED BY
DC

DRAWING TITLE
RESTORATION PLAN

DRAWING NUMBER
R-2
21 OF 43

Plot Date: 11/16/2024 12:36:17 AM Username: dcastro Layout Name: R-2
Folder Path: V:\Projects\2023\23-0092.00085 - area c sanitary sewer design services\Design\CAD\Sheets Filename: 23-0092.00085 Restoration.dwg

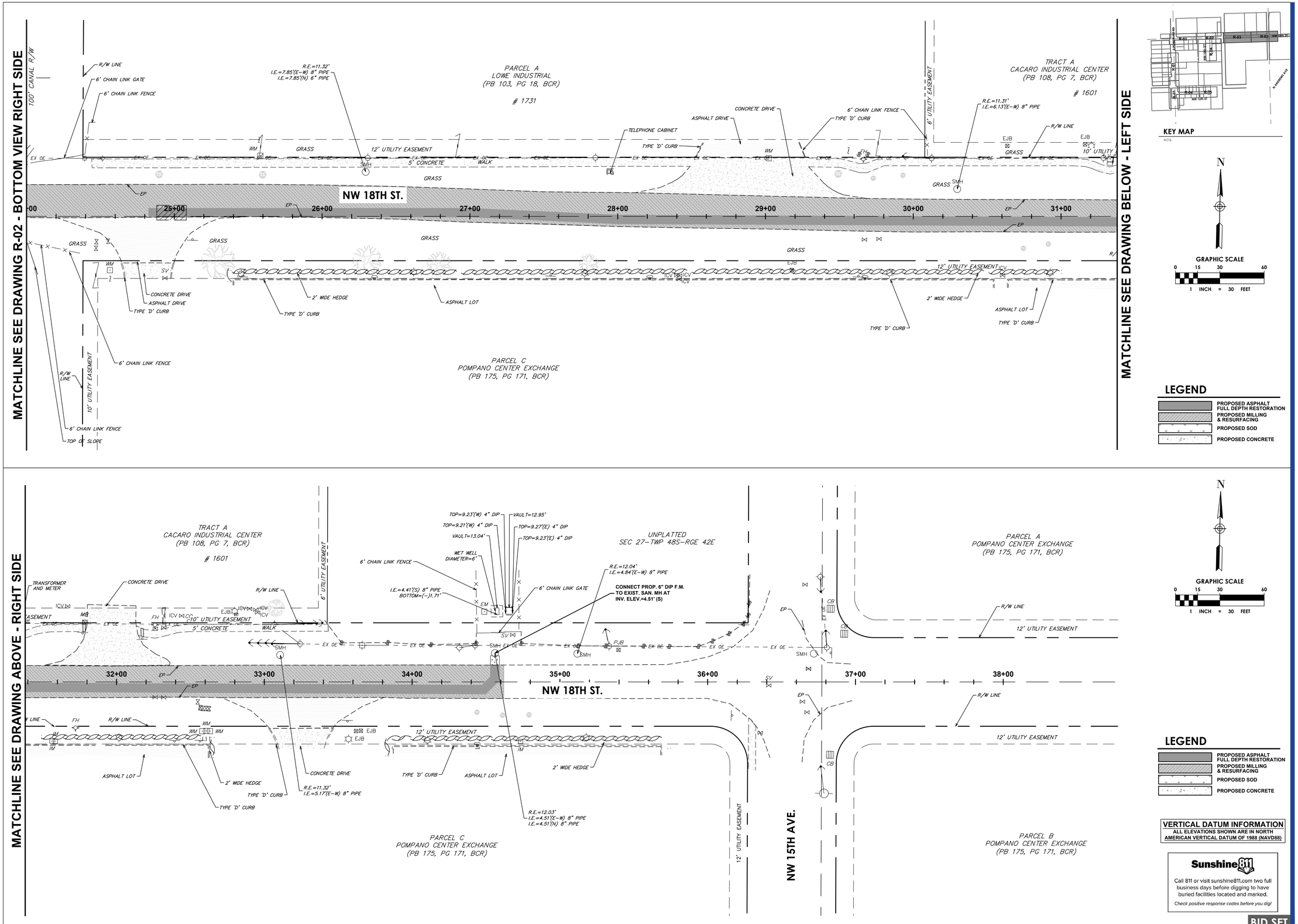

KEY MAP
N.T.S.

LEGEND

- PROPOSED ASPHALT FULL DEPTH RESTORATION
- PROPOSED MILLING & RESURFACING
- PROPOSED SOD
- PROPOSED CONCRETE

VERTICAL DATUM INFORMATION
ALL ELEVATIONS SHOWN ARE IN NORTH AMERICAN VERTICAL DATUM OF 1988 (NAVD88)

Sunshine 811
Call 811 or visit sunshine811.com two full business days before digging to have buried facilities located and marked.
Check positive response codes before you dig!

BID SET

cma
chen moore and associates
500 West Cypress Creek Road
Suite 600
Ft. Lauderdale, FL 33309
954.730.0707
www.chenmoore.com

REGISTRATION
DAVID EDGARDO CASTRO FELIU, PE
LICENSE NO. 85558
DATE: 11/08/24

DAVID EDGARDO CASTRO FELIU
LICENSE
No. 85558
STATE OF FLORIDA
PROFESSIONAL ENGINEER

THIS SEAL IS ONLY VALID ON PRINTED COPIES THAT ARE DATED WITH THE LICENSEE'S ORIGINAL HAND SIGNATURE. SCANNED OR ELECTRONIC COPIES ARE NOT CONSIDERED SIGNED AND SEALED.

CLIENT
pompano beach
Florida's Warmest Welcome
CITY OF POMPANO BEACH
100 WEST ATLANTIC BOULEVARD
POMPANO BEACH, FL 33060
Phone: 954.786.4600

PROJECT INFORMATION

NON SEWER AREA C SANITARY SEWER IMPROVEMENTS

POMPANO BEACH, FL

PROJECT NUMBER
23-0092.00085

CLIENT PROJECT NUMBER
P331425

VERIFY SCALES
0 — 1"
IF NOT ONE INCH ON THIS SHEET, ADJUST SCALES ACCORDINGLY

REVISIONS

DATE OF ISSUE
11/08/24

DESIGNED BY
DC

DRAWN BY
JT

CHECKED BY
DC

DRAWING TITLE
RESTORATION PLAN

DRAWING NUMBER
R-3
22 OF 43

Plot Date: 11/16/2024 12:36:23 AM Username: dcastro Layout Name: R-3
Folder Path: V:\Projects\2023\23-0092.00085 - area c sanitary sewer design services\Design\CAD\Sheets Filename: 23-0092.00085 Restoration.dwg

MATCHLINE SEE DRAWING R-02

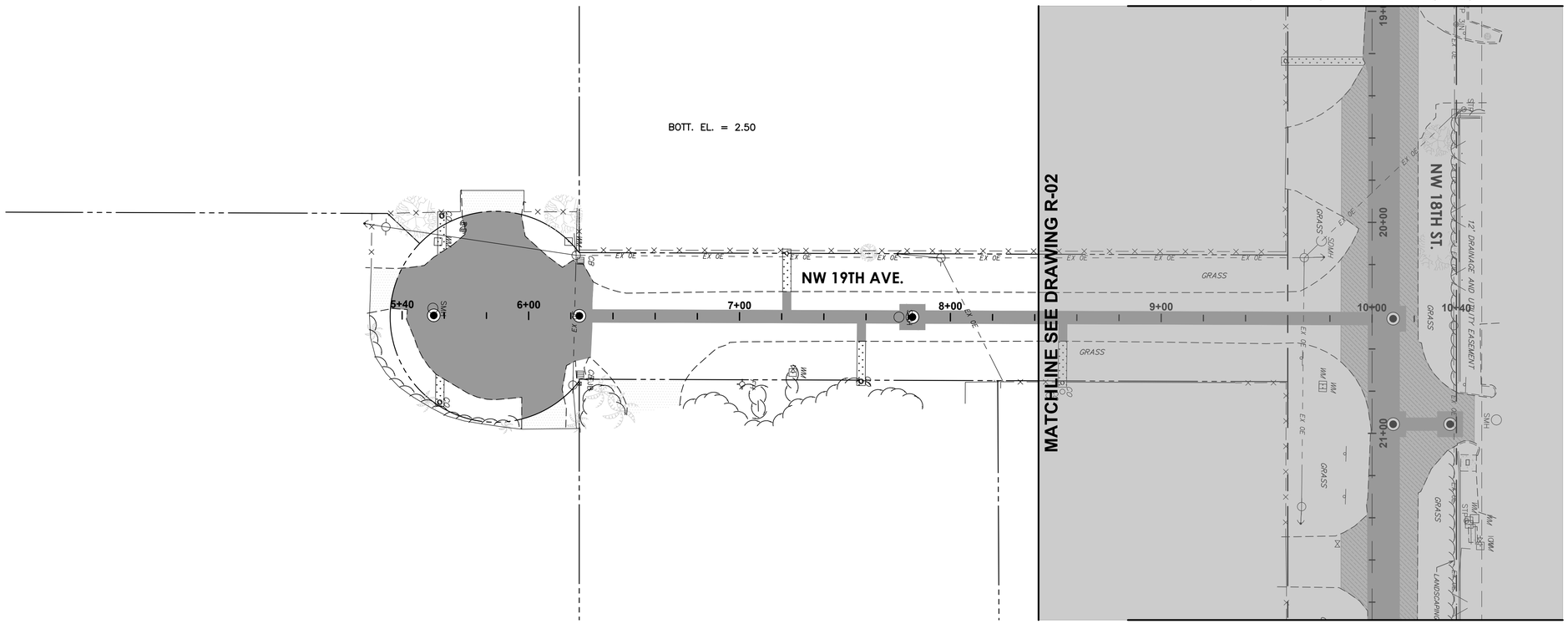

MATCHLINE SEE DRAWING R-02

MATCHLINE SEE DRAWING R-01

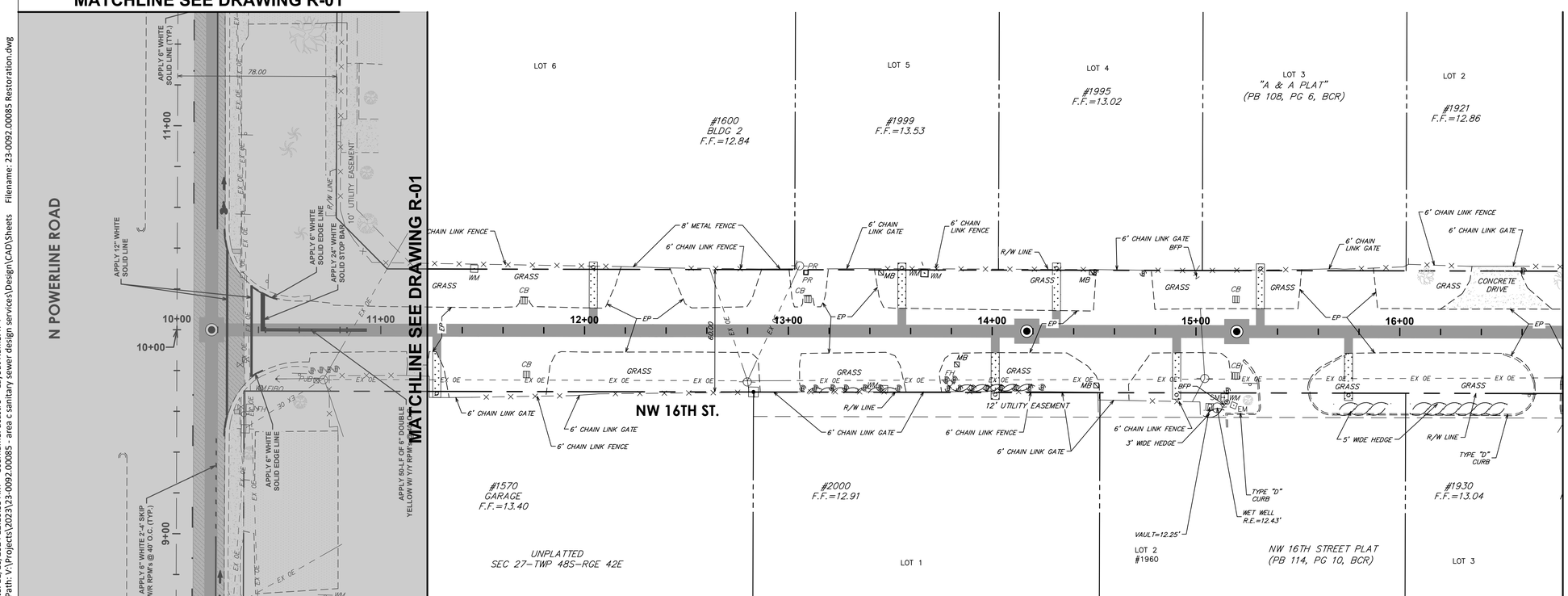

MATCHLINE SEE DRAWING R-01

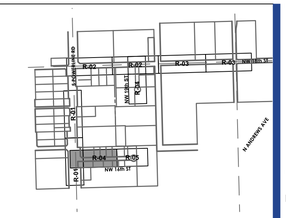

KEY MAP
N.T.S.

GRAPHIC SCALE
0 15 30 60
1 INCH = 30 FEET

LEGEND

- PROPOSED ASPHALT FULL DEPTH RESTORATION
- PROPOSED MILLING & RESURFACING
- PROPOSED SOD
- PROPOSED CONCRETE

GRAPHIC SCALE
0 15 30 60
1 INCH = 30 FEET

LEGEND

- PROPOSED ASPHALT FULL DEPTH RESTORATION
- PROPOSED MILLING & RESURFACING
- PROPOSED SOD
- PROPOSED CONCRETE

VERTICAL DATUM INFORMATION
ALL ELEVATIONS SHOWN ARE IN NORTH AMERICAN VERTICAL DATUM OF 1988 (NAVD88)

Sunshine 811
Call 811 or visit sunshine811.com two full business days before digging to have buried facilities located and marked.
Check positive response codes before you dig!

BID SET

cma
chen moore and associates
500 West Cypress Creek Road
Suite 600
Ft. Lauderdale, FL 33309
954.730.0707
www.chenmoore.com

REGISTRATION
DAVID EDGARDO CASTRO FELIU, PE
LICENSE NO. 85558
DATE: 11/08/24

DAVID EDGARDO CASTRO FELIU
LICENSE
No. 85558
STATE OF FLORIDA
PROFESSIONAL ENGINEER

THIS SEAL IS ONLY VALID ON PRINTED COPIES THAT ARE DATED WITH THE LICENSEE'S ORIGINAL HAND SIGNATURE. SCANNED OR ELECTRONIC COPIES ARE NOT CONSIDERED SIGNED AND SEALED.

CLIENT
pompano beach
Florida's Warmest Welcome
CITY OF POMPANO BEACH
100 WEST ATLANTIC BOULEVARD
POMPANO BEACH, FL 33060
Phone: 954.786.4600

PROJECT INFORMATION

NON SEWER AREA C SANITARY SEWER IMPROVEMENTS

POMPANO BEACH, FL

PROJECT NUMBER
23-0092.00085

CLIENT PROJECT NUMBER
P331425

VERIFY SCALES
0 1"
IF NOT ONE INCH ON THIS SHEET, ADJUST SCALES ACCORDINGLY

REVISIONS

DATE OF ISSUE
11/08/24

DESIGNED BY
DC

DRAWN BY
JT

CHECKED BY
DC

DRAWING TITLE
RESTORATION PLAN

DRAWING NUMBER
R-4
23 OF 43

Plot Date: 11/16/2024 12:16:33 AM Username: dcastro Layout Name: R-4
Folder Path: V:\Projects\2023\23-0092.00085 - area c sanitary sewer design services\Design\CAD\Sheets Filename: 23-0092.00085 Restoration.dwg

MATCHLINE SEE DRAWING R-04 BOTTOM VIEW - RIGHT SIDE

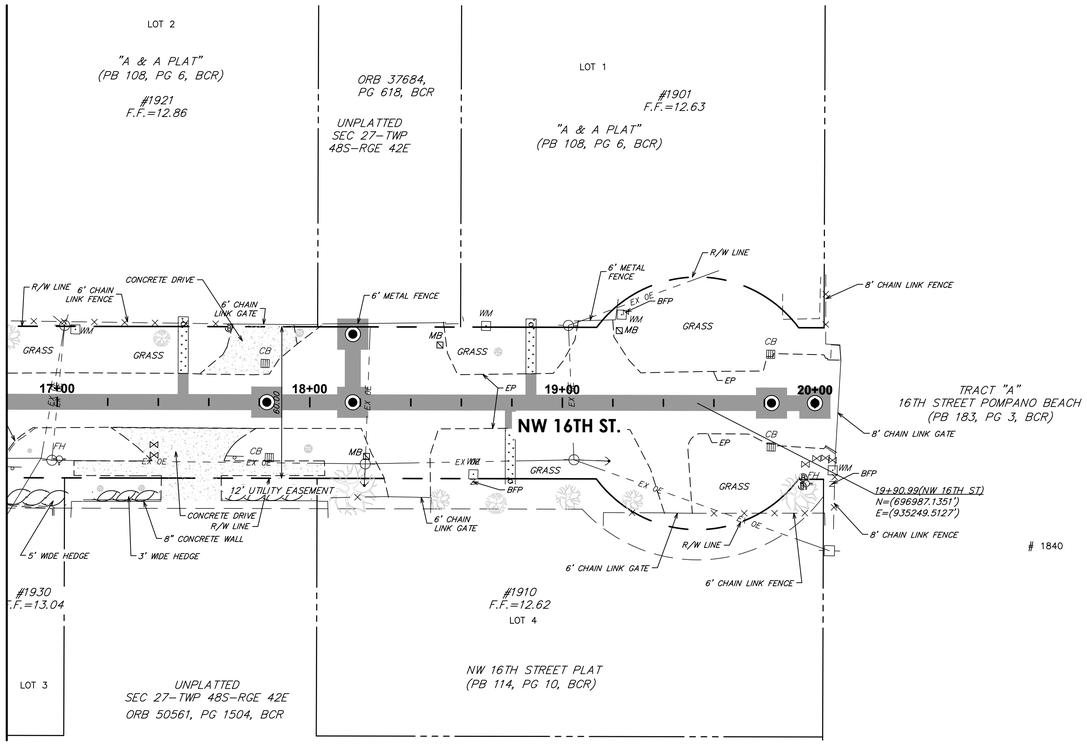

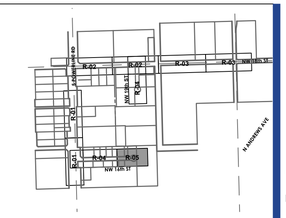

KEY MAP

N.T.S.

N

GRAPHIC SCALE

0 15 30 60

1 INCH = 30 FEET

LEGEND

- PROPOSED ASPHALT FULL DEPTH RESTORATION
- PROPOSED MILLING & RESURFACING
- PROPOSED SOD
- PROPOSED CONCRETE

VERTICAL DATUM INFORMATION
ALL ELEVATIONS SHOWN ARE IN NORTH AMERICAN VERTICAL DATUM OF 1988 (NAVD88)

Sunshine 811

Call 811 or visit sunshine811.com two full business days before digging to have buried facilities located and marked.

Check positive response codes before you dig!

BID SET

cma
chen moore and associates
500 West Cypress Creek Road
Suite 600
Ft. Lauderdale, FL 33309
954.730.0707
www.chenmoore.com

REGISTRATION
DAVID EDGARDO CASTRO FELIU, PE
LICENSE NO. 85558
DATE: 11/08/24

DAVID EDGARDO CASTRO FELIU LICENSE No. 85558 STATE OF FLORIDA PROFESSIONAL ENGINEER

THIS SEAL IS ONLY VALID ON PRINTED COPIES THAT ARE DATED WITH THE LICENSEE'S ORIGINAL HAND SIGNATURE. SCANNED OR ELECTRONIC COPIES ARE NOT CONSIDERED SIGNED AND SEALED.

CLIENT
pompano beach
Florida's Warmest Welcome
CITY OF POMPANO BEACH
100 WEST ATLANTIC BOULEVARD
POMPANO BEACH, FL 33060
Phone: 954.786.4600

PROJECT INFORMATION

NON SEWER AREA C SANITARY SEWER IMPROVEMENTS

POMPANO BEACH, FL

PROJECT NUMBER
23-0092.00085

CLIENT PROJECT NUMBER
P331425

VERIFY SCALES
0 1"
IF NOT ONE INCH ON THIS SHEET, ADJUST SCALES ACCORDINGLY

REVISIONS

DATE OF ISSUE
11/08/24

DESIGNED BY
DC

DRAWN BY
JT

CHECKED BY
DC

DRAWING TITLE

RESTORATION PLAN

DRAWING NUMBER
R-5
24 OF 43

Plot Date: 11/16/2024 12:36:38 AM Username: dcastro Layout Name: R-5
Folder Path: V:\Projects\2023\23-0092.00085 - area c sanitary sewer design services\Design\CAD\Sheets Filename: 23-0092.00085 Restoration.dwg

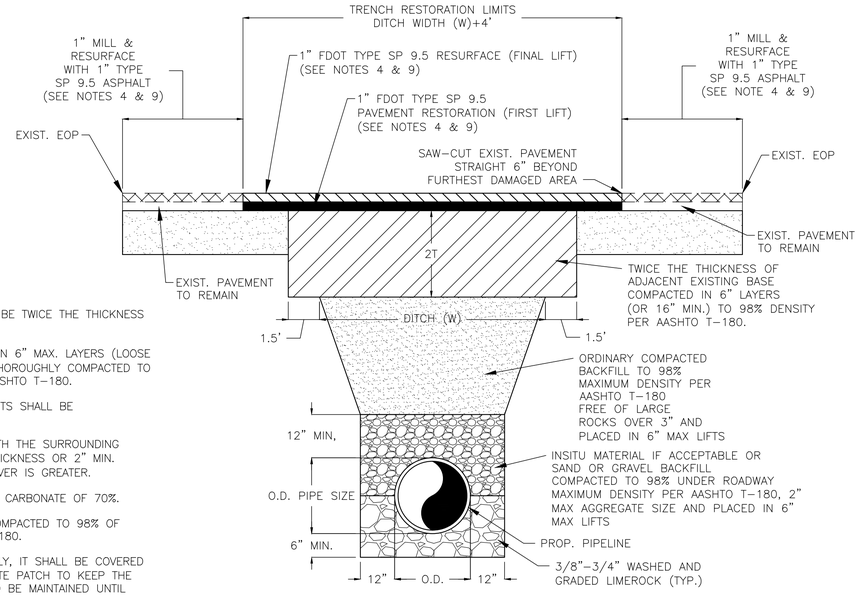

GENERAL NOTES:

1. BASE MATERIAL OVER DITCH SHALL BE TWICE THE THICKNESS OF THE ORIGINAL.
2. BASE MATERIAL SHALL BE PLACED IN 6" MAX. LAYERS (LOOSE MEASUREMENT) AND EACH LAYER THOROUGHLY COMPACTED TO 98% OF MAXIMUM DENSITY, PER AASHTO T-180.
3. ASPHALT CONCRETE PAVEMENT JOINTS SHALL BE MECHANICALLY SAWED.
4. ASPHALT SHALL BE CONSISTENT WITH THE SURROUNDING EXISTING ASPHALT BY TYPE AND THICKNESS OR 2" MIN. (2-1" LIFTS) FDOT SP 9.5 WHICHEVER IS GREATER.
5. BASE MATERIAL SHALL HAVE A MIN. CARBONATE OF 70%.
6. SUB GRADE MATERIAL SHALL BE COMPACTED TO 98% OF MAXIMUM DENSITY, PER AASHTO T-180.
7. IF THE DITCH IS FILLED TEMPORARILY, IT SHALL BE COVERED WITH A 1" THICK ASPHALT CONCRETE PATCH TO KEEP THE FILL MATERIAL FROM RAVELING, AND BE MAINTAINED UNTIL REPLACED WITH A PERMANENT PATCH.
8. COST OF ALL BACKFILL, BASE AND PAVEMENT RESTORATION TO BE INCLUDED IN THE LINEAR FOOT PRICE FOR PIPE BEING INSTALLED.
9. CONSTRUCTION IN CITY ROADS WILL REQUIRE FULL PAVEMENT RESTORATION PER THIS DETAIL UNLESS OTHERWISE INDICATED.

PAVEMENT RESTORATION & INSTALLATION DETAIL (CITY ROADS)

SCALE: N.T.S.

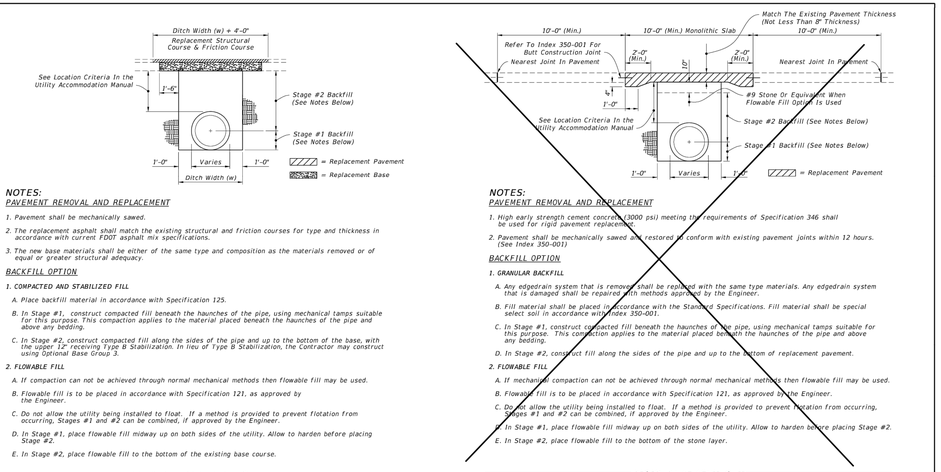

NOTES:

PAVEMENT REMOVAL AND REPLACEMENT

1. Pavement shall be mechanically sawed.
2. The replacement asphalt shall match the existing structural and friction courses for type and thickness in accordance with current FDOT asphalt mix specifications.
3. The new base materials shall be either of the same type and composition as the materials removed or of equal or greater structural adequacy.

BACKFILL OPTION

1. COMPACTED AND STABILIZED FILL
   A. Place backfill material in accordance with Specification 125.
   B. In Stage #1, construct compacted fill beneath the haunches of the pipe, using mechanical tamps suitable for this purpose. This compaction applies to the material placed beneath the haunches of the pipe and above any bedding.
   C. In Stage #2, construct compacted fill along the sides of the pipe and up to the bottom of the base, with the upper 12" receiving Type B Stabilization. In lieu of Type B Stabilization, the Contractor may construct using Optional Base Group 3.
2. FLOWABLE FILL
   A. If compaction can not be achieved through normal mechanical methods then flowable fill may be used.
   B. Flowable fill is to be placed in accordance with Specification 121, as approved by the Engineer.
   C. Do not allow the utility being installed to float. If a method is provided to prevent flotation from occurring, Stages #1 and #2 can be combined, if approved by the Engineer.
   D. In Stage #1, place flowable fill midway up on both sides of the utility. Allow to harden before placing Stage #2.
   E. In Stage #2, place flowable fill to the bottom of the existing base course.

FLEXIBLE PAVEMENT CUT

NOTES:

PAVEMENT REMOVAL AND REPLACEMENT

1. High early strength cement concrete (3000 psi) meeting the requirements of Specification 346 shall be used for rigid pavement replacement.
2. Pavement shall be mechanically sawed and restored to conform with existing pavement joints within 12 hours. (See Index 350-001)

BACKFILL OPTION

1. GRANULAR BACKFILL
   A. Any edgedrain system that is removed shall be replaced with the same type materials. Any edgedrain system that is damaged shall be repaired with methods approved by the Engineer.
   B. Fill material shall be placed in accordance with the Standard Specifications. Fill material shall be special select soil in accordance with Index 350-001.
   C. In Stage #1, construct compacted fill beneath the haunches of the pipe, using mechanical tamps suitable for this purpose. This compaction applies to the material placed beneath the haunches of the pipe and above any bedding.
   D. In Stage #2, construct fill along the sides of the pipe and up to the bottom of replacement pavement.
2. FLOWABLE FILL
   A. If mechanical compaction can not be achieved through normal mechanical methods then flowable fill may be used.
   B. Flowable fill is to be placed in accordance with Specification 121, as approved by the Engineer.
   C. Do not allow the utility being installed to float. If a method is provided to prevent flotation from occurring, Stages #1 and #2 can be combined, if approved by the Engineer.
   D. In Stage #1, place flowable fill midway up on both sides of the utility. Allow to harden before placing Stage #2.
   E. In Stage #2, place flowable fill to the bottom of the stone layer.

RIGID PAVEMENT CUT

GENERAL NOTES

1. The details provided in this Index apply to cases in which jack and bore or directional boring methods are not required by the Engineer.
2. Flowable fill shall not be placed directly over loose, or high plastic, or muck material (see Index 120-001) which will cause settlement due to fill weight. Where highly compressible material exists, the amount, shape and depth of flowable fill must be engineered to prevent pavement settlement.
3. These details do not apply to utility cuts longitudinal to the centerline of the roadway which may require the additional use of geotextiles, special bedding and backfill, or other special requirements.
4. Method of construction must be approved by the Engineer.
5. Some pipe may require special granular backfill up to 6" above top of pipe. Geotextiles may be required to encapsulate the special granular material.
6. Where asphalt concrete overlays exist over full slab concrete pavement, the replacement pavement shall have an overlay constructed over the replacement slab. The overlay shall match the existing asphalt pavement thickness. The replacement friction course shall match the existing friction course, except structural course may be used in lieu of dense graded friction course.
7. All shoulder pavement, curb, curb and gutter, and their substructure disturbed by utility trench cut construction shall be restored in kind.
8. The use of flowable fill to reduce the time traffic is taken off a facility is acceptable but must have prior approval by the Engineer. Flowable fill use is allowed only when properly engineered for pavement crossings, whether straight or diagonal, and shall not be installed for significant depths or lengths. The maximum length shall be fifty (50) feet and a maximum depth of six (6) feet unless supported by an engineering document prepared by a registered professional engineer that specializes in soils engineering. The engineering document shall address the evaluation of local groundwater flow interruption and settlement potential.
9. Excavatable flowable fill is to be used when the flowable fill option is selected.

TRENCH CUTS AND RESTORATIONS ACROSS ROADWAYS

LAST REVISION	REVISION	DESCRIPTION:	FDOT FY 2023-24 STANDARD PLANS	UTILITY ADJUSTMENTS THRU EXISTING PAVEMENT	INDEX	SHEET
11/01/17					125-001	1 of 2

10/4/2022 3:33:11 PM

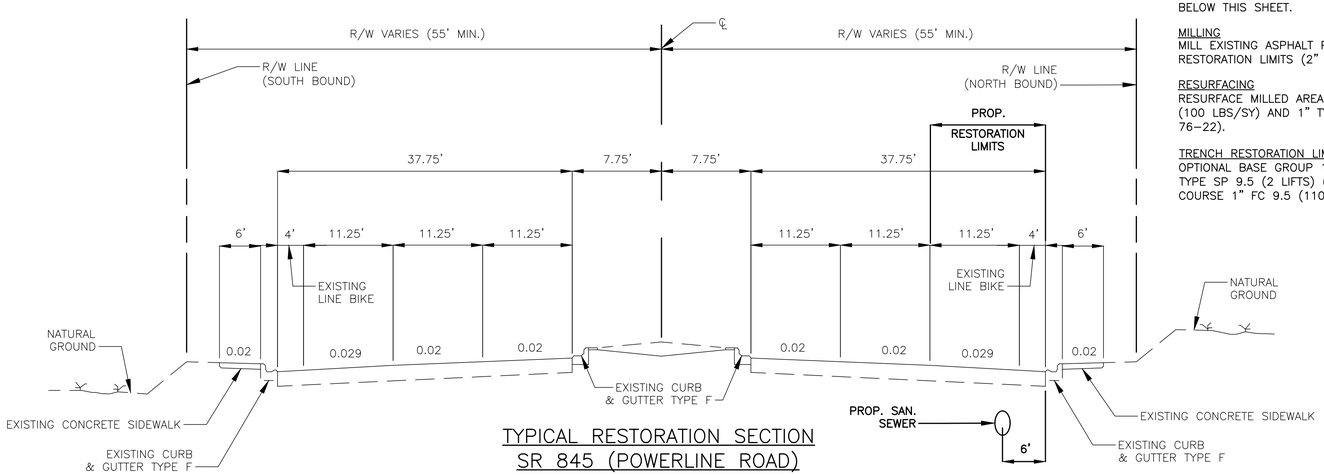

TYPICAL RESTORATION SECTION SR 845 (POWERLINE ROAD)

SCALE: N.T.S.

NOTES:

PROPOSED RESTORATION TO BE ACCORDANCE WITH FDOT STANDARDS NO. 125-001 (FLEXIBLE PAVEMENT CUT), SEE DETAILS BELOW THIS SHEET.

MILLING
MILL EXISTING ASPHALT PAVEMENT OUTSIDE OF THE TRENCH RESTORATION LIMITS (2" AVG DEPTH).

RESURFACING
RESURFACE MILLED AREAS WITH 1" TYPE SP 9.5 (TRAFFIC C) (100 LBS/SY) AND 1" TYPE FC-9.5 (110 LBS/SY) (RUBBER) (PG 76-22).

TRENCH RESTORATION LIMITS (NEW PAVEMENT OVER TRENCHES)
OPTIONAL BASE GROUP 12 (7.5" TYPE B-12.5 ONLY) WITH 2" TYPE SP 9.5 (2 LIFTS) (TRAFFIC C) (200 LBS/SY) AND FRICTION COURSE 1" FC 9.5 (110 LBS/SY) (RUBBER) (PG 76-22).

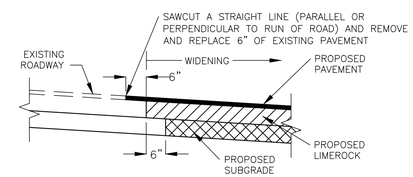

SAWCUT DETAIL

SCALE: N.T.S.

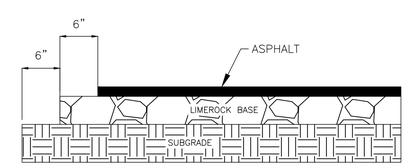

PAVEMENT EDGE DETAIL

SCALE: N.T.S.

VERTICAL DATUM INFORMATION
ALL ELEVATIONS SHOWN ARE IN NORTH AMERICAN VERTICAL DATUM OF 1988 (NAVD88)

Sunshine 811
Call 811 or visit sunshine811.com two full business days before digging to have buried facilities located and marked.
Check positive response codes before you dig!

BID SET

cma
chen moore and associates
500 West Cypress Creek Road
Suite 600
Ft. Lauderdale, FL 33309
954.730.0707
www.chenmoore.com

REGISTRATION
DAVID EDGARDO CASTRO FELIU, PE
LICENSE NO. 85558
DATE: 11/08/24

DAVID EDGARDO CASTRO FELIU LICENSE No. 85558 STATE OF FLORIDA PROFESSIONAL ENGINEER

THIS SEAL IS ONLY VALID ON PRINTED COPIES THAT ARE DATED WITH THE LICENSEE'S ORIGINAL HAND SIGNATURE. SCANNED OR ELECTRONIC COPIES ARE NOT CONSIDERED SIGNED AND SEALED.

CLIENT
pompano beach
Florida's Warmest Welcome
CITY OF POMPANO BEACH
100 WEST ATLANTIC BOULEVARD
POMPANO BEACH, FL 33060
Phone: 954.786.4600

PROJECT INFORMATION

NON SEWER AREA C SANITARY SEWER IMPROVEMENTS

POMPANO BEACH, FL

PROJECT NUMBER
23-0092.00085

CLIENT PROJECT NUMBER
P331425

VERIFY SCALES
0 — 1"
IF NOT ONE INCH ON THIS SHEET, ADJUST SCALES ACCORDINGLY

REVISIONS

DATE OF ISSUE
11/08/24

DESIGNED BY
DC

DRAWN BY
JT

CHECKED BY
DC

DRAWING TITLE
DETAILS

DRAWING NUMBER
D-1
25 OF 43

Plot Date: 11/16/2024 12:17:08 AM Username: jspicer Layout Name: D-1
Folder Path: V:\Projects\2023\23-0092.00085 - area c sanitary sewer design services\Design\CAD\Sheets Filename: 23-0092.00085 Details.dwg

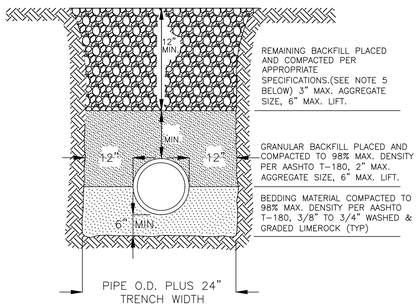

NOTES:

1. CONTRACTOR TO PROVIDE SAFE TRENCH SLOPES PER OSHA REQUIREMENTS. WHERE SOIL CONDITIONS CAN NOT BE MAINTAINED, CONTRACTOR IS TO PROVIDE APPROVED MEANS OF CONSTRUCTION.
2. UNSUITABLE IN-SITU MATERIALS SUCH AS MUCK, DEBRIS AND LARGE ROCKS SHALL BE REMOVED; BEDDING MATERIAL AND BACKFILL SHALL CONSIST OF WASHED AND GRADED LIMEROCK.
3. THE PIPE AND/OR STRUCTURE SHALL BE FULLY SUPPORTED FOR ITS ENTIRE LENGTH WITH APPROPRIATE COMPACTION UNDER THE PIPE HAUNCHES.
4. BACKFILL SHALL BE FREE OF UNSUITABLE MATERIAL SUCH AS LARGE ROCK, MUCK, AND DEBRIS.
5. COMPACT BACKFILL TO 98% DENSITY UNDER PAVEMENT AND TO 95% DENSITY ELSEWHERE (AASHTO T-180)
6. COMPACTION AND DENSITY TESTS SHALL BE COMPLETED DURING BACKFILL OPERATIONS, CONTRACTORS NOT FOLLOWING THIS PROCEDURE, FOR WHATEVER REASONS, SHALL BE REQUIRED TO RE-EXCAVATE THE AREA IN QUESTION, DOWN TO THE BEDDING MATERIAL, THEN BACKFILL FOLLOWING THE ABOVE PROCEDURES.
7. SHEETING WILL BE REQUIRED AS DETERMINED IN THE FIELD.
8. MECHANICAL COMPACTION NOT ALLOWED BELOW THIS LEVEL (WITHIN 12" OF TOP PIPE).
9. WHERE UNSUITABLE SOILS ARE ENCOUNTERED AT THE PIPE INVERT, THE BEDDING MATERIAL IS TO BE EXTENDED TO A MIN. OF 16" BELOW THE INVERT ELEVATION AND NON-WOVEN FILTER FABRIC TO BE LAID BETWEEN UNSUITABLE SOILS & BASE. FILTER FABRIC TO EXTEND MIN. 12" ABOVE TOP OF PIPE.

TYPICAL TRENCH DETAIL

SCALE: N.T.S.

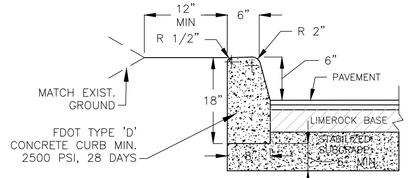

TYPE 'D' CURB

SCALE: N.T.S.

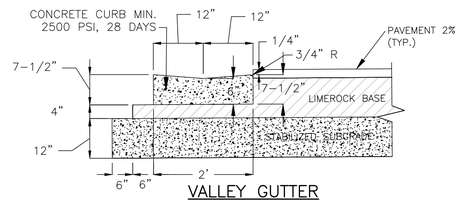

VALLEY GUTTER

SCALE: N.T.S.

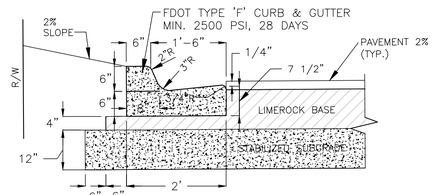

TYPE 'F' CURB

SCALE: N.T.S.

NOTES:

1. ALL PROPOSED WORK OR RESTORATION WORK REQUIRED WITHIN FDOT RIGHT-OF-WAY IS TO FOLLOW FDOT SPECIFICATIONS AND STANDARDS.
2. REFER TO FDOT STANDARDS INDEX 520-001 FOR RESTORATION OF CURB OR NEW CURB PROPOSED WITHIN FDOT RIGHT-OF-WAY, NAMELY POWERLINE ROAD.

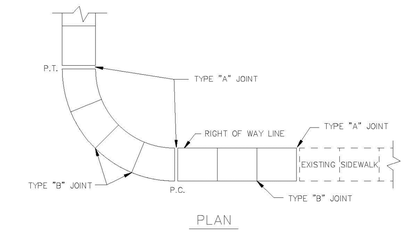

PLAN

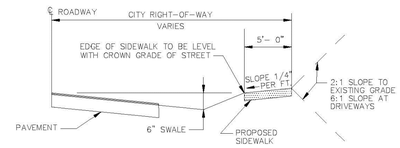

TYPICAL SIDEWALK SECTION

SIDEWALK DETAILS

ENGINEERING STANDARDS 2022

REVISIONS BY	DATE	ENGINEERING DIVISION CITY OF POMPANO BEACH	SIDEWALK DETAILS	
		SCALE: N.T.S.		DATE: JUNE 2022 DWG. NO. 301-1

TABLE OF SIDEWALK JOINTS	
TYPE	LOCATION
"A"	JOINT SHALL BE PLACED AT P.C. AND P.T. OF CURVES, JUNCTION OF EXISTING SIDEWALKS, EVERY 60' ON NEW SIDEWALKS AND WHERE SIDEWALK'S ABUT CONCRETE CURBS, DRIVEWAY'S AND SIMILAR STRUCTURES.
"B"	JOINT SHALL BE PLACED 5'-0" CENTER
"C"	JOINT SHALL BE PLACED AT 20' INTERVALS

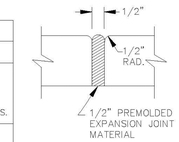

TYPE "A" JOINT

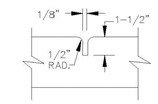

TYPE "B" JOINT

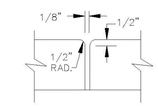

TYPE "C" JOINT

NOTE: SIDEWALK SHALL BE 4" THICK EXCEPT IN DRIVEWAYS WHERE THE THICKNESS SHALL BE 6".

SIDEWALK DETAILS

ENGINEERING STANDARDS 2022

REVISIONS BY	DATE	ENGINEERING DIVISION CITY OF POMPANO BEACH	SIDEWALK DETAILS	
		SCALE: N.T.S.		DATE: JUNE 2022 DWG. NO. 301-2

cma chen moore and associates
500 West Cypress Creek Road, Suite 600
Ft. Lauderdale, FL 33309
954.730.0707
www.chenmoore.com

CITY OF POMPANO BEACH | DETAIL

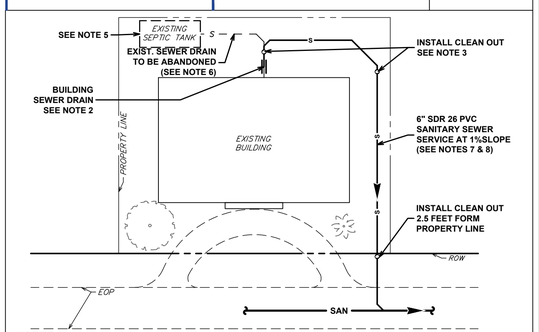

NOTES:

1. THIS DETAIL IS A SCHEMATIC REPRESENTATION FOR SEPTIC TANK SEWER CONVERSION ON PRIVATE PROPERTY. EACH CONVERSION SITE SHALL BE EVALUATED PRIOR TO CONSTRUCTION BY THE OWNER, THE CONTRACTOR, THE CITY AND THE ENGINEER. THE CONTRACTOR IS RESPONSIBLE TO DEVELOP A SITE SPECIFIC PLAN FOR EACH PROPERTY INCLUDING THE SEWER SERVICE PIPE ROUTE, THE ABANDONMENT OF EXISTING SEPTIC TANK, THE CONNECTION TO THE BUILDING SEWER DRAIN, AND THE RESTORATION OF ALL SURFACE AREAS, FENCES AND OTHER MATERIALS IMPACTED BY CONSTRUCTION, TO BE APPROVED BY THE CITY AND THE ENGINEER.
2. SEWER SERVICE SHALL BE INSTALLED AT A MINIMUM DEPTH OF 12 INCHES AT THE CONNECTION TO THE BUILDING SEWER DRAIN. IF BUILDING DRAIN DOES NOT HAVE 12" OF COVER, USE 45° FITTINGS TO ACHIEVE MINIMUM DEPTH.
3. INSTALL TWO WAY CLEAN OUT AT THE JUNCTURE OF THE BUILDING DRAIN AND BUILDING SEWER +/- 30 INCHES BEYOND THE BUILDING EXTERIOR WALL. INSTALL CLEAN OUTS AT EACH CHANGE OF DIRECTION THAT IS MORE THAN 45° AND EVERY 100 FEET.
4. CONTRACTOR SHALL AVOID DAMAGE TO HARD SURFACES AND STRUCTURES WHEN POSSIBLE.
5. EXISTING SEPTIC TANK IS TO BE PUMPED AND ABANDONED. AFTER THE SEPTIC TANK IS PUMPED OUT, THE BOTTOM IS TO BE PUNCTURED AND THE HOLE MUST BE VISIBLE FOR INSPECTION. SEPTIC TANK IS TO BE FILLED TO THE TOP WITH SAND OR SUITABLE CLEAN FILL.
6. EXISTING SANITARY SEWER LINE CONNECTING BUILDING SEWER DRAIN TO SEPTIC TANK SHALL BE ABANDONED IN PLACE, FILLED WITH FLOWABLE FILL AND CAPPED. THE CONTRACTOR MUST START FILLING AT THE HIGHEST POINT AND CONFIRM THE FLOWABLE FILL COMPLETELY FILLS EACH LATERAL AS INDICATED BY THE CLEAN OUT LOCATIONS. CONTRACTOR SHALL BE AWARE THAT ANY UNKNOWN OR UNPERMITTED CONNECTIONS WILL BE FILLED AS WELL.

(CONTINUES ON DETAIL C-2)

DATE OF ISSUE	PROJECT TITLE	DRAWING NUMBER
6/1/2024	PRIVATE PROPERTY SEPTIC TANK TO SEWER CONVERSION	C-1

cma chen moore and associates
500 West Cypress Creek Road, Suite 600
Ft. Lauderdale, FL 33309
954.730.0707
www.chenmoore.com

CITY OF POMPANO BEACH | DETAIL

NOTES (CONTINUES):

7. SEWER SERVICE PIPE SHALL BE BEDDED IN CLEAN FILL, NO STONES LARGER THAN 1/2 INCH AND SUPPORTED THE ENTIRE LENGTH.
8. SEWER SERVICE TO BE BACKFILLED AND COMPACTED IN 6 INCH LAYERS. THE BACKFILL UNDER AND BESIDE THE PIPE SHALL BE COMPACTED FOR PIPE SUPPORT. BACKFILL SHALL BE BOUGHT UP EVENLY ON BOTH SIDES OF THE PIPE SO THAT THE PIPE REMAINS ALIGNED. IN INSTANCES WHERE THE MATERIALS MANUFACTURE'S INSTALLATION INSTRUCTIONS ARE MORE RESTRICTIVE THAN THOSE PRESCRIBED BY THE CODE. THE MATERIAL SHALL BE INSTALLED IN ACCORDANCE WITH THE MORE RESTRICTIVE REQUIREMENTS.
9. A PLUMBING PERMIT WILL BE REQUIRED PRIOR TO ANY WORK ON PRIVATE PROPERTY. ALL WORK SHALL BE IN ACCORDANCE WITH PERMIT REQUIREMENTS AND FLORIDA BUILDING CODE (LATEST EDITION).
10. TRENCH SHALL BE KEPT OPEN FOR INSPECTION AT INTERMITTENT SPOTS ALONG THE PATH, AND AT CONNECTION TO THE EXISTING PRIVATE SIDE SERVICE. CONTRACTOR IS TO ENSURE THAT TRENCH IS PROTECTED WHILE LEFT OPEN.

DATE OF ISSUE	PROJECT TITLE	DRAWING NUMBER
6/1/2024	PRIVATE PROPERTY SEPTIC TANK TO SEWER CONVERSION	C-2

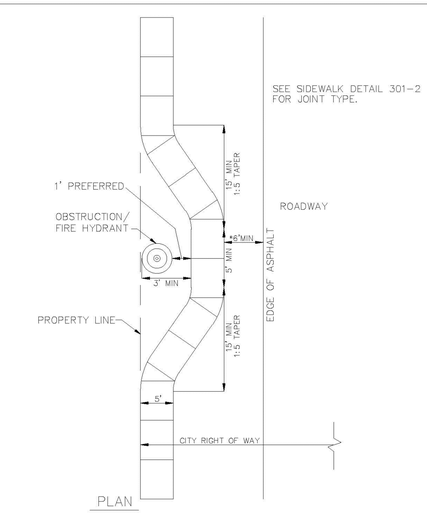

PLAN

SIDEWALK OBSTRUCTION

* IF 6' DISTANCE CANNOT BE OBTAINED PROVIDE CURBING.

ENGINEERING STANDARDS 2022

REVISIONS BY	DATE	ENGINEERING DIVISION CITY OF POMPANO BEACH	SIDEWALK OBSTRUCTION	
T.W.	1-2008	SCALE: N.T.S.		DATE: JUNE 2022 DWG. NO. 301-3

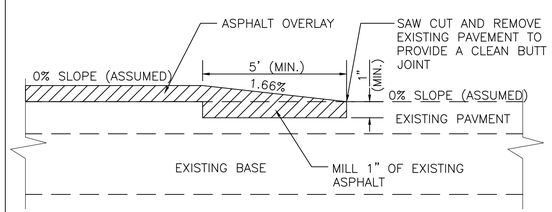

LONGITUDINAL FEATHERING DETAIL

SCALE: N.T.S.

VERTICAL DATUM INFORMATION
ALL ELEVATIONS SHOWN ARE IN NORTH AMERICAN VERTICAL DATUM OF 1988 (NAVD88)

Sunshine 811
Call 811 or visit sunshine811.com two full business days before digging to have buried facilities located and marked.
Check positive response codes before you dig!

BID SET

cma chen moore and associates
500 West Cypress Creek Road
Suite 600
Ft. Lauderdale, FL 33309
954.730.0707
www.chenmoore.com

REGISTRATION
DAVID EDGARDO CASTRO FELIU, PE
LICENSE NO. 85558
DATE: 11/08/24

DAVID EDGARDO CASTRO FELIU LICENSE No. 85558 STATE OF FLORIDA PROFESSIONAL ENGINEER

THIS SEAL IS ONLY VALID ON PRINTED COPIES THAT ARE DATED WITH THE LICENSEE'S ORIGINAL HAND SIGNATURE. SCANNED OR ELECTRONIC COPIES ARE NOT CONSIDERED SIGNED AND SEALED.

CLIENT
pompano beach
Florida's Warmest Welcome
CITY OF POMPANO BEACH
100 WEST ATLANTIC BOULEVARD
POMPANO BEACH, FL 33060
Phone: 954.786.4600

PROJECT INFORMATION

NON SEWER AREA C SANITARY SEWER IMPROVEMENTS

POMPANO BEACH, FL

PROJECT NUMBER 23-0092.00085

CLIENT PROJECT NUMBER P331425

VERIFY SCALES 0 — 1"
IF NOT ONE INCH ON THIS SHEET, ADJUST SCALES ACCORDINGLY

REVISIONS

DATE OF ISSUE 11/08/24

DESIGNED BY DC

DRAWN BY JT

CHECKED BY DC

DRAWING TITLE

DETAILS

DRAWING NUMBER

D-2

Plot Date: 11/16/2024 12:17:14 AM Username: jspicer Layout Name: D-2
Folder Path: V:\Projects\2023\23-0092.00085 - area c sanitary sewer design services\Design\CAD\Sheets Filename: 23-0092.00085 Details.dwg

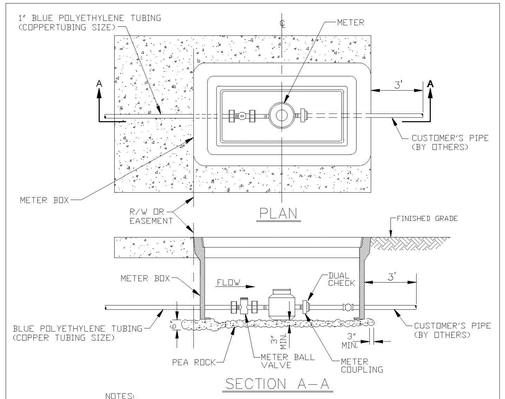

NOTES:

1. ALL METERS WILL BE SUPPLIED AND INSTALLED BY COPB UTILITIES METER HAS IRON PIPE THREAD MALE CONNECTION ON EACH END.
2. METER SHALL BE CENTERED IN BOX.
3. DUAL CHECK IS SAME SIZE AS CUSTOMER'S SERVICE LINE.

METER SIZE	LAYING LENGTH (IN)	HEIGHT (IN)
⅝"	7.5	4.56
1"	10.75	5.75

METER BOX INSTALLATION

ENGINEERING STANDARDS 2022

REVISIONS BY	DATE	ENGINEERING DIVISION CITY OF POMPANO BEACH	METER BOX INSTALLATION FOR 5/8" AND 1" METERS
S.S.	11–2012		DATE: JAN. 2022
		SCALE: N.T.S.	DWG. NO. 105–2

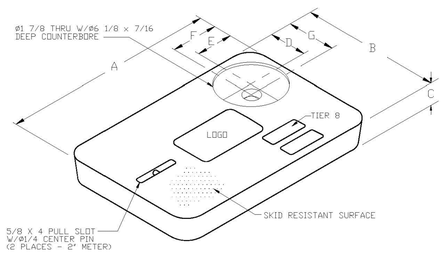

METER BOX COVER DIMENSIONS (IN)							
METER SIZE	A	B	C	D	E	F	G
1"	18 1/8"	11 1/4"	1 3/4"	3 3/4"	4"	4 9/16"	4 5/16"
1 1/2"	23 1/4"	13 3/4"	2"	4"	4"	4 9/16"	4 9/16"
2"	30 1/2"	17 1/2"	2"	4"	4"	4 9/16"	4 9/16"

NOTES

1. CUSTOMER IS CITY OF POMPANO BEACH FLORIDA LOGO TO BE SPECIFIED CITY OF POMPANO BEACH POTABLE WATER
2. FITS NEPTUNE R450 ANTENNA
3. THIS COVER IS RATED FOR A STATIC DESIGN LOAD OF 8,000 LBS. (35,548 N) OVER A 10 (254) X 10 (254) AREA AND MUST PASS A MINIMUM STATIC TEST LOAD OF 12,000 LBS (53,376 N).
4. METER BOX COVER SHOULD BE RATED FOR TRAFFIC CONDITION AS DETERMINED BE ENGINEER OF RECORD.

POTABLE WATER METER BOX COVER

ENGINEERING STANDARDS 2022

REVISIONS BY	DATE	ENGINEERING DIVISION CITY OF POMPANO BEACH	TYPICAL METER BOX COVER
S.S.	11–2012		DATE: JAN. 2022
		SCALE: N.T.S.	DWG. NO. 105–3

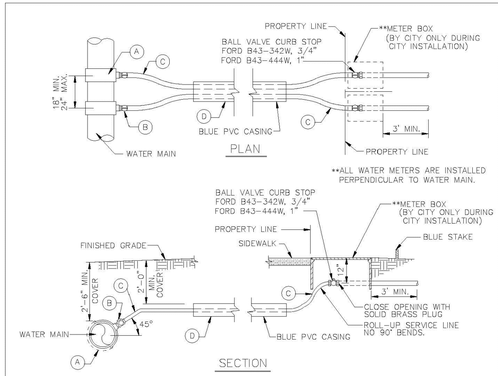

SINGLE SERVICE

- (A) 1" TAPPING SADDLE CC THREAD FORD
- (B) 1" CORPORATION STOP FORD TYPE F1000–4 NL THREADS
- (C) 1" POLYETHYLENE SOLID BLUE CTS SDR 18 (200 PSI)
- (D) 1 1/2" SCH. 40 FOR 1" SERVICE 2 1/2" SCH. 40 FOR 2" SERVICE PAINTED BLUE

DOUBLE SERVICE

- (A) 1" TAPPING SADDLE (2) FORD FC–202 OR EQUAL.
- (B) 1" CORPORATION STOP (2) FORD TYPE F1000
- (C) 1" POLYETHYLENE SOLID BLUE C.T.S. (2)
- (D) 2 1/2" SCH. 40 FOR 1" SERVICE 6" SCH. 40 FOR 2" SERVICE PAINTED BLUE

TYPICAL 3/4" AND 1" WATER SERVICE

ENGINEERING STANDARDS 2022

REVISIONS BY	DATE	ENGINEERING DIVISION CITY OF POMPANO BEACH	TYPICAL 1" WATER SERVICE
T.W.	11–2007		DATE: MAY 2022
S.S.	05–2012		DWG. NO.
S.S.	11–2015	SCALE: N.T.S.	107–1
A.S.	08–2021		

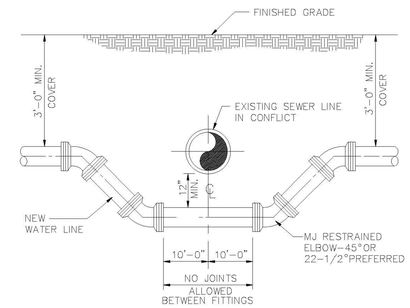

NOTES

WHERE CONDITIONS PERMIT, PIPE DEFLECTION MAY BE USED INSTEAD OF BENDS TO OBTAIN THE MINIMUM CLEARANCE. FACTORY OFFSETS MAY BE USED.

TYPICAL CONFLICT DETAIL

USE MEGALUGS AT ALL PIPE JOINTS

ALL D.I.P. TO BE PAINTED BLUE ON TOP HALF OF PIPE.

ENGINEERING STANDARDS 2022

REVISIONS BY	DATE	ENGINEERING DIVISION CITY OF POMPANO BEACH	TYPICAL CONFLICT (WATER)
S.S.	04–2005		DATE: MAY 2022
S.S.	01–2012		DWG. NO.
		SCALE: N.T.S.	108–1

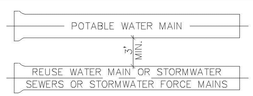

A MINIMUM HORIZONTAL SEPARATION 3' (OUTSIDE TO OUTSIDE), SHALL BE MAINTAINED BETWEEN POTABLE WATER MAINS AND STORMWATER SEWERS, STORMWATER FORCE MAINS AND REGULATED REUSE WATER MAINS.

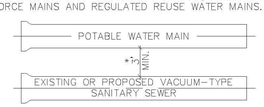

A MINIMUM HORIZONTAL SEPARATION 3' (OUTSIDE TO OUTSIDE), SHALL BE MAINTAINED BETWEEN EXISTING OR PROPOSED VACUUM–TYPE SANITARY SEWER. * SEE NOTE D(1)(B).

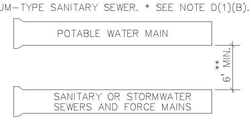

A MINIMUM HORIZONTAL SEPARATION OF 6' (OUTSIDE TO OUTSIDE), SHALL BE MAINTAINED BETWEEN POTABLE WATER MAINS AND EXISTING OR PROPOSED GRAVITY–OR PRESSURE TYPE SANITARY SEWER, WASTEWATER FORCE MAIN OR NOT REGULATED REUSE WATER MAIN. ** SEE NOTE D(1)(C).

MINIMUM HORIZONTAL SEPARATION REQUIREMENTS FOR POTABLE WATER, REUSE, STORMWATER AND SEWER LINES

ENGINEERING STANDARDS 2022

REVISIONS BY	DATE	ENGINEERING DIVISION CITY OF POMPANO BEACH	MIN. HORIZONTAL SEPARATION FOR POTABLE WATER
S.S.	01/12		DATE: JAN. 2022
		SCALE: N.T.S.	DWG. NO. 121–1

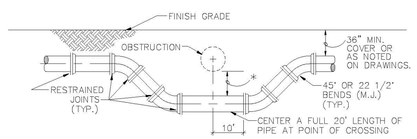

SPECIAL UTILITY CROSSING – FITTING TYPE

* 12" MINIMUM CLEARANCE REQUIRED FOR PRESSURE TYPE SANITARY SEWER, WASTEWATER OR STORMWATER FORCE MAIN OR REUSE WATER MAIN CROSSINGS. IF MINIMUM CLEARANCE CANNOT BE OBTAINED. REFER TO "PROTECTION OF POTABLE WATER SUPPLY" FOR WATER MAIN CROSSINGS. SEE NOTE 2(B), ON STANDARD NO. 122–3

6" MINIMUM CLEARANCE REQUIRED FOR WATER AND STORMWATER, SEWER MAIN CROSSINGS. SEE NOTE 2(A), ON STANDARD NO. 122–3.

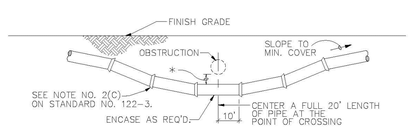

STANDARD UTILITY CROSSING – DEFLECTION TYPE

NOTES:

1. THE DEFLECTION TYPE CROSSING SHALL BE USED WHEREVER POSSIBLE. ONLY UNDER SPECIFIC ORDERS BY THE ENGINEER SHALL THE FITTING TYPE CROSSING BE ALLOWED.
2. CONSTRUCT STANDARD CROSSING USING NO MORE THAN 75% OF MANUFACTURERS' MAXIMUM JOINT DEFLECTION.
3. FOR POTABLE WATER MAINS, REFER TO "PROTECTION OF POTABLE WATER SUPPLY".

UTILITY CROSSINGS

ENGINEERING STANDARDS 2022

REVISIONS BY	DATE	ENGINEERING DIVISION CITY OF POMPANO BEACH	UTILITY CROSSINGS
S.S.	01/12		DATE: JAN. 2022
		SCALE: N.T.S.	DWG. NO. 122–1

PROTECTION OF POTABLE WATER SUPPLY NOTES

A. GENERAL

IN ADDITION TO THESE REQUIREMENTS, ALL POTABLE WATER MAINS CONSTRUCTED IN THE VICINITY OF STORM SEWERS, SANITARY SEWERS OR FORCE MAINS SHALL COMPLY WITH THE APPLICABLE PROVISIONS OF FLORIDA ADMINISTRATIVE CODE CHAPTER 62–555, GREAT LAKES–UPPER MISSISSIPPI RIVER BOARD OF STATE SANITARY ENGINEERS (GLUMRB) "RECOMMENDED STANDARDS FOR WATER WORKS", AND GLUMRB "RECOMMENDED STANDARDS FOR WASTEWATER FACILITIES".

B. DEFINITIONS

FOR THE PURPOSES OF THIS SPECIFICATION, THE WORDS "OTHER PIPE" OR "OTHER PIPES" SHALL MEAN SANITARY SEWER MAIN, SEWAGE FORCE MAIN, STORMWATER MAIN OR ANY COMBINATION THEREOF.

C. CROSS CONNECTIONS PROHIBITED

THERE SHALL BE NO PHYSICAL CONNECTIONS BETWEEN A PUBLIC OR PRIVATE POTABLE WATER SUPPLY SYSTEM AND ANY OTHER PIPE OR APPURTENANCE THERETO WHICH WOULD PERMIT THE PASSAGE OF ANY WASTEWATER, POLLUTED WATER, OR ANY OTHER WATER INTO THE POTABLE SUPPLY. NO WATER PIPE SHALL PASS THROUGH OR COME INTO CONTACT WITH ANY PART OF A SANITARY SEWER MANHOLE OR STORMWATER MANHOLE.

D. RELATION OF OTHER PIPES TO POTABLE WATER MAINS

1. HORIZONTAL SEPARATION

A. NEW OR RELOCATED, UNDERGROUND WATER MAINS SHALL BE LAID TO PROVIDE A HORIZONTAL DISTANCE OF AT LEAST THREE FEET BETWEEN THE OUTSIDE OF THE WATER MAIN AND THE OUTSIDE OF ANY EXISTING OR PROPOSED STORM WATER, STORM WATER FORCE MAIN, OR PIPELINE CONVEYING REUSE WATER NOT REGULATED UNDER PART III OF CHAPTER 62–610,F.A.C.

B. NEW OR RELOCATED, UNDERGROUND WATER MAINS SHALL BE LAID TO PROVIDE A HORIZONTAL DISTANCE OF AT LEAST THREE FEET, AND PREFERABLY TEN FEET, BETWEEN THE OUTSIDE OF THE WATER MAIN AND THE OUTSIDE OF ANY EXISTING OR PROPOSED VACUUM–TYPE SANITARY SEWER.

C. NEW OR RELOCATED, UNDERGROUND WATER MAINS SHALL BE LAID TO PROVIDE A HORIZONTAL DISTANCE OF AT LEAST SIX FEET, AND PREFERABLY TEN FEET, BETWEEN THE OUTSIDE OF THE WATER MAIN AND THE OUTSIDE OF ANY EXISTING OR PROPOSED GRAVITY–OR PRESSURE–TYPE SANITARY SEWER, WASTEWATER FORCE MAIN, OR PIPELINE CONVEYING REUSE WATER NOT REGULATED UNDER CHAPTER 62–610, F.A.C. THE MINIMUM HORIZONTAL SEPARATION DISTANCE BETWEEN WATER MAINS AND GRAVITY TYPE SEWERS SHALL BE REDUCED TO THREE FEET WHERE THE BOTTOM OF THE WATER IS LAID AT LEAST SIX INCHES ABOVE THE TOP OF THE SEWER.

ENGINEERING STANDARDS 2022

REVISIONS BY	DATE	ENGINEERING DIVISION CITY OF POMPANO BEACH	POTABLE WATER SUPPLY NOTES
S.S.	01/12		DATE: JAN. 2022
		SCALE: N.T.S.	DWG. NO. 122–2

VERTICAL DATUM INFORMATION
ALL ELEVATIONS SHOWN ARE IN NORTH AMERICAN VERTICAL DATUM OF 1988 (NAVD88)

Sunshine 811
Call 811 or visit sunshine811.com two full business days before digging to have buried facilities located and marked.
Check positive response codes before you dig!

BID SET

cma
chen moore and associates
500 West Cypress Creek Road
Suite 600
Ft. Lauderdale, FL 33309
954.730.0707
www.chenmoore.com

REGISTRATION
DAVID EDGARDO CASTRO FELIU, PE
LICENSE NO. 85558
DATE: 11/08/24

DAVID EDGARDO CASTRO FELIU LICENSE No. 85558 STATE OF FLORIDA PROFESSIONAL ENGINEER

THIS SEAL IS ONLY VALID ON PRINTED COPIES THAT ARE DATED WITH THE LICENSEE'S ORIGINAL HAND SIGNATURE. SCANNED OR ELECTRONIC COPIES ARE NOT CONSIDERED SIGNED AND SEALED.

CLIENT
pompano beach
Florida's Warmest Welcome
CITY OF POMPANO BEACH
100 WEST ATLANTIC BOULEVARD
POMPANO BEACH, FL 33060
Phone: 954.786.4600

PROJECT INFORMATION

NON SEWER AREA C SANITARY SEWER IMPROVEMENTS

POMPANO BEACH, FL

PROJECT NUMBER
23-0092.00085

CLIENT PROJECT NUMBER
P331425

VERIFY SCALES
0 — 1"
IF NOT ONE INCH ON THIS SHEET, ADJUST SCALES ACCORDINGLY

REVISIONS

DATE OF ISSUE
11/08/24

DESIGNED BY
DC

DRAWN BY
JT

CHECKED BY
DC

DRAWING TITLE
DETAILS

DRAWING NUMBER
D-3
27 OF 43

Plot Date: 11/16/2024 12:17:22 AM Username: jspicer Layout Name: D-3
Folder Path: V:\Projects\2023\23-0092.00085 - area c sanitary sewer design services\Design\CAD\Sheets Filename: 23-0092.00085 Details.dwg

D. NEW OR RELOCATED, UNDERGROUND WATER MAINS SHALL BE LAID TO PROVIDE A HORIZONTAL DISTANCE OF AT LEAST TEN FEET BETWEEN THE OUTSIDE OF THE WATER MAIN AND ALL PARTS OF ANY EXISTING OR PROPOSED "ON-SITE SEWAGE TREATMENT AND DISPOSAL SYSTEM".

2. VERTICAL SEPARATION

A. NEW OR RELOCATED, UNDERGROUND WATER MAINS CROSSING ANY EXISTING OR PROPOSED GRAVITY-OR VACUUM-TYPE SANITARY SEWER OR STORM SEWER SHALL BE LAID SO THE OUTSIDE OF THE WATER MAIN IS AT LEAST SIX INCHES, AND PREFERABLY 12 INCHES, ABOVE OR AT LEAST 12 INCHES BELOW THE OUTSIDE OF THE OTHER PIPELINE. HOWEVER, IT IS PREFERABLE TO LAY THE WATER MAIN ABOVE THE OTHER PIPELINE.

B. NEW OR RELOCATED, UNDERGROUND WATER MAINS CROSSING ANY EXISTING OR PROPOSED PRESSURE-TYPE SANITARY SEWER, WASTEWATER OR STORM WATER FORCE MAIN, OR PIPELINE CONVEYING REUSE WATER SHALL BE LAID SO THE OUTSIDE OF THE WATER MAIN IS AT LEAST 12 INCHES, ABOVE OR BELOW THE OUTSIDE THE OTHER PIPELINE. HOWEVER, IT IS PREFERABLE TO LAY THE WATER MAIN ABOVE THE OTHER PIPELINE.

C. AT THE UTILITY CROSSINGS DESCRIBED IN PARAGRAPHS (A) AND (B) ABOVE, ONE FULL LENGTH OF WATER MAIN PIPE SHALL BE CENTERED ABOVE OR BELOW THE OTHER PIPELINE SO THE WATER MAIN JOINTS WILL BE AS FAR AS POSSIBLE FROM THE OTHER PIPELINE. ALTERNATIVELY, AT SUCH CROSSINGS, THE PIPES SHALL BE ARRANGED SO THAT ALL WATER MAIN JOINTS ARE AT LEAST THREE FEET FROM ALL JOINTS IN VACUUM-TYPE SANITARY SEWERS, STORM SEWERS, STORM WATER FORCE MAINS, OR PIPELINES CONVEYING REUSE WATER REGULATED UNDER PART III OF CHAPTER 62-610, F.A.C. AND AT LEAST SIX FEET FROM ALL JOINTS IN GRAVITY- OR PRESSURE-TYPE SANITARY SEWERS, WASTEWATER FORCE MAINS, OR PIPELINES CONVEYING REUSE WATER NOT REGULATED UNDER PART III OR CHAPTER 62-610, F.A.C.

WHERE THE HORIZONTAL CAN BEING LOCATED LESS THAN THE REQUIRED MINIMUM DISTANCES FROM JOINTS IN THE OTHER PIPELINE OR THE HORIZONTAL IS LESS THAN THREE FEET FROM ANOTHER PIPELINE OR THE UNDER GROUND WATER MAIN IS CROSSING ANOTHER PIPELINE AND IS LESS THAN THE REQUIRED MINIMUM VERTICAL DISTANCE FROM THE OTHER PIPELINE, THE CONTRACTOR SHALL CONTACT THE ENGINEER IMMEDIATELY FOR RECOMMENDED SOLUTIONS TO MEET THE FLORIDA DF DEPARTMENT OF ENVIRONMENTAL PROTECTION REQUIREMENTS PER CHAPTER 62-555, F.A.C.

PROTECTION OF POTABLE WATER SUPPLY NOTES

ENGINEERING STANDARDS 2022

REVISIONS BY	DATE	ENGINEERING DIVISION CITY OF POMPANO BEACH	POTABLE WATER SUPPLY NOTES
S.S.	01/12		DATE: JAN. 2022
		SCALE: N.T.S.	DWG. NO. 122-3

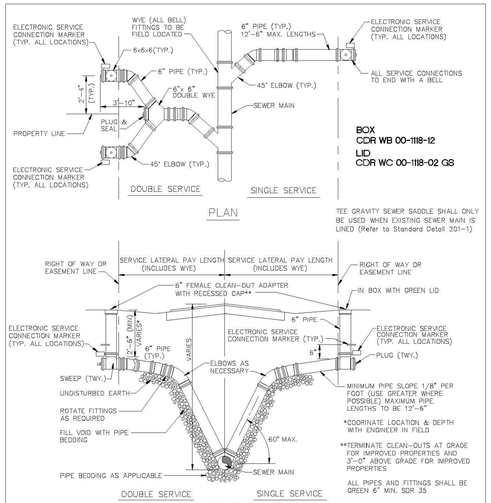

SERVICE LATERALS WITH RISERS

ENGINEERING STANDARDS 2022

REVISIONS BY	DATE	ENGINEERING DIVISION CITY OF POMPANO BEACH	SERVICE LATERALS
T.W.	11-2007		DATE: JUNE 2022
S.S.	01/27/12		DWG. NO. 200-1
S.S.	07/10/12		
S.S.	02/05/16	SCALE: N.T.S.	

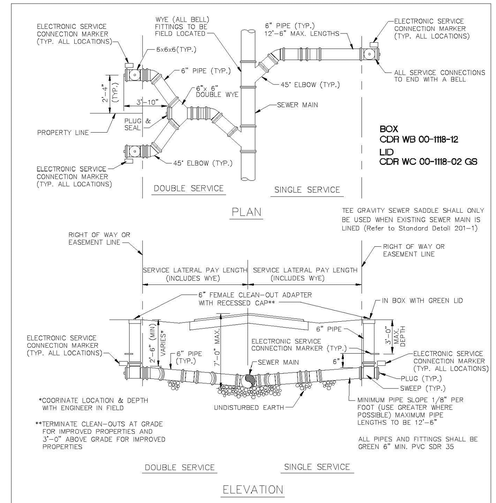

SHALLOW SERVICE LATERALS

ENGINEERING STANDARDS 2022

REVISIONS BY	DATE	ENGINEERING DIVISION CITY OF POMPANO BEACH	SERVICE LATERALS
T.W.	11-2007		DATE: JUNE 2022
S.S.	01/27/12		DWG. NO. 200-2
S.S.	07/10/12		
S.S.	02/10/16	SCALE: N.T.S.	

INLET: GASKETED BELL - SDR-35 PVC

Base Casting is ASTM A-48 Class 30 Cast Iron
(Various Contours available to fit 6.275" – 30.00" O.D. Mains)

PVC Adapter is an ASTM D3034, SDR-35 Gasketed Bell

Castings and Adapter cemented permanently in place with two-part urethane adhesive

Base of Saddle dip-coated in Waterbased Bituminous Coating

Strap is 24 ga. X 2.5" wide Type 304 Stainless Steel

Strap Pins are .75" dia. Type 303 Stainless Steel

T-Bolts are .375" – 16 Type 304 Stainless Steel

Nuts and Washers are Type 18-8 Stainless Steel

O-Ring is ASTM C-361-77 Tubular Polyisoprene

4" inlet requires a 4" x 6.50" oval tap in the Sewer Main

6" inlet requires a 6" x 9.25" oval tap in the Sewer Main
(Sewer Main must be at least 8" dia.)

Note: This Dwg. supercedes Dwg. No. R-3157-01

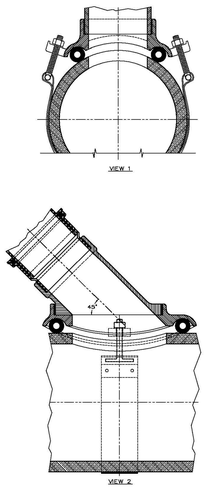

WYE GRAVITY SEWER SADDLE

TO BE USED WHEN A SEWER MAIN HAS BEEN LINED WITH A CURED IN PLACE MATERIAL.

ENGINEERING STANDARDS 2022

REVISIONS BY	DATE	ENGINEERING DIVISION CITY OF POMPANO BEACH	WYE GRAVITY SEWER SADDLE
			DATE: MAY 2022
		SCALE: N.T.S.	DWG. NO. 201-2

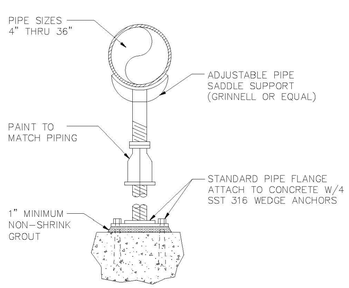

PIPE SUPPORT DETAIL

ENGINEERING STANDARDS 2022

REVISIONS BY	DATE	ENGINEERING DIVISION CITY OF POMPANO BEACH	PIPE SUPPORT DETAIL
S.S.	JUNE 2005		DATE: JUNE 2022
		SCALE: N.T.S.	DWG. NO. 204-1

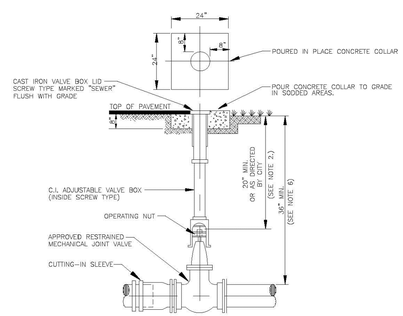

NOTES:

1. CONCRETE COLLAR IS NOT REQUIRED IN PAVED AREAS IF PAVEMENT SURFACE IS FINISHED PRIOR TO CONDITIONAL FINAL INSPECTION.
2. WHEN OPERATING NUT IS DEEPER THAN 36" A ONE PIECE EXTENSION WILL BE REQUIRED TO BRING OPERATING NUT 20"–30" BELOW FINISHED GRADE. EXTENSION BOLTS & NUTS ARE TO BE STAINLESS STEEL. A HIGH STRENGTH STEEL CENTERING PLATE, WELDED TO THE EXTENSION, IS ALSO REQUIRED.
3. VALVE BOXES SHALL HAVE COVERS MARKED "SEWER".
4. EXTENSION VALVE BOX TO BE D.I.P. OR C-900 PVC DR 18 (COLOR: GREEN)
5. A CUT-IN INSTALLATION SHALL REQUIRE MEGALUGS OR EQUAL THROUGHOUT ASSEMBLY.
6. IN ORDER TO MAINTAIN ADEQUATE COVER OVER VALVE NUT, THE FOLLOWING MINIMUM COVERS OVER PIPE ARE REQUIRED

GATE VALVE SIZE	MIN. COVER OVER PIPE
16"	48"
20"	54"
24"	60"
30"	72"
36"	84"

FORCE MAIN PLUG VALVE SETTING

ENGINEERING STANDARDS 2022

REVISIONS BY	DATE	ENGINEERING DIVISION CITY OF POMPANO BEACH	PLUG VALVE SETTING
S.S.	01/27/12		DATE: JUNE 2022
		SCALE: N.T.S.	DWG. NO. 205-1

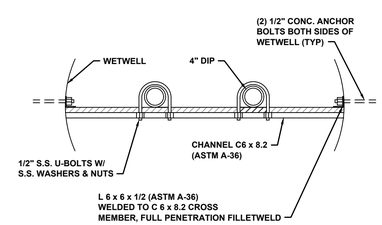

SUCTION PIPE SUPPORTS

N.T.S.

VERTICAL DATUM INFORMATION
ALL ELEVATIONS SHOWN ARE IN NORTH AMERICAN VERTICAL DATUM OF 1988 (NAVD88)

Sunshine 811
Call 811 or visit sunshine811.com two full business days before digging to have buried facilities located and marked.
Check positive response codes before you dig!

BID SET

cma
chen moore and associates
500 West Cypress Creek Road
Suite 600
Ft. Lauderdale, FL 33309
954.730.0707
www.chenmoore.com

REGISTRATION
DAVID EDGARDO CASTRO FELIU, PE
LICENSE NO. 85558
DATE: 01/03/25
DAVID EDGARDO CASTRO FELIU LICENSE No. 85558 STATE OF FLORIDA PROFESSIONAL ENGINEER
THIS SEAL IS ONLY VALID ON PRINTED COPIES THAT ARE DATED WITH THE LICENSEE'S ORIGINAL HAND SIGNATURE. SCANNED OR ELECTRONIC COPIES ARE NOT CONSIDERED SIGNED AND SEALED.

CLIENT
pompano beach
Florida's Warmest Welcome
CITY OF POMPANO BEACH
100 WEST ATLANTIC BOULEVARD
POMPANO BEACH, FL 33060
Phone: 954.786.4600

PROJECT INFORMATION

NON SEWER AREA C SANITARY SEWER IMPROVEMENTS

POMPANO BEACH, FL

PROJECT NUMBER
23-0092.00085

CLIENT PROJECT NUMBER
P331425

VERIFY SCALES
0 1"
IF NOT ONE INCH ON THIS SHEET, ADJUST SCALES ACCORDINGLY

REVISIONS

DATE OF ISSUE
01/03/25

DESIGNED BY
DC

DRAWN BY
JT

CHECKED BY
DC

DRAWING TITLE
DETAILS

DRAWING NUMBER
D-4
28 OF 43

Plot Date: 1/8/2025 6:10:47 PM Username: JTamo Layout Name: D-4
Folder Path: V:\Projects\2023\23-0092.00085 - area c sanitary sewer design services\Design\CAD\Sheets Filename: 23-0092.00085 Details.dwg

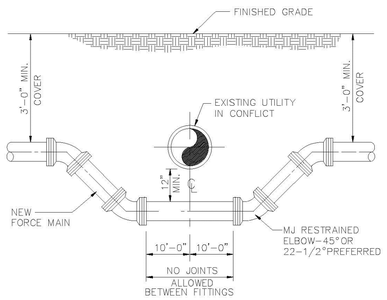

NOTES:

WHERE CONDITIONS PERMIT, PIPE DEFLECTION MAY BE USED INSTEAD OF BENDS TO OBTAIN THE MINIMUM CLEARANCE. FACTORY OFFSETS MAY BE USED.

TYPICAL CONFLICT DETAIL

ENGINEERING STANDARDS 2022

REVISIONS		ENGINEERING DIVISION CITY OF POMPANO BEACH	TYPICAL CONFLICT (SEWER)
BY	DATE		
S.S.	JUNE 2005		
S.S.	02/13/12		DATE: JUNE 2022
		SCALE: N.T.S.	DWG. NO. 206-1

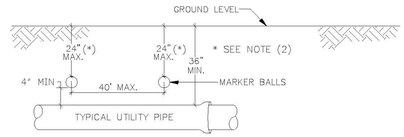

GENERAL NOTES:

1. ALL UTILITY PIPE SHALL BE INSTALLED WITH 4"ø MARKING BALLS PLACED EVERY 40' AND AT EVERY FITTING, FOR IDENTIFICATION AND WARNING PURPOSES, BURIED ABOVE THE PIPE AT A MAXIMUM DEPTH OF 24 INCHES OR AS APPROVED BY THE OWNER. IT SHALL BE COLOR CODED AND WORDED AS FOLLOWS:

   SEWER SYSTEM
   A. COLOR: GREEN
   B. LETTERING: SANITARY SEWER
   C. FREQUENCY OF MARKER BALLS SHALL BE 121.6 Khz.
   D. THE MARKER BALLS CAN BE BURIED IN ANY ORIENTATION.

   THE MARKER BALLS SHALL BE DETECTABLE BY STANDARD METAL DETECTION EQUIPMENT AND SHALL BE MANUFACTURED BY TEMPO OR 3M LOCATOR SYSTEM OR EQUIVALENT (FREQUENCY 121.6 Khz)

2. FOR LARGE DIAMETER PIPE INSTALLED AT DEPTHS BELOW 4'-0" MARKER BALLS SHALL BE PLACED AT A MAXIMUM DEPTH OF 4'-0" BELOW GRADE *.

SEWER PIPE IDENTIFICATION

ENGINEERING STANDARDS 2022

REVISIONS		ENGINEERING DIVISION CITY OF POMPANO BEACH	SEWER PIPE IDENTIFICATION
BY	DATE		
S.S.	01/30/12		DATE: JUNE 2022
		SCALE: N.T.S.	DWG. NO. 207-1

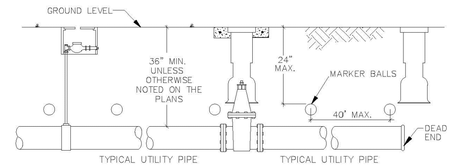

GENERAL NOTES:

1. ALL NONMETALLIC PIPE SHALL BE INSTALLED WITH 12 THHN SOLID COPPER TRACING WIRE.
2. THE MARKER BALLS MUST BE INSTALLED DIRECTLY ABOVE THE PIPE.
3. MARKER BALLS SHALL BE INSTALLED AT 40' O.C.
4. BALL COLOR CODING:
   SANITARY SEWER SYSTEM: GREEN

UTILITY PIPE AND MARKER BALLS LOCATION

ENGINEERING STANDARDS 2022

REVISIONS		ENGINEERING DIVISION CITY OF POMPANO BEACH	UTILITY PIPE AND MARKER BALLS LOCATION
BY	DATE		
S.S.	01/30/12		DATE: JUNE 2022
		SCALE: N.T.S.	DWG. NO. 208-1

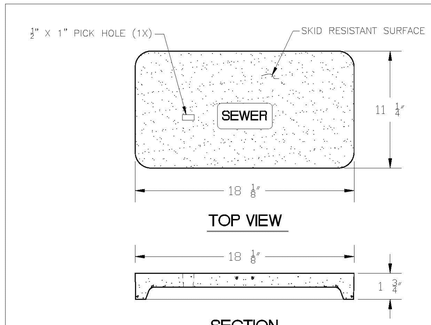

NOTE

1. MATERIAL: FIBERGLASS REINFORCED POLYMER CONCRETE & FIBERGLASS REINFORCED POLYMER
2. COLOR: GREEN
3. LOAD RATING: A8 (ASTM C857)
4. LOGO: SEWER

SEWER BOX AND COVER

PRODUCT RATING - NON TRAFFIC						
LOAD DESIGNATION	DESCRIPTION	DESIGN LOADS			TESTING	
		LIVE LB/WHEEL (2)	LIVE + IMPACT LB/WHEEL	SIDE PSF (3)	LOAD,LBS	SAFETY FACTOR
AASHTO H10	LIGHT TRUCK TRAFFIC	8,000	10,400	N/A	22,568 (4)	2.82

ENGINEERING STANDARDS 2022

REVISIONS		ENGINEERING DIVISION CITY OF POMPANO BEACH	SEWER BOX AND COVER CDR Part No. WB03-1118-12 CDR Part No. WC00-1118-02
BY	DATE		
			DATE: JUNE 2022
		SCALE: N.T.S.	DWG. NO. 210-1

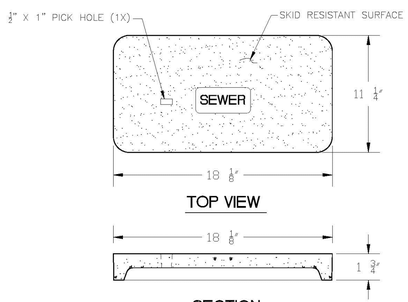

NOTE

1. MATERIAL: FIBERGLASS REINFORCED POLYMER CONCRETE & FIBERGLASS REINFORCED POLYMER
2. COLOR: GREEN
3. LOAD RATING: A8 (ASTM C857)
4. LOGO: SEWER

SEWER BOX AND COVER

PRODUCT RATING - TRAFFIC						
LOAD DESIGNATION	DESCRIPTION	DESIGN LOADS			TESTING	
		LIVE LB/WHEEL (2)	LIVE + IMPACT LB/WHEEL	SIDE PSF (3)	LOAD,LBS	SAFETY FACTOR
AASHTO H15	MEDIUM TRUCK TRAFFIC	12,000	15,600	N/A	27,000 (5)	2.25

ENGINEERING STANDARDS 2022

REVISIONS		ENGINEERING DIVISION CITY OF POMPANO BEACH	SEWER BOX AND COVER CDR Part No. WB04-1118-12 CDR Part No. WC02-1118-02
BY	DATE		
			DATE: JUNE 2022
		SCALE: N.T.S.	DWG. NO. 210-2

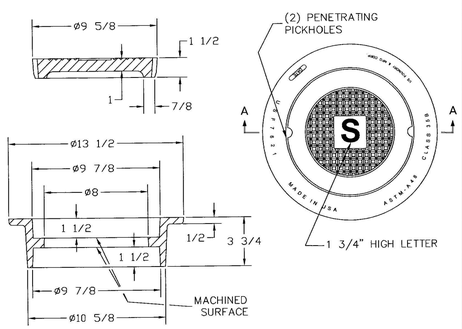

NOTE
MATERIAL: Gray Cast Iron
ASTM-A48 Class 35B

SEWER BOX AND COVER - HEAVY TRAFFIC

ENGINEERING STANDARDS 2022

REVISIONS		ENGINEERING DIVISION CITY OF POMPANO BEACH	SEWER BOX AND COVER HEAVY TRAFFIC
BY	DATE		
S.S.	12/06/18		DATE: JUNE 2022
		SCALE: N.T.S.	DWG. NO. 210-3

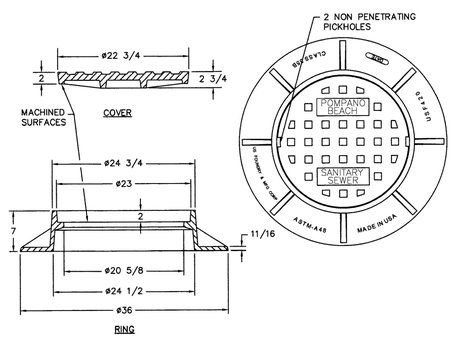

TRAFFIC RATED FRAME & COVER

ENGINEERING STANDARDS 2022

REVISIONS		ENGINEERING DIVISION CITY OF POMPANO BEACH	TRAFFIC RATED SEWER COVER
BY	DATE		
			DATE: JUNE 2022
		SCALE: N.T.S.	DWG. NO. 211-1

VERTICAL DATUM INFORMATION
ALL ELEVATIONS SHOWN ARE IN NORTH AMERICAN VERTICAL DATUM OF 1988 (NAVD88)

Sunshine 811
Call 811 or visit sunshine811.com two full business days before digging to have buried facilities located and marked.
Check positive response codes before you dig!

BID SET

cma
chen moore and associates
500 West Cypress Creek Road
Suite 600
Ft. Lauderdale, FL 33309
954.730.0707
www.chenmoore.com

REGISTRATION
DAVID EDGARDO CASTRO FELIU, PE
LICENSE NO. 85558
DATE: 01/03/25

DAVID EDGARDO CASTRO FELIU ★ LICENSE ★ No. 85558 ★ STATE OF FLORIDA ★ PROFESSIONAL ENGINEER

THIS SEAL IS ONLY VALID ON PRINTED COPIES THAT ARE DATED WITH THE LICENSEE'S ORIGINAL HAND SIGNATURE. SCANNED OR ELECTRONIC COPIES ARE NOT CONSIDERED SIGNED AND SEALED.

CLIENT
pompano beach
Florida's Warmest Welcome
CITY OF POMPANO BEACH
100 WEST ATLANTIC BOULEVARD
POMPANO BEACH, FL 33060
Phone: 954.786.4600

PROJECT INFORMATION

NON SEWER AREA C SANITARY SEWER IMPROVEMENTS

POMPANO BEACH, FL

PROJECT NUMBER
23-0092.00085

CLIENT PROJECT NUMBER
P331425

VERIFY SCALES
0 — 1"
IF NOT ONE INCH ON THIS SHEET, ADJUST SCALES ACCORDINGLY

REVISIONS

DATE OF ISSUE
01/03/25

DESIGNED BY
DC

DRAWN BY
JT

CHECKED BY
DC

DRAWING TITLE
DETAILS

DRAWING NUMBER
D-5
29 OF 43

Plot Date: 1/3/2025 12:32:47 PM Username: jspicer Layout Name: D-5
Folder Path: V:\Projects\2023\23-0092.00085 - area c sanitary sewer design services\Design\CAD\Sheets Filename: 23-0092.00085 Details.dwg

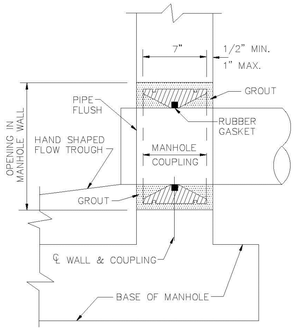

MANHOLE COUPLING

ENGINEERING STANDARDS 2022

REVISIONS		ENGINEERING DIVISION CITY OF POMPANO BEACH	MANHOLE COUPLING
BY	DATE		DATE: JUNE 2022
S.S.	JUNE 2005		DWG. NO.
		SCALE: N.T.S.	212-1

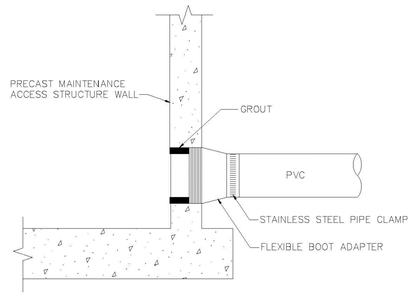

STANDARD PRECAST MAINTENANCE ACCESS STRCTURE PIPE CONNECTION

NOTE:
C.O.P.B. MAY APPROVE ALTERNATE WATER TIGHT CONNECTION.

ENGINEERING STANDARDS 2022

REVISIONS		ENGINEERING DIVISION CITY OF POMPANO BEACH	MAINTENANCE ACCESS STRUCTURE
BY	DATE		DATE: JUNE 2022
			DWG. NO.
		SCALE: N.T.S.	212-2

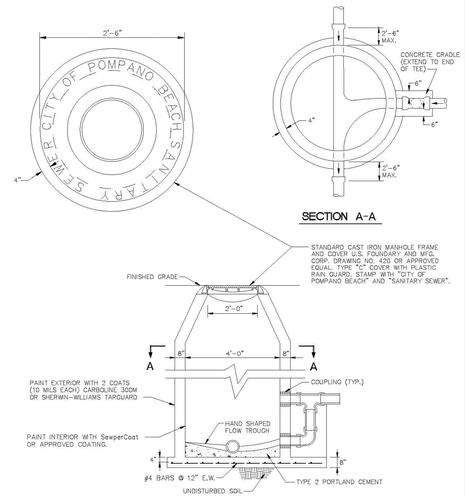

TYPE "A" DROP MANHOLE

TO BE USED WHERE DROP IS 2 FEET OR MORE

ENGINEERING STANDARDS 2022

REVISIONS		ENGINEERING DIVISION CITY OF POMPANO BEACH	TYPE "A" DROP MANHOLE
BY	DATE		DATE: JUNE 2022
S.S.	JUNE 2005		DWG. NO.
T.W.	11-2007		213-1
S.S.	12-2013	SCALE: N.T.S.	
A.S.	09-2021		

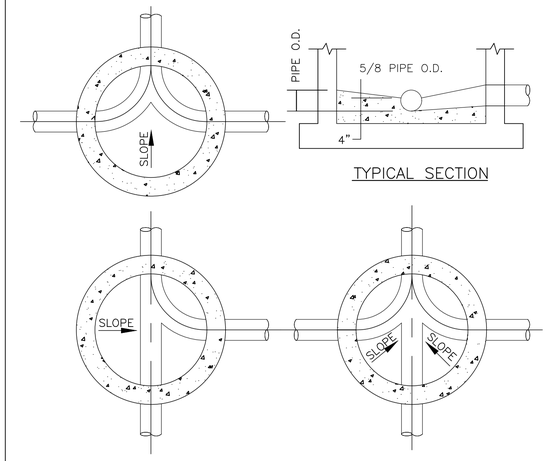

NOTES:

1. INVERT CHANNELS TO BE CONSTRUCTED FOR SMOOTH FLOW WITH NO OBSTRUCTIONS.
2. SPILLWAYS SHALL BE CONSTRUCTED BETWEEN PIPES WITH DIFFERENT INVERT ELEVATIONS PROVIDING FOR SMOOTH FLOWS.
3. CHANNELS TO BE FORMED IN ALL MANHOLES TO ACCEPT T.V. CAMERA.
4. NO INSIDE DROP LARGER THAN 6" SHALL BE ALLOWED WITH 3 OR 4INVERTS AND MANHOLES WITH A CHANGE OF DIRECTION OF FLOW OF MORE THAN 45 DEGREES.
5. SERVICE LATERALS SHALL NOT ENTER MANHOLES UNLESS SPECIFIED ON PLANS AND THEN MUST BE TREATED AS MAINS.

MANHOLE FLOW CHANNELS

SCALE: N.T.S.

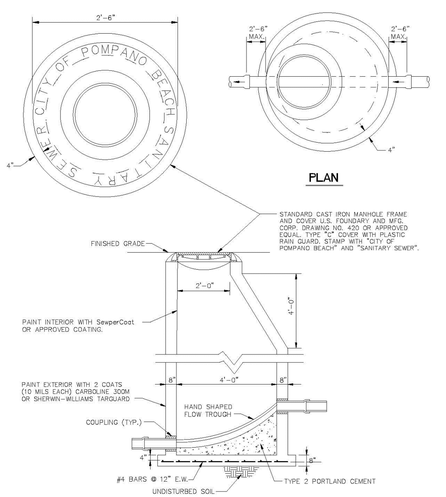

TYPE "B" DROP MANHOLE

TO BE USED WHERE DROP IS LESS THAN 2 FEET

ENGINEERING STANDARDS 2022

REVISIONS		ENGINEERING DIVISION CITY OF POMPANO BEACH	TYPE "B" DROP MANHOLE
BY	DATE		DATE: JUNE 2022
S.S.	JUNE 2005		DWG. NO.
T.W.	11-2007		214-1
S.S.	12-2013	SCALE: N.T.S.	
A.S.	09-2021		

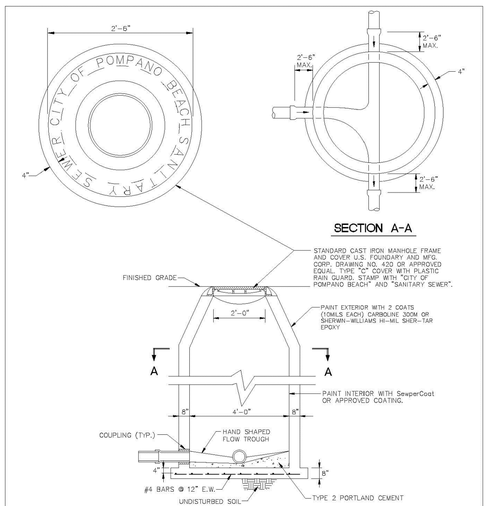

STANDARD MANHOLE

TO BE USED WHERE DEPTH EXCEEDS 4 FEET

ENGINEERING STANDARDS 2022

REVISIONS		ENGINEERING DIVISION CITY OF POMPANO BEACH	STANDARD MANHOLE
BY	DATE		DATE: JUNE 2022
S.S.	JUNE 2005		DWG. NO.
T.W.	11-2007		215-1
S.S.	12-2013	SCALE: N.T.S.	
A.S.	09-2021		

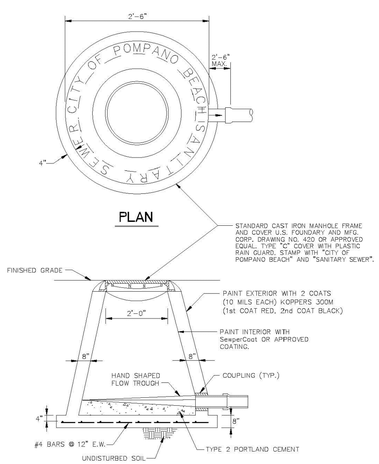

SHALLOW TYPE MANHOLE

TO BE USED WHERE DEPTH IS LESS THAN 4 FEET

ENGINEERING STANDARDS 2022

REVISIONS		ENGINEERING DIVISION CITY OF POMPANO BEACH	SHALLOW TYPE MANHOLE
BY	DATE		DATE: JUNE 2022
S.S.	JUNE 2005		DWG. NO.
T.W.	11-2007		216-1
A.S.	09-2021	SCALE: N.T.S.	

VERTICAL DATUM INFORMATION
ALL ELEVATIONS SHOWN ARE IN NORTH AMERICAN VERTICAL DATUM OF 1988 (NAVD88)

Sunshine 811
Call 811 or visit sunshine811.com two full business days before digging to have buried facilities located and marked.
Check positive response codes before you dig!

BID SET

cma
chen moore and associates
500 West Cypress Creek Road
Suite 600
Ft. Lauderdale, FL 33309
954.730.0707
www.chenmoore.com

REGISTRATION
DAVID EDGARDO CASTRO FELIU, PE
LICENSE NO. 85558
DATE: 01/03/25

DAVID EDGARDO CASTRO FELIU LICENSE No. 85558 STATE OF FLORIDA PROFESSIONAL ENGINEER

THIS SEAL IS ONLY VALID ON PRINTED COPIES THAT ARE DATED WITH THE LICENSEE'S ORIGINAL HAND SIGNATURE. SCANNED OR ELECTRONIC COPIES ARE NOT CONSIDERED SIGNED AND SEALED.

CLIENT
pompano beach
Florida's Warmest Welcome
CITY OF POMPANO BEACH
100 WEST ATLANTIC BOULEVARD
POMPANO BEACH, FL 33060
Phone: 954.786.4600

PROJECT INFORMATION

NON SEWER AREA C SANITARY SEWER IMPROVEMENTS

POMPANO BEACH, FL

PROJECT NUMBER 23-0092.00085

CLIENT PROJECT NUMBER P331425

VERIFY SCALES
0 — 1"
IF NOT ONE INCH ON THIS SHEET, ADJUST SCALES ACCORDINGLY

REVISIONS

DATE OF ISSUE 01/03/25

DESIGNED BY DC

DRAWN BY JT

CHECKED BY DC

DRAWING TITLE

DETAILS

DRAWING NUMBER
D-6
30 OF 43

Plot Date: 1/3/2025 12:32:50 PM Username: jspicer Layout Name: D-6
Folder Path: V:\Projects\2023\23-0092.00085 - area c sanitary sewer design services\Design\CAD\Sheets Filename: 23-0092.00085 Details.dwg

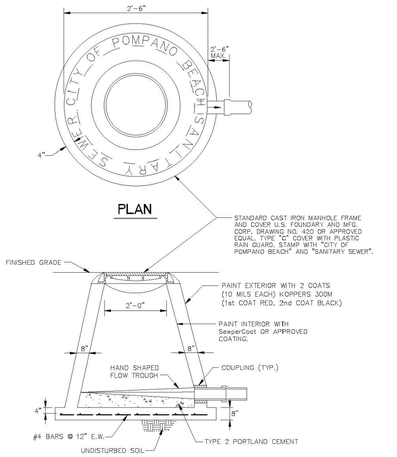

SHALLOW TYPE MANHOLE

TO BE USED WHERE DEPTH IS LESS THAN 4 FEET

ENGINEERING STANDARDS 2022

REVISIONS		ENGINEERING DIVISION CITY OF POMPANO BEACH	SHALLOW TYPE MANHOLE
BY	DATE		
S.S.	JUNE 2005		
T.W.	11-2007		
A.S.	09-2021	SCALE: N.T.S.	DATE: JUNE 2022 DWG. NO. 216-1

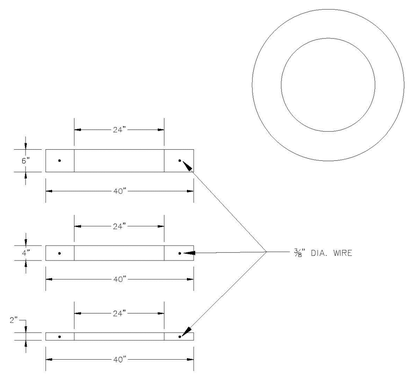

CONCRETE GRADE RINGS

ALL CONCRETE SHALL BE 4000 PSI @ 28 DAYS

NOTES:

2" 0.054 c.y. / 220 lbs
4" 0.108 c.y. / 430 lbs
6" 0.162 c.y. / 650 lbs

ENGINEERING STANDARDS 2022

REVISIONS		ENGINEERING DIVISION CITY OF POMPANO BEACH	CONCRETE GRADE RINGS
BY	DATE		
		SCALE: N.T.S.	DATE: JUNE 2022 DWG. NO. 216-2

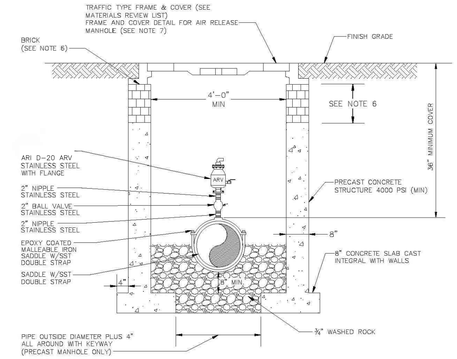

NOTES:

1. BALL VALVE, PIPING, ETC., TO MATCH AIR RELEASE VALVE DIAMETER.
2. MISCELLANEOUS ARV ACCESSORIES SHALL BE SELF-CONTAINED AUTOMATIC PROCESS VALVES.
3. RAMNEK AT ALL RISER JOINTS WITH GROUT ON INSIDE AND OUTSIDE AT ALL RISER JOINTS.
4. MANHOLE FABRICATION SHALL BE IN ACCORDANCE WITH ASTM C-478, LATEST STANDARD.
5. COAT INSIDE AND OUTSIDE OF MANHOLE WITH PROTECTIVE COATINGS.
6. THE CHIMNEY AREA SHALL BE A MINIMUM OF 4" AND A MAXIMUM OF 12" IN HEIGHT. A MINIMUM OF 3 COURSES OF BRICK SHALL BE INSTALLED. SET IN 2 STRIPS OF SEALANT/ADHESIVE COMPOUND ON EACH SEALING FACE.
7. SET MANHOLE FRAME ON 2 STRIPS OF SEALANT PLUS A BED OF PORTLAND CEMENT AND SILICA SAND. BRING MORTAR UP OVER FRAME.

SEWAGE AIR RELEASE VALVE

ENGINEERING STANDARDS 2022

REVISIONS		ENGINEERING DIVISION CITY OF POMPANO BEACH	SEWAGE AIR RELEASE VALVE
BY	DATE		
S.S.	JUNE 2005		
S.S.	01/30/12		
		SCALE: N.T.S.	DATE: JUNE 2022 DWG. NO. 217-1

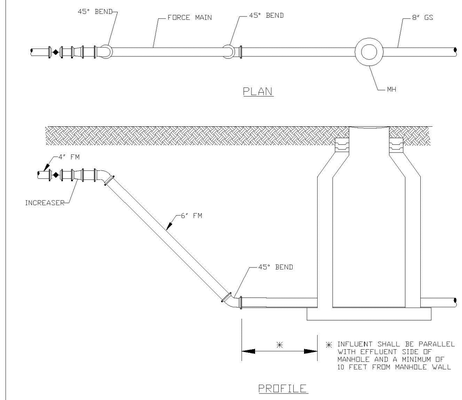

NOTES:

1. TO BE USED ONLY WITH APPROVAL OF C.O.P.B. UTILITIES DEPARTMENT.
2. INTERIOR OF MANHOLE TO BE COATED AS DIRECTED BY C.O.P.B. UTILITIES DEPARTMENT.

FORCE MAIN CONNECTION TO GRAVITY SEWER

ENGINEERING STANDARDS 2022

REVISIONS		ENGINEERING DIVISION CITY OF POMPANO BEACH	FORCE MAIN CONNECTION TO GRAVITY SEWER
BY	DATE		
S.S.	10/22/12		
		SCALE: N.T.S.	DATE: JUNE 2022 DWG. NO. 218-1

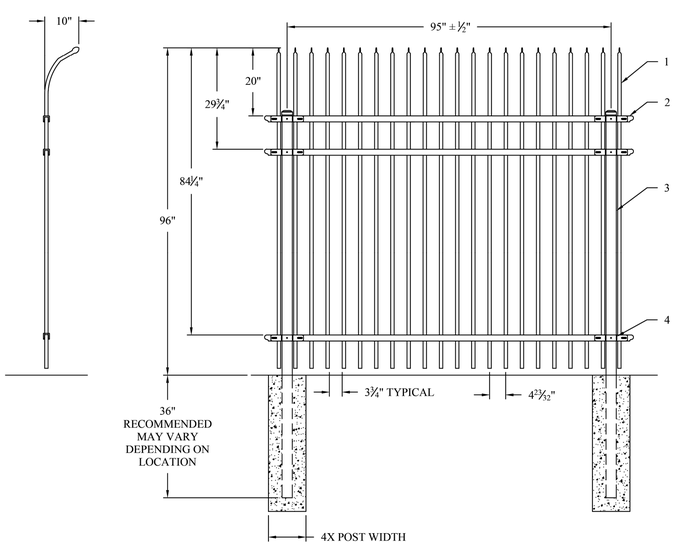

TOP VIEW

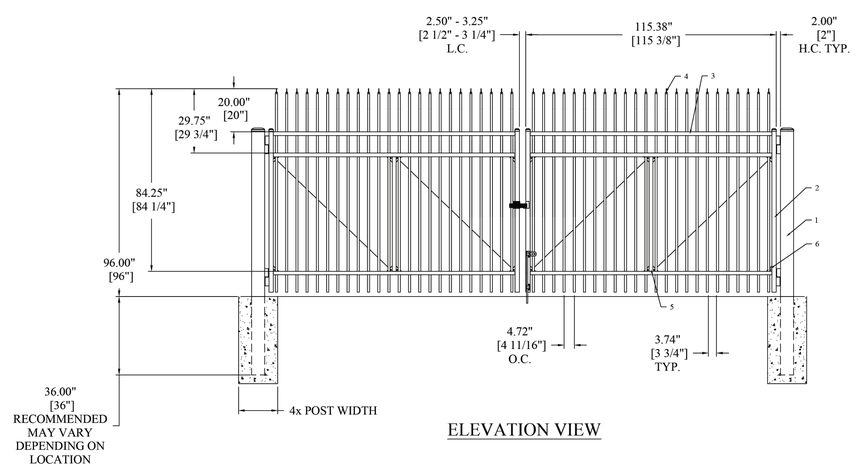

ELEVATION VIEW

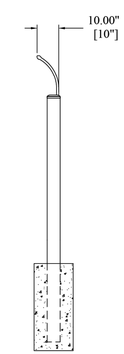

SIDE VIEW

VERTICAL DATUM INFORMATION
ALL ELEVATIONS SHOWN ARE IN NORTH AMERICAN VERTICAL DATUM OF 1988 (NAVD88)

Sunshine 811
Call 811 or visit sunshine811.com two full business days before digging to have buried facilities located and marked.
Check positive response codes before you dig!

BID SET

cma
chen moore and associates
500 West Cypress Creek Road
Suite 600
Ft. Lauderdale, FL 33309
954.730.0707
www.chenmoore.com

REGISTRATION
DAVID EDGARDO CASTRO FELIU, PE
LICENSE NO. 85558
DATE: 01/03/25

DAVID EDGARDO CASTRO FELIU LICENSE No. 85558 STATE OF FLORIDA PROFESSIONAL ENGINEER

THIS SEAL IS ONLY VALID ON PRINTED COPIES THAT ARE DATED WITH THE LICENSEE'S ORIGINAL HAND SIGNATURE. SCANNED OR ELECTRONIC COPIES ARE NOT CONSIDERED SIGNED AND SEALED.

CLIENT
pompano beach
Florida's Warmest Welcome
CITY OF POMPANO BEACH
100 WEST ATLANTIC BOULEVARD
POMPANO BEACH, FL 33060
Phone: 954.786.4600

PROJECT INFORMATION

NON SEWER AREA C SANITARY SEWER IMPROVEMENTS

POMPANO BEACH, FL

PROJECT NUMBER
23-0092.00085

CLIENT PROJECT NUMBER
P331425

VERIFY SCALES
0 1"
IF NOT ONE INCH ON THIS SHEET, ADJUST SCALES ACCORDINGLY

REVISIONS

DATE OF ISSUE
01/03/25

DESIGNED BY
DC

DRAWN BY
JT

CHECKED BY
DC

DRAWING TITLE
DETAILS

DRAWING NUMBER
D-7

Plot Date: 1/3/2025 12:23:52 PM Username: jspicer Layout Name: D-7
Folder Path: V:\Projects\2023\23-0092.00085 - area c sanitary sewer design services\Design\CAD\Sheets Filename: 23-0092.00085 Details.dwg

BROWARD COUNTY
PUBLIC WORKS DEPARTMENT

WATER & WASTEWATER SERVICES
ENGINEERING DIVISION
2555 WEST COPANS ROAD
POMPANO BEACH, FL 33069

PHONE NO. 954-831-0745
FAX: 954-831-0925

STANDARD DETAIL

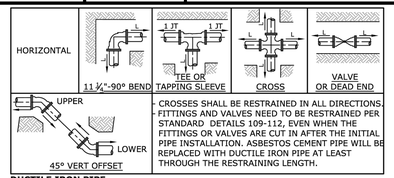

- CROSSES SHALL BE RESTRAINED IN ALL DIRECTIONS.
- FITTINGS AND VALVES NEED TO BE RESTRAINED PER STANDARD DETAILS 109-112, EVEN WHEN THE FITTINGS OR VALVES ARE CUT IN AFTER THE INITIAL PIPE INSTALLATION. ASBESTOS CEMENT PIPE WILL BE REPLACED WITH DUCTILE IRON PIPE AT LEAST THROUGH THE RESTRAINING LENGTH.

DUCTILE IRON PIPE

	HORIZONTAL, L (FEET)						45° VERTICAL OFFSET (FEET)	
Diameter	11 ¼°	22 ½°	45°	90°	Tee or Cross	Valves and Dead End	UPPER	LOWER
4	1	2	4	10	7	20	9	4
6	2	3	6	14	15	28	12	5
8	2	4	8	17	23	37	16	7
10	2	5	9	21	30	44	19	8
12	3	5	10	24	38	52	22	9

PVC PIPE

	HORIZONTAL, L (FEET)						45° VERTICAL OFFSET (FEET)	
Diameter	11 ¼°	22 ½°	45°	90°	Tee or Cross	Valves and Dead End	UPPER	LOWER
4	2	3	5	12	11	32	14	5
6	2	4	7	16	23	45	19	6
8	3	5	9	21	37	59	25	8
10	3	5	11	25	48	71	30	9
12	3	6	12	29	61	83	35	11

THE NOTED REQUIREMENTS WERE CALCULATED IN ACCORDANCE WITH THRUST RESTRAINT CALCULATOR V7.2 BY EBAA IRON WITH THE FOLLOWING ASSUMPTIONS:
SOIL CONDITIONS: SW OR GW; NOMINAL SIZE EQUALS BRANCH SIZE; LENGTH ALONG RUN EQUALS 4 FEET
LAYING CONDITION: 4, SAND BEDDING, BACKFILL COMPACTED > 80%; VERTICAL LOW SIDE DEPTH EQUALS 3.5 FEET
MINIMUM COVER: 3.0 FT SAFETY FACTOR: 1.5 BARE PIPE (NO POLY WRAP)
IF FIELD CONDITIONS DIFFER FROM THE ABOVE, CONTRACTOR SHALL NOTIFY WWS.
FOR PIPE LARGER THAN INCLUDED IN THE ABOVE TABLES, ENGINEER OF RECORD SHALL SUBMIT CALCULATIONS FOR EACH JOINT REQUIRING RESTRAINT.

SINGLE FITTING RESTRAINED JOINT
150 PSI TEST PRESSURE

REVISED 7/7/2021

RESTRAINED JOINT
REQUIREMENTS SINGLE FITTING

FIGURE 109

BROWARD COUNTY
PUBLIC WORKS DEPARTMENT

WATER & WASTEWATER SERVICES
ENGINEERING DIVISION
2555 WEST COPANS ROAD
POMPANO BEACH, FL 33069

PHONE NO. 954-831-0745
FAX: 954-831-0925

STANDARD DETAIL

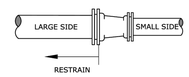

STRAIGHT REDUCER

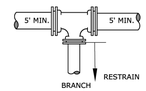

TEE REDUCER

DUCTILE IRON PIPE (SMALL SIDE)

DIAMETER	6"	8"	10"	12"
4"	15'	27'	36'	45'
6"		16'	27'	38'
8"			15'	28'
10"				16'

PVC PIPE

	6"	8"	10"	12"
4"	24'	43'	58'	72'
6"		25'	44'	61'
8"			24'	44'
10"				25'

DUCTILE IRON PIPE (BRANCH SIZE)

DIAMETER	6"	8"	10"	12"
4"	1'	1'	1'	1'
6"		6'	1'	1'
8"			15'	10'
10"				23'

PVC PIPE

	6"	8"	10"	12"
4"	1'	1'	1'	1'
6"		16'	8'	1'
8"			31'	25'
10"				44'

THE NOTED REQUIREMENTS WERE CALCULATED IN ACCORDANCE WITH THRUST RESTRAINT CALCULATOR V7.2 BY EBAA IRON WITH THE FOLLOWING ASSUMPTIONS:
SOIL CONDITIONS: SW OR GW; LENGTH ALONG RUN EQUALS 4 FEET
LAYING CONDITION: 4, SAND BEDDING, BACKFILL COMPACTED > 80%
MINIMUM COVER: 3.0 FT;SAFETY FACTOR: 1.5;BARE PIPE (NO POLY WRAP)
IF FIELD CONDITIONS DIFFER FROM THE ABOVE, CONTRACTOR SHALL NOTIFY WWS.
FOR PIPE LARGER THAN INCLUDED IN THE ABOVE TABLES, ENGINEER OF RECORD SHALL SUBMIT CALCULATIONS FOR EACH JOINT REQUIRING RESTRAINT.

RESTRAINED REDUCING FITTING
150 PSI TEST PRESSURE

REVISED 7/7/2021

RESTRAINED JOINT
REQUIREMENTS REDUCING FITTINGS

FIGURE 112

BROWARD COUNTY
PUBLIC WORKS DEPARTMENT

WATER & WASTEWATER SERVICES
ENGINEERING DIVISION
2555 WEST COPANS ROAD
POMPANO BEACH, FL 33069

PHONE NO. 954-831-0745
FAX: 954-831-0925

STANDARD DETAIL

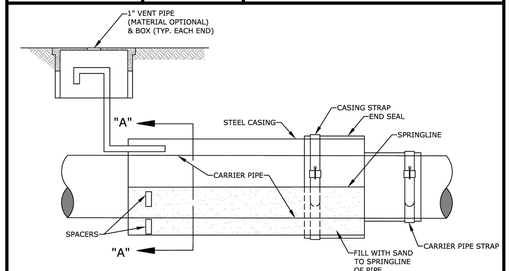

CASING SEAL

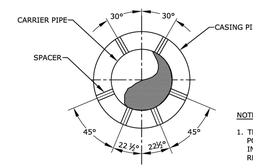

SECTION "A-A"

CASING SPACERS

NOTES:

1. THE DISTANCE BETWEEN SPACERS & THEIR POSITIONING ON THE CARRIER PIPE IS TO BE IN ACCORDANCE WITH THE MANUFACTURER'S RECOMMENDATIONS.
2. THE CARRIER PIPE SHALL BE CENTERED IN THE CASING PIPE. THE SKIDS ON THE SPACER SHALL RESTRAIN CARRIER PIPE MOVEMENT.

REVISED 7/7/2021

CASING PIPE DETAIL
JACK AND BORE

FIGURE 154

BROWARD COUNTY
PUBLIC WORKS DEPARTMENT

WATER & WASTEWATER SERVICES
ENGINEERING DIVISION
2555 WEST COPANS ROAD
POMPANO BEACH, FL 33069

PHONE NO. 954-831-0745
FAX: 954-831-0925

STANDARD DETAIL

SPECIFICATIONS FOR CARRIER AND CASING PIPES

	CARRIER PIPE	CASING PIPE
CONTENTS TO BE HANDLED	WATER/WASTEWATER	NONE
OUTSIDE DIAMETER	DETERMINED BY PROJECT	SEE TABLE
PIPE MATERIAL	DIP	STEEL
SPECIFICATION AND GRADE	ANSI/AWWA C151/A21.51	ASTM A139, GRADE"B"
PRESSURE CLASS/WALL THICKNESS	350	0.500"
ACTUAL WORKING PRESSURE	150 PSI	NONE
TYPE OF JOINT	RESTRAINED	WELDED
COATING	BLACK BITUMINOUS	BLACK BITUMINOUS
METHOD OF INSTALLATION	CASING SPACERS	JACK AND BORE
PROTECTION AT ENDS OF CASING	N/A	CASING END SEAL

NOTES:

1. CASING PIPE TO BE INSTALLED UNDER ROAD BY JACKING AND BORING.
2. ALL WORK DONE WITHIN FDOT OR RAILROAD RIGHT OF WAY IS SUBJECT TO INSPECTION AND DIRECTION OF THEIR ENGINEER.
3. ALL WORK SHALL BE DONE IN ACCORDANCE WITH CURRENT AWWA STANDARDS FOR PIPE LINES CONVEYING NONFLAMMABLE SUBSTANCES AND FDOT REQUIREMENTS AS PER UTILITY ACCOMMODATION GUIDE, LATEST VERSION.
4. FIELD AND SHOP WELDS OF THE CASING PIPES SHALL CONFORM WITH AWS STANDARD SPECIFICATIONS. FIELD WELDS SHALL BE COMPLETE PENETRATIONS, SINGLE-BEVEL GROOVE TYPE JOINTS.
5. STEEL CASING SHALL CONFORM TO THE REQUIREMENTS OF ASTM DESIGNATION A139. THE CASING PIPES SHALL HAVE THE MINIMUM NOMINAL DIAMETER AND MINIMUM WALL THICKNESS AS SHOWN.
6. CONTRACTOR SHALL VERIFY LOCATION AND DEPTH OF ALL EXISTING UTILITIES PRIOR TO STARTING JACKING AND BORING.
7. MINIMUM VERTICAL CLEARANCE BETWEEN PROPOSED CASING PIPE AND OTHER EXISTING UTILITIES SHALL BE 12" MINIMUM.
8. STAINLESS STEEL CASING SPACERS WITH POLYMER RUNNERS SUBJECT TO APPROVAL OF WWS.

CARRIER PIPE SIZE	NOMINAL DIA OF STEEL CASING PIPE
6"	14"
8"	16"
10"	20"
12"	24"
14"	24"
16"	30"
18"	34"
20"	36"
24"	42"
30"	42"
36"	48"
42"	54"
48"	72"

REVISED 7/7/2021

JACK AND BORE
PIPE DETAILS

FIGURE 155

BROWARD COUNTY
PUBLIC WORKS DEPARTMENT

WATER & WASTEWATER SERVICES
ENGINEERING DIVISION
2555 WEST COPANS ROAD
POMPANO BEACH, FL 33069

PHONE NO. 954-831-0745
FAX: 954-831-0925

STANDARD DETAIL

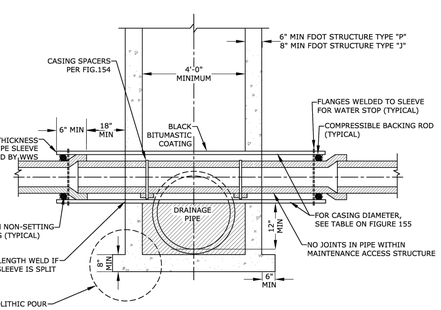

NOTES:

1. ALL CONFLICT MAINTENANCE ACCESS STRUCTURES SHALL CONFORM TO THE DETAILS SHOWN ON THIS DRAWING, AND TO THE REQUIREMENTS OF ASTM C-478 AND BROWARD COUNTY HIGHWAY CONSTRUCTION AND ENGINEERING DIVISION'S "MINIMUM STANDARDS", LATEST EDITION.
2. POTABLE WATER PIPE SHALL NOT PASS THROUGH OR CONTACT STORM DRAINAGE MAINTENANCE ACCESS STRUCTURE WITHOUT WRITTEN PERMISSION OF WWS TECHNICAL STANDARDS COMMITTEE.
3. POTABLE WATER PIPE SHALL NOT PASS THROUGH OR CONTACT SANITARY SEWER MAINTENANCE ACCESS STRUCTURE.
4. MINIMUM TWO (2) FOOT CLEARANCE REQUIRED BETWEEN OUTSIDE OF SLEEVE AND PARALLEL WALL.

REVISED 7/7/2021

CONFLICT
MAINTENANCE ACCESS STRUCTURE

FIGURE 167

BROWARD COUNTY
PUBLIC WORKS DEPARTMENT

WATER & WASTEWATER SERVICES
ENGINEERING DIVISION
2555 WEST COPANS ROAD
POMPANO BEACH, FL 33069

PHONE NO. 954-831-0745
FAX: 954-831-0925

STANDARD DETAIL

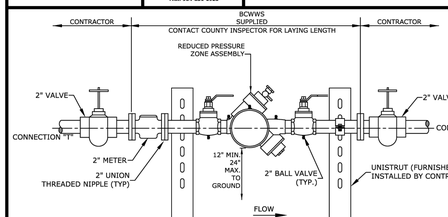

JUMPER ASSEMBLY

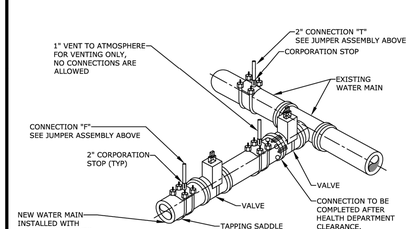

NOTES:

1. A BCWWS SUPPLIED FIRE HYDRANT BACKFLOW METER WITH RPZ MAY BE USED IN LIEU OF THE JUMPER ASSEMBLY.
2. SEE DETAIL 205B FOR ADDITIONAL REQUIREMENTS.

REVISED 7/7/2021

FILLING AND FLUSHING
JUMPER CONNECTION

FIGURE 205A

BROWARD COUNTY
PUBLIC WORKS DEPARTMENT

WATER & WASTEWATER SERVICES
ENGINEERING DIVISION
2555 WEST COPANS ROAD
POMPANO BEACH, FL 33069

PHONE NO. 954-831-0745
FAX: 954-831-0925

STANDARD DETAIL

1. A FILLING AND FLUSHING JUMPER ASSEMBLY CONNECTION IS REQUIRED AT ALL CONNECTIONS BETWEEN EXISTING ACTIVE BCWWS WATER MAINS AND NEW WATER MAINS. THE PROCEDURES ARE APPLICABLE WHEN CONNECTING TO AN EXISTING BCWWS WATER MAIN, WHETHER BY TAPPING TEE AND VALVE OR BY CONTINUATION OF A PLUGGED STUB OUT WITH AN EXISTING GATE VALVE.

2. THE CONTRACTOR SHALL CONTACT BCWWS REGARDING SCHEDULING OF REQUIRED INSPECTIONS RELATING TO THE CONNECTION. BCWWS INSPECTIONS ARE SPECIFICALLY REQUIRED FOR TIE-INS OR WET TAPS TO EXISTING WATER MAINS, JUMPER ASSEMBLY CONNECTION INSTALLATION, FLUSHING, PRESSURE TESTING, DISINFECTION, SAMPLING, PLUGGING OF SAMPLING POINTS AND PERMANENT CONNECTION OF THE NEW WATER MAIN. THE CONTRACTOR SHALL FOLLOW ALL PROCEDURES STRICTLY IN ACCORDANCE WITH BCWWS STANDARDS.

3. THE JUMPER ASSEMBLY (2" DIAMETER FLANGE TO FLANGE) WILL BE SUPPLIED BY BCWWS AND INSTALLED AND TESTED BY THE CONTRACTOR, IN COORDINATION WITH THE ENGINEER OF RECORD (EOR) AND BCWWS. OTHER MATERIALS AND INSTALLATION REQUIRED FOR THE CONNECTION ARE THE RESPONSIBILITY OF THE CONTRACTOR. THE UNDERGROUND FITTINGS SHALL BE RESTRAINED MECHANICAL JOINT TYPE. ALL MATERIALS SHALL BE PER THE BCWWS APPROVED PRODUCT SPECIFICATION SHEETS. THE JUMPER SHALL BE MAINTAINED BY THE CONTRACTOR UNTIL IT IS REMOVED. JUMPER ASSEMBLIES 3" AND LARGER SHALL BE SUPPLIED AND INSTALLED BY THE CONTRACTOR IN COORDINATION WITH BCWWS.

4. ALL NEW WATER MAINS SHALL BE FLUSHED, PRESSURE TESTED AND DISINFECTED. NEW MAINS SHALL NOT BE PLACED INTO SERVICE UNTIL THE BACTERIOLOGICAL TEST RESULTS ARE SATISFACTORY AND A WRITTEN APPROVAL HAS BEEN OBTAINED FROM BCWWS, AS WELL AS CERTIFICATION FROM THE FLORIDA DEPARTMENT OF HEALTH.

5. THE WATER MAINS SHALL BE PRESSURE TESTED AFTER FLUSHING AND PRIOR TO DISINFECTION. ALL VALVES SHALL REMAIN CLOSED DURING THE PRESSURE TEST AND WILL NOT BE OPENED UNTIL THE RESULTS OF PRESSURE TESTING AND BACTERIOLOGICAL TESTING ARE SATISFACTORY AND THE SYSTEM HAS BEEN ACCEPTED FOR OPERATION BY BCWWS, AND HAS RECEIVED CERTIFICATION FROM THE FLORIDA DEPARTMENT OF HEALTH.

6. DISINFECTION SHALL BE CONDUCTED IN ACCORDANCE WITH AWWA C651. A MINIMUM PRESSURE OF 25 PSI SHALL BE MAINTAINED IN THE NEW MAIN AFTER DISINFECTION AT ALL TIMES.

7. PERMANENT CONNECTION TO EXISTING MAINS BY OPENING OF MAIN VALVES SHALL NOT BE MADE PRIOR TO BACTERIOLOGICAL CLEARANCE AND UNTIL APPROVED BY BCWWS AND CERTIFIED BY THE FLORIDA DEPARTMENT OF HEALTH.

8. UPON BACTERIOLOGICAL CLEARANCE, THE SAMPLING POINTS SHALL BE REMOVED AND PLUGGED BY THE CONTRACTOR. THE CONTRACTOR SHALL MAKE THE PERMANENT CONNECTION IN THE PRESENCE OF A BCWWS INSPECTOR. THE PIPE AND FITTINGS FOR CONNECTION SHALL BE DISINFECTED BY SPRAYING AND SWABBING WITH CHLORINE. THE JUMPER ASSEMBLY (FLANGE TO FLANGE) WILL BE REMOVED BY THE CONTRACTOR IN COORDINATION WITH BCWWS. THE CONTRACTOR SHALL REMOVE THE REMAINDER OF THE JUMPER CONNECTION PIPING AND PLUG THE CORPORATION STOP VALVES.

REVISED 7/7/2021

FILLING AND FLUSHING
JUMPER CONNECTION

FIGURE 205B

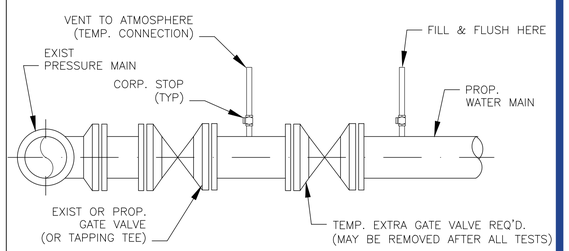

1. PRESSURE MAIN TO BE PRESSURE TESTED ACCORDING TO SPECIFICATIONS.
2. REMOVE THE EXTRA VALVE.
3. DO NOT REMOVE TEMPORARY CONNECTION UNTIL ALL TESTING HAS BEEN COMPLETED.
4. TEMPORARY CONNECTION SIZE AS REQUIRED BY THE UTILITY DEPT.
5. REFER TO CONTRACT SPECIFICATIONS FOR TEST PRESSURES.

FILLING AND FLUSHING CONNECTION DETAIL

N.T.S.

VERTICAL DATUM INFORMATION
ALL ELEVATIONS SHOWN ARE IN NORTH AMERICAN VERTICAL DATUM OF 1988 (NAVD88)

Sunshine 811
Call 811 or visit sunshine811.com two full business days before digging to have buried facilities located and marked.
Check positive response codes before you dig!

BID SET

---

cma
chen moore and associates
500 West Cypress Creek Road
Suite 600
Ft. Lauderdale, FL 33309
954.730.0707
www.chenmoore.com

REGISTRATION
DAVID EDGARDO CASTRO FELIU, PE
LICENSE NO. 85558
DATE: 11/08/24

DAVID EDGARDO CASTRO FELIU
LICENSE
No. 85558
STATE OF FLORIDA
PROFESSIONAL ENGINEER

THIS SEAL IS ONLY VALID ON PRINTED COPIES THAT ARE DATED WITH THE LICENSEE'S ORIGINAL HAND SIGNATURE. SCANNED OR ELECTRONIC COPIES ARE NOT CONSIDERED SIGNED AND SEALED.

CLIENT
pompano beach
Florida's Warmest Welcome
CITY OF POMPANO BEACH
100 WEST ATLANTIC BOULEVARD
POMPANO BEACH, FL 33060
Phone: 954.786.4600

PROJECT INFORMATION

NON SEWER AREA C SANITARY SEWER IMPROVEMENTS

POMPANO BEACH, FL

PROJECT NUMBER 23-0092.00085

CLIENT PROJECT NUMBER P331425

VERIFY SCALES
0 — 1"
IF NOT ONE INCH ON THIS SHEET, ADJUST SCALES ACCORDINGLY

REVISIONS

DATE OF ISSUE 11/08/24

DESIGNED BY DC

DRAWN BY JT

CHECKED BY DC

DRAWING TITLE

DETAILS

DRAWING NUMBER
D-8
32 OF 43

Plot Date: 11/16/2024 12:17:54 AM Username: jspicer Layout Name: D-8
Folder Path: V:\Projects\2023\23-0092.00085 - area c sanitary sewer design services\Design\CAD\Sheets Filename: 23-0092.00085 Details.dwg

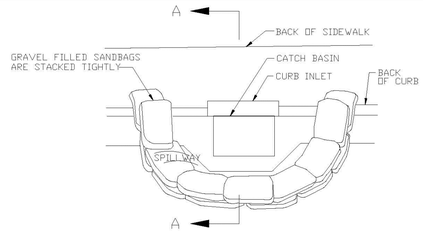

PLAN VIEW

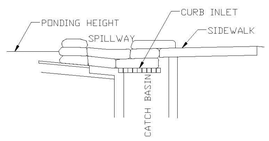

SECTION A-A

NOTES:
1. PLACE CURB TYPE SEDIMENT BARRIERS ON GENTLY SLOPING STREET SEGEMENTS, WHERE WATER CAN POND AND ALLOW SEDIMENT TO SEPARATE FROM RUNOFF.
2. SANDBAGS, OF EITHER BURLAP OR WOVEN GEOTEXTILE FABRIC, ARE FILLED WITH GRAVEL, LAYERED AND PACKED TIGHTLY.
3. LEAVE ONE SANDBAG GAP IN THE TOP ROW TO PROVIDE A SPILLWAY FOR OVERFLOW.
4. INSPECT BARRIERS AND REMOVED SEDIMENT AFTER EACH STORM EVENT. SEDIMENT AND GRAVEL MUST BE REMOVED FROM THE TRAVELED WAY IMMEDIATELY.

CURB INLET SEDIMENT BARRIER

ENGINEERING STANDARDS 2022

REVISIONS BY	REVISIONS DATE	ENGINEERING DIVISION CITY OF POMPANO BEACH	CURB INLET SEDIMENT BARRIER	
		SCALE: N.T.S.		DATE: MAY 2022 DWG. NO. 507-1

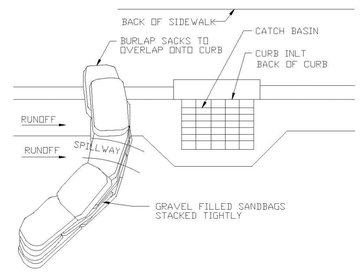

PLAN VIEW

NOTES:
1. PLACE CURB TYPE SEDIMENT BARRIERS ON GENTLY SLOPING STREET SEGMENTS, WHERE
2. WATER CAN POND AND ALLOW SEDIMENT TO SEPARATE FROM RUNOFF.
   SANDBAGS OF EITHER BURLAP OR WOVEN GEOTEXTILE FABRIC ARE FILLED WITH GRAVEL
3. LAYERED AND PACKED TIGHTLY.
4. LEAVE A ONE SANDBAG GAP IN THE TOP ROW TO PROVIDE A SPILLWAY FOR OVERFLOW.
   INSPECT BARRIERS AND REMOVED SEDIMENT AFTER EACH STORM EVENT. SEDIMENT AND GRAVEL MUST BE REMOVED FROM THE TRAVELED WAY IMMEDIATELY.

CURB AND GUTTER SEDIMENT BARRIER

ENGINEERING STANDARDS 2022

REVISIONS BY	REVISIONS DATE	ENGINEERING DIVISION CITY OF POMPANO BEACH	CURB AND GUTTER SEDIMENT BARRIER	
		SCALE: N.T.S.		DATE: MAY 2022 DWG. NO. 507-2

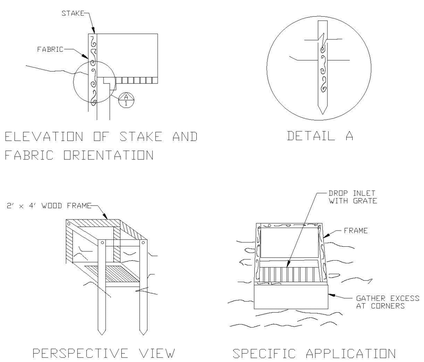

THIS METHOD OF INLET PROTECTION IS APPLICABLE WHERE THE INLET DRAINS A RELATIVELY FLAT AREA (SLOPE NO GREATER THAN 5%) WHERE THE INLET SHEET OR OVERLAND FLOWS (NOT EXCEDING 1 C.F.S.) ARE TYPICAL. THE METHOD SHALL NOT APPLY TO INLETS RECEIVING CONCENTRATED FLOWS, SUCH AS IN STREET OR HIGHWAY MEDIANS

FILTER FABRIC DROP INLET SEDIMENT FILTER

ENGINEERING STANDARDS 2022

REVISIONS BY	REVISIONS DATE	ENGINEERING DIVISION CITY OF POMPANO BEACH	FILTER FABRIC DROP INLET SEDIMENT FILTER	
		SCALE: N.T.S.		DATE: MAY 2022 DWG. NO. 508-1

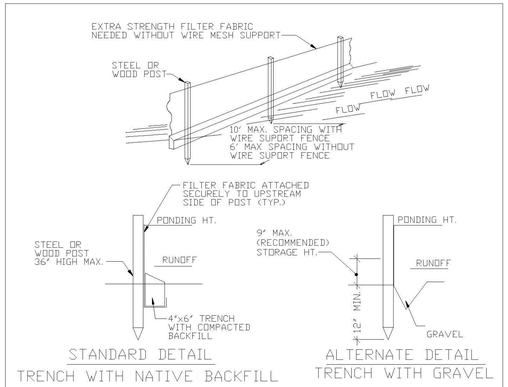

STANDARD DETAIL
TRENCH WITH NATIVE BACKFILL

ALTERNATE DETAIL
TRENCH WITH GRAVEL

SILT FENCE

EROSION CONTROL GENERAL NOTES

1. SILT FENCE AND TURBIDITY BARRIERS MUST REMAIN IN PLACE AND BE MAINTAINED AT ALL LOCATIONS SHOWN IN THE DRAWINGS UNTIL CONSTRUCTION ID COMPLETED AND SOILS ARE STABILIZED AND VEGETATION HAS BEEN.
2. CPMTRACTOR SHALL SUBMIT SCHEDULE FOR THE INSTALLATION, INSPECTION AND MAINTENANCE THE EROSION CONTROLS FEATURES AS SHOWN IN THE DRAWINGS OR AS DIRECTED BY THE DESIGN ENGINEER. THE SCHEDULE SHALL SPECIFICALLY SHALL SPECIFICALLY INDICATE THE SEQUENCE OF CLEARING, EARTH WORK OPERATIONS, AND WHEN THE EROSION CONTROL FEATURE WILL BE INSTALLED, INSPECTED, AND MAINTAINED. IT SHALL ALSO INCLUDE METHODS TO PREVENT POLLUTION OF STREAM, LAKES, TIDAL WATERS, CANALS, AND IMPOUNDMENTS. ESTABLISHED.

ENGINEERING STANDARDS 2022

REVISIONS BY	REVISIONS DATE	ENGINEERING DIVISION CITY OF POMPANO BEACH	SILT FENCE	
		SCALE: N.T.S.		DATE: MAY 2022 DWG. NO. 509-1

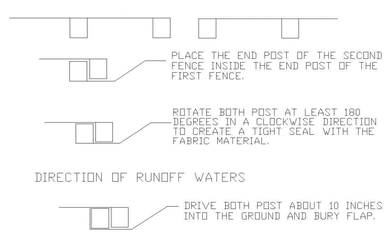

NOTES:
1. INSPECT AND REPAIR FENCE AFTER EACH STORM EVENT AND REMOVE SEDIMENT WHEN NECESSARY.
2. REMOVED SEDIMENT SHALL BE DEPOSITED TO AN AREA THAT WILL NOT CONTRIBUTE SEDIMENT OFF-SITE AND CAN BE PERMANENTLY STABILIZED.
3. SILT FENCE SHALL BE PLACED ON SLOPE CONTOURS TO MAXIMIZE PONDING EFFIFIENCY.

ATTACHING TWO SILT FENCES

ENGINEERING STANDARDS 2022

REVISIONS BY	REVISIONS DATE	ENGINEERING DIVISION CITY OF POMPANO BEACH	ATTACHING TWO SILT FENCES	
		SCALE: N.T.S.		DATE: MAY 2022 DWG. NO. 509-2

VERTICAL DATUM INFORMATION
ALL ELEVATIONS SHOWN ARE IN NORTH AMERICAN VERTICAL DATUM OF 1988 (NAVD88)

Sunshine 811
Call 811 or visit sunshine811.com two full business days before digging to have buried facilities located and marked.
Check positive response codes before you dig!

BID SET

cma
chen moore and associates
500 West Cypress Creek Road
Suite 600
Ft. Lauderdale, FL 33309
954.730.0707
www.chenmoore.com

REGISTRATION
DAVID EDGARDO CASTRO FELIU, PE
LICENSE NO. 85558
DATE: 11/08/24

DAVID EDGARDO CASTRO FELIU LICENSE No. 85558 STATE OF FLORIDA PROFESSIONAL ENGINEER

THIS SEAL IS ONLY VALID ON PRINTED COPIES THAT ARE DATED WITH THE LICENSEE'S ORIGINAL HAND SIGNATURE. SCANNED OR ELECTRONIC COPIES ARE NOT CONSIDERED SIGNED AND SEALED.

CLIENT
pompano beach
Florida's Warmest Welcome
CITY OF POMPANO BEACH
100 WEST ATLANTIC BOULEVARD
POMPANO BEACH, FL 33060
Phone: 954.786.4600

PROJECT INFORMATION

NON SEWER AREA C SANITARY SEWER IMPROVEMENTS

POMPANO BEACH, FL

PROJECT NUMBER 23-0092.00085
CLIENT PROJECT NUMBER P331425
VERIFY SCALES 0 — 1"
IF NOT ONE INCH ON THIS SHEET, ADJUST SCALES ACCORDINGLY
REVISIONS

DATE OF ISSUE 11/08/24
DESIGNED BY DC
DRAWN BY JT
CHECKED BY DC
DRAWING TITLE DETAILS

DRAWING NUMBER D-9
33 OF 43

Plot Date: 11/16/2024 12:18:06 AM Username: jspicer Layout Name: D-9
Folder Path: V:\Projects\2023\23-0092.00085 - area c sanitary sewer design services\Design\CAD\Sheets Filename: 23-0092.00085 Details.dwg

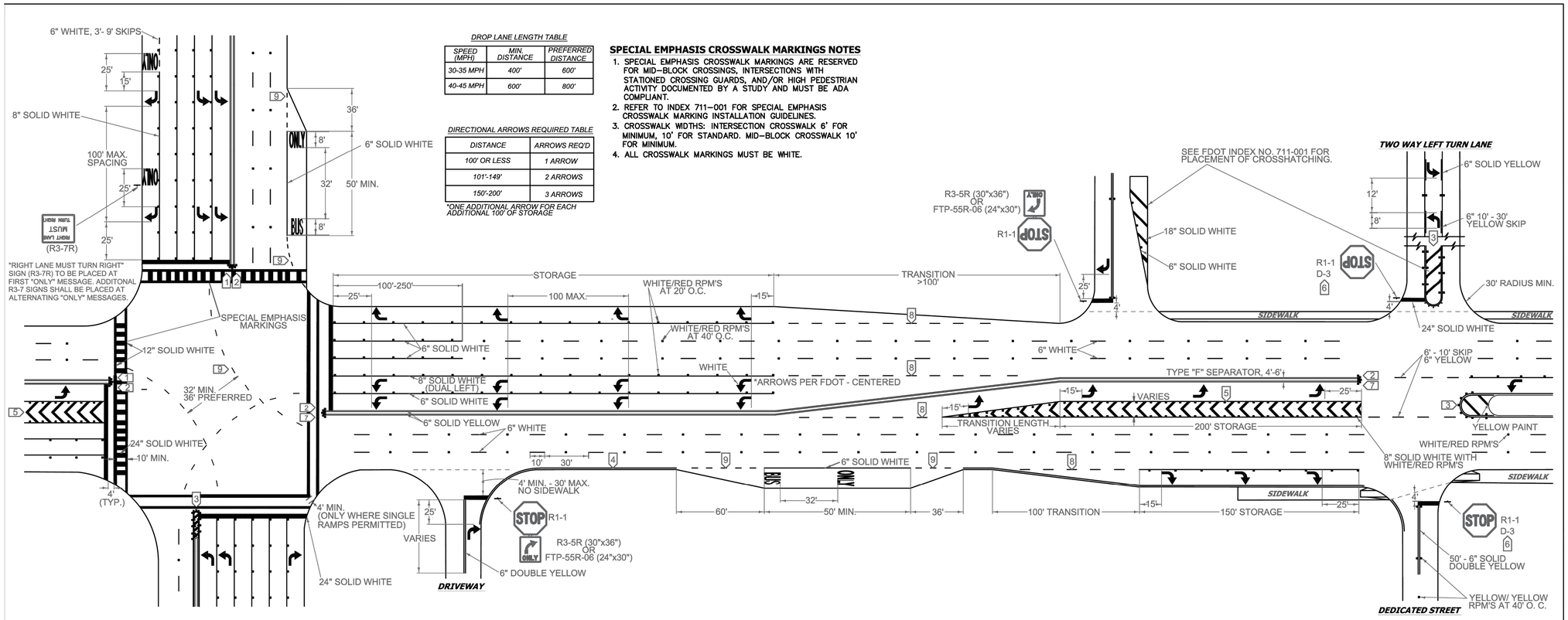

DROP LANE LENGTH TABLE

SPEED (MPH)	MIN. DISTANCE	PREFERRED DISTANCE
30-35 MPH	400'	600'
40-45 MPH	600'	800'

DIRECTIONAL ARROWS REQUIRED TABLE

DISTANCE	ARROWS REQ'D
100' OR LESS	1 ARROW
101'-149'	2 ARROWS
150'-200'	3 ARROWS

*ONE ADDITIONAL ARROW FOR EACH ADDITIONAL 100' OF STORAGE

SPECIAL EMPHASIS CROSSWALK MARKINGS NOTES

1. SPECIAL EMPHASIS CROSSWALK MARKINGS ARE RESERVED FOR MID–BLOCK CROSSINGS, INTERSECTIONS WITH STATIONED CROSSING GUARDS, AND/OR HIGH PEDESTRIAN ACTIVITY DOCUMENTED BY A STUDY AND MUST BE ADA COMPLIANT.
2. REFER TO INDEX 711–001 FOR SPECIAL EMPHASIS CROSSWALK MARKING INSTALLATION GUIDELINES.
3. CROSSWALK WIDTHS: INTERSECTION CROSSWALK 6' FOR MINIMUM, 10' FOR STANDARD. MID–BLOCK CROSSWALK 10' FOR MINIMUM.
4. ALL CROSSWALK MARKINGS MUST BE WHITE.

NOTES

1. ALL PAVEMENT MARKINGS SHALL BE ALKYD BASED THERMOPLASTIC AND FULLY RETROREFLECTORIZED.
2. ALL PAVEMENT MARKINGS ON PAVER SYSTEMS SHALL BE 3M 380/381 SERIES TAPE OR EQUIVALENT AND APPLIED WITH P60 ADHESIVE AS PER MANUFACTURERS SPECIFICATIONS.
3. ALL PAVEMENT MARKINGS AND SIGNING SHALL BE IN ACCORDANCE WITH THE "MANUAL ON UNIFORM TRAFFIC CONTROL DEVICES", BCTED STANDARDS, AND FDOT DESIGN STANDARDS.
4. SEE FDOT INDEX NO 706–001 FOR PLACEMENT OF RPM's (FOR BULLNOSE RPM TREATMENT, SEE LEGEND NO. 1)
5. RPM's SHALL BE CLASS "B" OR EQUIVALENT, APPLIED WITH EPOXY OR BITUMINOUS ADHESIVE.
6. FDOT APPROVED SEALER SHALL BE USED WHEN APPLYING MARKINGS ON CONCRETE.
7. FOR BIKE LANE DETAILS SEE FDOT INDEX NO. 711–002.
8. EXISTING MARKINGS SHALL BE REMOVED BY WATER BLASTING OR SAND BLASTING.
9. ALL STOP LINES TO BE 4' BEHIND CROSSWALK OR SIDEWALK.
10. PAVEMENT MARKING REFLECTIVITY SHALL BE UNIFORM ACROSS THE ENTIRE STRIPE AND SHALL HAVE A MINIMUM REFLECTIVITY READING OF 250 MILLICANDELAS FOR WHITE AND 175 MILLICANDELAS FOR YELLOW.
11. ALL PRODUCTS MUST BE ON FDOT'S APPROVED PRODUCTS LIST (APL).
12. RPMS SHALL NOT BE INSTALLED ADJACENT TO BIKE LANES.
13. LONGITUDINAL CROSSWALK MARKINGS SHALL BE INSTALLED AT ALL CROSS STREETS ON COUNTY ROADS THAT ARE FOUR LANES OR GREATER.

LEGEND

1 **YELLOW/YELLOW RPM DETAILS**

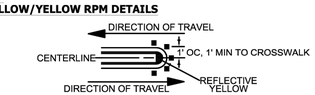

2 **MEDIAN NOSE PAINT DETAILS**

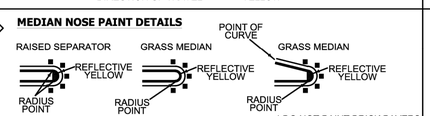

3 **PAINTED MEDIAN DETAILS**

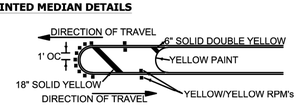

4 **EDGE LINE DETAILS**

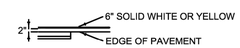

5 **CHEVRON DETAILS - CROSSWALK AREAS AND IN FRONT OF CURB RAMPS**

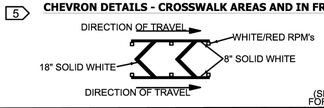

(SEE FDOT INDEX NO. 17346 FOR SPACING OF CHEVRONS)

6 **STREET NAME BLADE DETAILS**

SEE BCTED STOP SIGN AND STREET IDENTIFICATION ASSEMBLY TYPICAL DETAILS.

7 **TYPE IV SEPARATOR DETIALS**

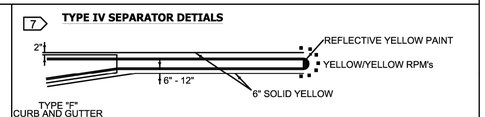

8 **6'-10' SKIP DETAILS**

6' - 10' SKIPS 6" WHITE SHALL BE USED FOR THE FOLLOWING CONDITIONS:

- TRANSITIONS AT ALL LEFT AND RIGHT TURN LANES

9 **2'-4' SKIP DETAILS**

2' - 4' SKIPS 6" WHITE SHALL BE USED FOR THE FOLLOWING CONDITIONS:

- RADIUS GUIDE LINES BETWEEN DUAL LEFTS TURN MOVEMENT (90' RADIUS PREFERRED OR AS NOTED ON PLANS)
- BUS BAY TRANSITIONS

STOP SIGN NOTE

WHERE SIDE ROADS INTERSECT A MULTI LANE STREET OR HIGHWAY THAT HAS A SPEED LIMIT OF 45 MPH OR HIGHER, THE MINIMUM SIZE OF THE STOP SIGNS FACING THE SIDE ROAD APPROACHES, EVEN IF THE SIDE ROAD ONLY HAS ONE APPROACH LANE, SHALL BE 36"X36".

WHERE SIDE ROADS INTERSECT A MULTI–LANE (INCLUDING TURN LANE) STREET OR HIGHWAY THAT HAS A SPEED LIMIT OF 40 MPH OR LOWER, THE MINIMUM SIZE OF THE STOP SIGN FACING THE SIDE ROAD APPROACHES SHALL BE 36"X36".

REVISIONS	
DATE	DESCRIPTION
11-24-2020	UPDATED NOTES
04-14-2021	UPDATED NOTES
05-06-2022	UPDATED NOTES

BROWARD COUNTY FLORIDA

PUBLIC WORKS DEPARTMENT
TRAFFIC ENGINEERING DIVISION

DESIGN BY: CARMELO CARATOZZOLO, P.E. | SCALE: NTS
DRAWN BY: STEPHON RAMOUTAR
CHECKED BY: CARMELO CARATOZZOLO, P.E.

PAVEMENT MARKINGS AND SIGNS DETAILS

SHEET NO.
1 OF 1

VERTICAL DATUM INFORMATION
ALL ELEVATIONS SHOWN ARE IN NORTH AMERICAN VERTICAL DATUM OF 1988 (NAVD88)

Sunshine 811
Call 811 or visit sunshine811.com two full business days before digging to have buried facilities located and marked.
Check positive response codes before you dig!

BID SET

cma
chen moore and associates
500 West Cypress Creek Road
Suite 600
Ft. Lauderdale, FL 33309
954.730.0707
www.chenmoore.com

REGISTRATION
DAVID EDGARDO CASTRO FELIU, PE
LICENSE NO. 85558
DATE: 11/08/24

DAVID EDGARDO CASTRO FELIU LICENSE No. 85558 STATE OF FLORIDA PROFESSIONAL ENGINEER

THIS SEAL IS ONLY VALID ON PRINTED COPIES THAT ARE DATED WITH THE LICENSEE'S ORIGINAL HAND SIGNATURE. SCANNED OR ELECTRONIC COPIES ARE NOT CONSIDERED SIGNED AND SEALED.

CLIENT
pompano beach
Florida's Warmest Welcome
CITY OF POMPANO BEACH
100 WEST ATLANTIC BOULEVARD
POMPANO BEACH, FL 33060
Phone: 954.786.4600

PROJECT INFORMATION

NON SEWER AREA C SANITARY SEWER IMPROVEMENTS

POMPANO BEACH, FL

PROJECT NUMBER
23-0092.00085

CLIENT PROJECT NUMBER
P331425

VERIFY SCALES
0 1"
IF NOT ONE INCH ON THIS SHEET, ADJUST SCALES ACCORDINGLY

REVISIONS

DATE OF ISSUE
11/08/24

DESIGNED BY
DC

DRAWN BY
JT

CHECKED BY
DC

DRAWING TITLE
DETAILS

DRAWING NUMBER
D-10
34 OF 43

Plot Date: 11/16/2024 12:18:11 AM Username: jspicer Layout Name: D-10
Folder Path: V:\Projects\2023\23-0092.00085 - area c sanitary sewer design services\Design\CAD\Sheets Filename: 23-0092.00085 Details.dwg

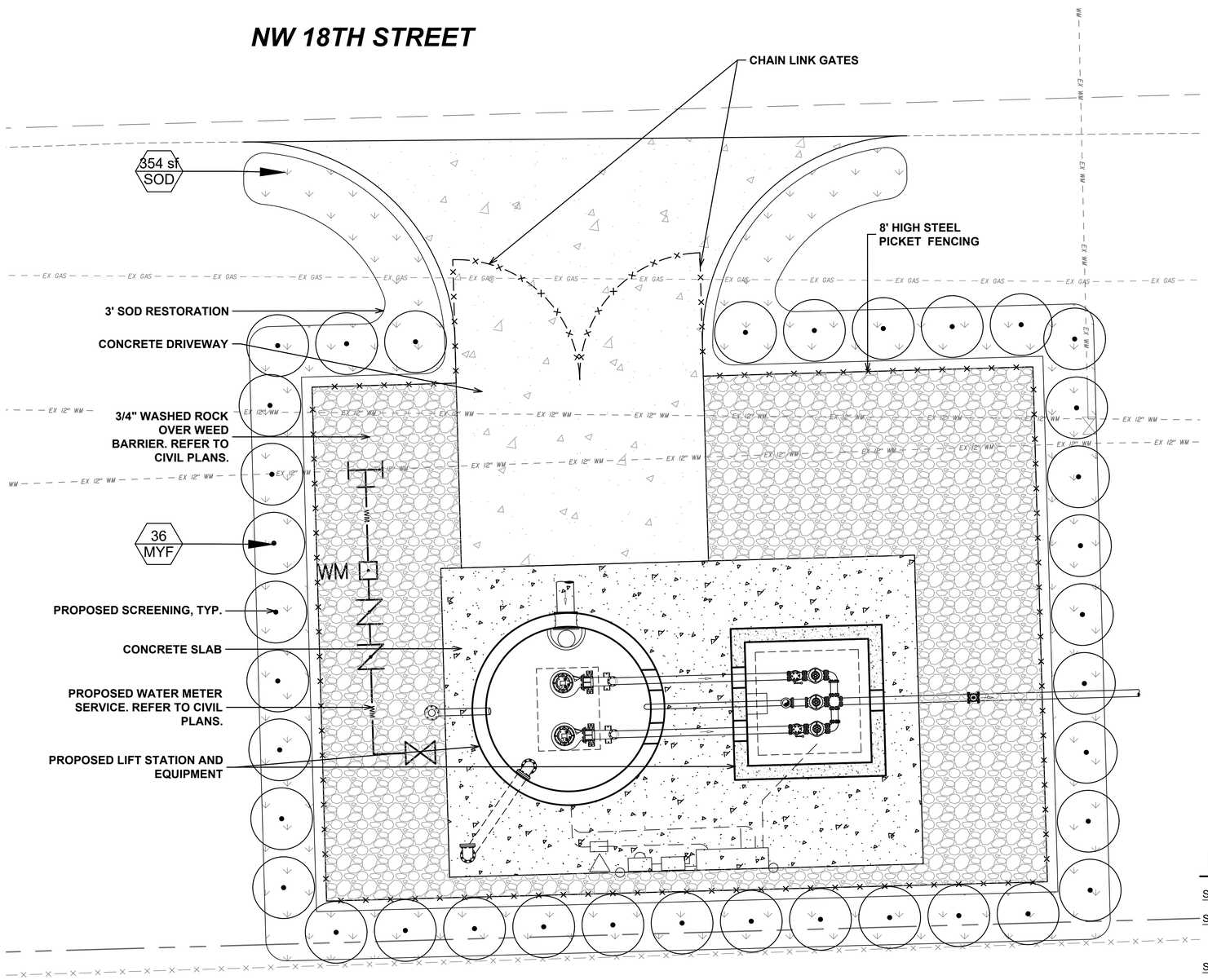

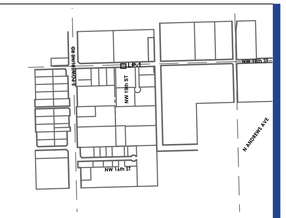

N

GRAPHIC SCALE

0 0.75 3 6

1 INCH = 3 FEET

PLANT SCHEDULE

SYMBOL	CODE	QTY	COMMON NAME	BOTANICAL NAME	CONT	SIZE	NATIVE	SPACING
SHRUBS								
	MYF	36	Simpson's Stopper	Myrcianthes fragrans	See Size	6` OAH	Yes	36" o.c.

SYMBOL	CODE	QTY	COMMON NAME	BOTANICAL NAME	CONT	SIZE	NATIVE
GROUND COVERS							
	SOD	354 sf	Bahiagrass	Paspalum notatum 'Argentine'	Sod		

VERTICAL DATUM INFORMATION
ALL ELEVATIONS SHOWN ARE IN NORTH AMERICAN VERTICAL DATUM OF 1988 (NAVD88)

Sunshine 811
Call 811 or visit sunshine811.com two full business days before digging to have buried facilities located and marked.
Check positive response codes before you dig!

100% CONSTRUCTION DOCUMENTS

cma
chen moore and associates
500 West Cypress Creek Road
Suite 600
Ft. Lauderdale, FL 33309
954.730.0707
www.chenmoore.com

REGISTRATION
DATE: 05-24-2024
NAME: ERIC D. HARRISON, RLA
Fl. REGISTRATION No. 6667129

ERIC DOUGLAS HARRISON
No. 6667129
STATE OF FLORIDA
LANDSCAPE ARCHITECT

This item has been digitally signed and sealed by **ERIC D. HARRISON, RLA,** on the date adjacent to the seal.

Printed copies of this document are not considered signed and sealed and the signature must be verified on any electronic copies.

CLIENT
pompano beach
Florida's Warmest Welcome
CITY OF POMPANO BEACH
100 WEST ATLANTIC BOULEVARD
POMPANO BEACH, FL 33060
Phone: 954.786.4600

PROJECT INFORMATION

NON SEWER AREA C SANITARY SEWER IMPROVEMENTS

POMPANO BEACH, FL

PROJECT NUMBER
23-0092.00085

CLIENT PROJECT NUMBER
P331425

VERIFY SCALES
0 1"
IF NOT ONE INCH ON THIS SHEET, ADJUST SCALES ACCORDINGLY

REVISIONS

DATE OF ISSUE
01/03/25

DESIGNED BY
ASC

DRAWN BY
ASC

CHECKED BY
EDH

DRAWING TITLE

LANDSCAPE PLAN

DRAWING NUMBER
LP-1
35 OF 43

Plot Date: 1/8/2025 6:11:19 PM Username: jspicer Layout Name: LP-1
Folder Path: V:\Projects\2023\23-0092.00085 - area c sanitary sewer design services\Design\CAD\Sheets Filename: 23-0092.00085 Landscape Plan.dwg

LANDSCAPE DETAILS

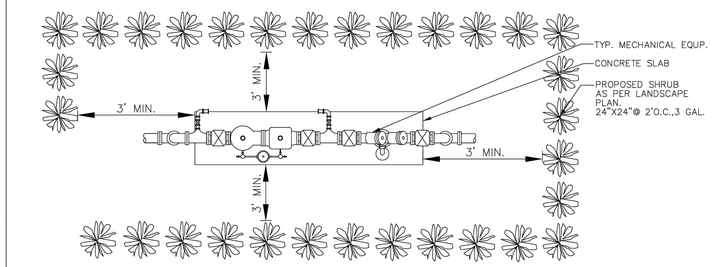

PLAN

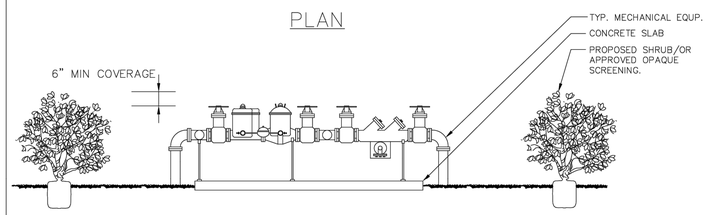

ELEVATION

TYPICAL SCREEN FOR UTILITIES

NOTES

PLEASE NOTE THAT AS PER CITY ORDINANCE(S) 50.02(A) (4) AND 100.35(E), STREET TREES SHALL NOT BE PLACED ON TOP OF OR 5' OF EITHER SIDE OF ANY CITY OWNED UTILITY INFRASTRUCTURE. ALSO, PLEASE NOTE THAT NO TREES SHRUBBERY OR OBSTRUCTION SHALL BE PLACED WITHIN A 3' RADIUS OF A CITY OWNED LATERAL CLEANOUT OR WATER & OR REUSE METER.

ENGINEERING STANDARDS 2022

REVISIONS				
BY	DATE	ENGINEERING DIVISION CITY OF POMPANO BEACH	TYPICAL SCREEN FOR UTILITIES	
TCW	APRIL 2010		APPROVED BY:	DATE: MAY 2022
		SCALE: N.T.S.		DWG. NO. 315-1

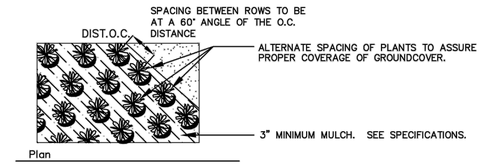

Plan

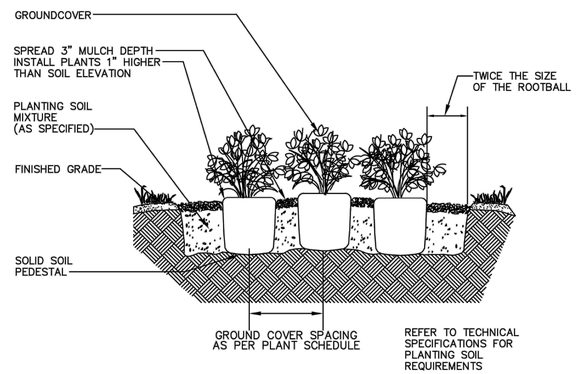

LANDSCAPE STANDARDS

REVISIONS				
BY	DATE	URBAN FORESTRY CITY OF POMPANO BEACH	GROUND COVER PLANTING DETAIL	
TCW	APRIL 2005		APPROVED BY:	DATE: MAY 2022
		SCALE: N.T.S.		DWG. NO. 201-1

VERTICAL DATUM INFORMATION
ALL ELEVATIONS SHOWN ARE IN NORTH AMERICAN VERTICAL DATUM OF 1988 (NAVD88)

Sunshine 811
Call 811 or visit sunshine811.com two full business days before digging to have buried facilities located and marked.
Check positive response codes before you dig!

100% CONSTRUCTION DOCUMENTS

cma
chen moore and associates
500 West Cypress Creek Road
Suite 600
Ft. Lauderdale, FL 33309
954.730.0707
www.chenmoore.com

REGISTRATION
DATE: 05-24-2024
NAME: ERIC D. HARRISON, RLA
Fl. REGISTRATION No. 6667129

ERIC DOUGLAS HARRISON
No. 6667129
STATE OF FLORIDA
LANDSCAPE ARCHITECT

This item has been digitally signed and sealed by **ERIC D. HARRISON, RLA,** on the date adjacent to the seal.

Printed copies of this document are not considered signed and sealed and the signature must be verified on any electronic copies.

CLIENT
pompano beach
Florida's Warmest Welcome
CITY OF POMPANO BEACH
100 WEST ATLANTIC BOULEVARD
POMPANO BEACH, FL 33060
Phone: 954.786.4600

PROJECT INFORMATION
NON SEWER AREA C SANITARY SEWER IMPROVEMENTS
POMPANO BEACH, FL

PROJECT NUMBER 23-0092.00085
CLIENT PROJECT NUMBER P331425
VERIFY SCALES 0 — 1"
IF NOT ONE INCH ON THIS SHEET, ADJUST SCALES ACCORDINGLY
REVISIONS

DATE OF ISSUE 05/21/2024
DESIGNED BY ASC
DRAWN BY ASC
CHECKED BY EDH
DRAWING TITLE
LANDSCAPE DETAILS
DRAWING NUMBER
LP-2
36 OF 43

Plot Date: 11/16/2024 12:19:18 AM Username: jspicer Layout Name: LP-2
Folder Path: V:\Projects\2023\23-0092.00085 - area c sanitary sewer design services\Design\CAD\Sheets Filename: 23-0092.00085 Landscape Plan.dwg

LANDSCAPE SPECIFICATIONS

1. GENERAL
   1.1. WORK PERFORMED SHALL COMPLY WITH THE FOLLOWING:
      1.1.1. THESE GENERAL NOTES, CONSTRUCTION DOCUMENTS AND SPECIFICATIONS.
      1.1.2. ALL APPLICABLE LOCAL, STATE AND FEDERAL CODES, ORDINANCES AND REGULATIONS.
   1.2. SOURCE OF BASE INFORMATION IS PROVIDED BY ROBERT D. KEENER PROFESSIONAL SURVEYOR AND MAPPER ON 12/10/2020 AND IS ASSUMED TO BE CORRECT. IF SITE DISCREPANCIES ARE PRESENT, CONTRACTOR SHALL NOTIFY OWNER'S REPRESENTATIVE IMMEDIATELY. IF CONTRACTOR CONTINUES WORK WITHOUT THE PROPER NOTIFICATION, CONTRACTOR DOES SO AT HIS OWN RISK.
   1.3. THE CONTRACTOR SHALL FURNISH ALL MATERIALS, LABOR, SUPERVISION, AND EQUIPMENT REQUIRED FOR THE WORK AS SHOWN ON THE CONSTRUCTION DOCUMENTS DESCRIBED HEREIN.
   1.4. CONTRACTOR SHALL BE RESPONSIBLE FOR ANY COORDINATION WITH SUB-CONTRACTORS AS REQUIRED TO COMPLETE THE WORK OF THIS PROJECT.
   1.5. CONTRACTOR SHALL VERIFY LOCATIONS OF PERTINENT SITE IMPROVEMENTS INSTALLED UNDER OTHER CONTRACTS. IF ANY PART OF THIS PLAN CANNOT BE FOLLOWED DUE TO SITE CONDITIONS, CONTACT OWNER'S REPRESENTATIVE FOR INSTRUCTIONS PRIOR TO COMMENCING WORK.
   1.6. CONTRACTOR TO NOTIFY "SUNSHINE STATE ONE CALL OF FLORIDA, INC." AT 1-800-432-4770 TWO FULL BUSINESS DAYS PRIOR TO DIGGING FOR UNDERGROUND UTILITY LOCATIONS.
   1.7. CONTRACTOR IS RESPONSIBLE FOR DETERMINING ALL UTILITY LOCATIONS AND INSTALLING FACILITIES SO AS TO NOT CONFLICT. THE LOCATION OF EXISTING UTILITIES OR SITE FEATURES AS SHOWN ON THE PLANS MAY VARY IN RELATION TO ACTUAL EXISTING CONDITIONS. ANY DIFFERING SITE CONDITIONS FROM THAT WHICH IS REPRESENTED HEREON, WHETHER ABOVE, ON OR BELOW THE SURFACE OF THE GROUND, SHOULD BE BROUGHT TO THE IMMEDIATE ATTENTION OF THE LANDSCAPE ARCHITECT AND THE OWNER IN WRITING. NO CLAIM FOR EXPENSES INCURRED BY THE CONTRACTOR DUE TO DIFFERING SITE CONDITIONS WILL BE ALLOWED IF THE CONTRACTOR FAILS TO PROVIDE THE REQUIRED WRITTEN NOTIFICATION OF SUCH CONDITIONS FOR REVIEW BY THE LANDSCAPE ARCHITECT AND THE OWNER.
   1.8. CONTRACTOR SHALL NOTIFY ALL APPROPRIATE UTILITY COMPANIES OF PROPOSED START OF WORK IN ACCORDANCE WITH THEIR STANDARD REQUIREMENTS, INCLUDING BUT NOT LIMITED TO, WATER, SANITARY SEWER, POWER, NATURAL GAS, TELEPHONE AND CABLE TV COMPANIES.
   1.9. IT SHALL BE THE CONTRACTOR'S SOLE RESPONSIBILITY TO TAKE THE NECESSARY PRECAUTIONS TO ENSURE PROPER SAFETY AND WORKMANSHIP WHEN WORKING IN THE VICINITY OF EXISTING UTILITY LINES.
   1.10. PERFORM EXCAVATION IN THE VICINITY OF UNDERGROUND UTILITIES WITH CARE AND BY HAND, IF NECESSARY. THE CONTRACTOR BEARS FULL RESPONSIBILITY FOR THIS WORK AND DISRUPTION OF DAMAGE TO UTILITIES SHALL BE REPAIRED IMMEDIATELY AND AT NO EXPENSE TO THE OWNER.
   1.11. THE SUCCESSFUL BIDDER SHALL FURNISH TO THE OWNER A UNIT PRICE BREAKDOWN FOR ALL MATERIALS. THE OWNER MAY, AT ITS DISCRETION, ADD OR DELETE FROM THE MATERIALS UTILIZING THE UNIT PRICE BREAKDOWN SUBMITTED.
   1.12. IT IS THE RESPONSIBILITY OF THE CONTRACTOR TO ENSURE THAT ALL REQUIRED PERMITS ARE OBTAINED AND ARE IN HAND AT THE JOB SITE PRIOR TO THE COMMENCEMENT OF CONSTRUCTION. CONTRACTOR SHALL ABIDE BY ALL PERMIT CONDITIONS.
2. PRE-CONSTRUCTION RESPONSIBILITY
   2.1. UPON RECEIPT OF NOTICE OF AWARD, THE CONTRACTOR SHALL ARRANGE A PRE-CONSTRUCTION CONFERENCE TO INCLUDE ALL INVOLVED GOVERNMENTAL AGENCIES, ALL AFFECTED UTILITY OWNERS, THE OWNER, THE LANDSCAPE ARCHITECT, ANY OTHER PERTINENT PARTIES AND HIMSELF.
   2.2. CONTRACTOR SHALL PROVIDE TEMPORARY SANITARY FACILITIES ONSITE. LOCATION TO BE DETERMINED BY THE OWNER. JANITORIAL SERVICES SHALL BE PROVIDED BY CONTRACTOR THROUGHOUT THE DURATION OF PROJECT.
   2.3. PRIOR TO BEGINNING CONSTRUCTION, THE CONTRACTOR SHALL VERIFY THE SIZE, LOCATION, ELEVATION, AND MATERIAL OF ALL EXISTING UTILITIES WITHIN THE AREA OF CONSTRUCTION.
   2.4. IF UPON EXCAVATION, AN EXISTING UTILITY IS FOUND TO BE IN CONFLICT WITH THE PROPOSED CONSTRUCTION OR TO BE OF A SIZE OR MATERIAL DIFFERENT FROM THAT SHOWN ON THE PLANS; THE CONTRACTOR SHALL IMMEDIATELY NOTIFY THE LANDSCAPE ARCHITECT.
   2.5. IT SHALL BE THE CONTRACTOR'S RESPONSIBILITY TO MAKE ARRANGEMENTS FOR THE FIELD LOCATIONS AND FOR ANY TREES PROPOSED FOR RELOCATION. THIS SHALL BE DONE IN A TIMELY MANNER TO MINIMIZE IMPACT ON CONSTRUCTION SCHEDULE. ANY DELAY CAUSED BY THE CONTRACTOR BY THE RELOCATION OF TREES SHALL BE INCIDENTAL TO THE CONTRACT AND NO EXTRA COMPENSATION WILL BE ALLOWED.
   2.6. CONTRACTOR SHALL VERIFY LIMITS OF CONSTRUCTION AS NOTED ON THE PLANS. ANY WORK PERFORMED OUTSIDE OF THE AGREED UPON LIMITS OF CONSTRUCTION SHALL BE DONE AT THE EXPENSE OF THE CONTRACTOR.
3. SITE DEMOLITION
   3.1. ITEMS SHALL REMAIN UNLESS OTHERWISE NOTED ON THE PLAN(S). REMOVE DESIGNATED ITEMS SHOWN ON THE PLAN TO THE FULL DEPTH OF THEIR CONSTRUCTION UNLESS OTHERWISE NOTED.
   3.2. ALL HARDSCAPE DESIGNATED FOR REMOVAL SHALL BE SAW CUT, LEAVING UNIFORM EDGES TO THE GREATEST EXTENT POSSIBLE. MATERIAL EDGES TO REMAIN SHALL BE SHORED UP AND PROTECTED DURING CONSTRUCTION TO PRESERVE EDGE INTACT. REPAIRS TO DAMAGED EDGES SHALL BE REPAIRED BY CONTRACTOR AT NO ADDITIONAL COST TO THE OWNER.
   3.3. NO EXISTING MATERIAL SHALL BE USED IN NEW CONSTRUCTION UNLESS NOTED ON THE PLANS OR APPROVED DURING THE SHOP DRAWING APPROVAL PROCESS.
   3.4. SALVAGE EXISTING MATERIALS AS INDICATED ON THE PLANS. SALVAGED MATERIALS SHALL BE HANDLED WITH CARE AND STORED ON-SITE OR AS DIRECTED BY OWNER. CLEAN ALL DEBRIS AND CONSTRUCTION MATERIAL FROM SALVAGED ITEMS; REUSE AS DIRECTED BY OWNER'S REPRESENTATIVE.
   3.5. REMOVE DEMOLISHED MATERIALS FROM SITE AND DISPOSE OF AS REQUIRED BY LOCAL, STATE OR FEDERAL LAWS.
   3.6. CONTRACTOR SHALL PROTECT ADJACENT WATER BODIES, COASTAL DUNE SYSTEMS AND PROPERTIES FROM DAMAGE BY SEDIMENTATION OR OTHER POTENTIAL CONSTRUCTION RELATED CAUSES.
   3.7. ALL IRRIGATION IN DEMOLITION AREA TO BE CAPPED AND ADJUSTED AS NECESSARY TO ENSURE OVERALL SYSTEM IS NOT AFFECTED.
4. TREE PRESERVATION
   4.1. ALL TREES TO BE PRESERVED AS INDICATED ON THE TREE DISPOSITION PLAN SHALL BE PROTECTED BY A TREE PROTECTION BARRICADE, UNLESS OTHERWISE NOTED ON PLAN.
   4.2. TREE PROTECTION BARRICADES SHALL BE PROVIDED BY LANDSCAPE CONTRACTOR AROUND THE DRIP LINE OF EXISTING TREES TO BE PRESERVED IN PLACE, AS SHOWN ON PLAN. PRESERVATION BARRICADES SHALL BE LEFT IN PLACE THROUGHOUT DURING ALL PHASES OF CONSTRUCTION.
   4.3. PRIOR TO ANY CONSTRUCTION A TREE PROTECTION BARRICADE INSPECTION SHALL BE CONDUCTED BY THE LANDSCAPE ARCHITECT, OWNER OR GOVERNING MUNICIPALITY. REFER TO PLANS FOR TREE PRESERVATION BARRICADE FENCING DETAIL.
   4.4. IF EXCAVATION IN THE VICINITY OF A PROTECTED TREE IS REQUIRED, CONTRACTOR SHALL ROOT PRUNE TREES, UNDER THE SUPERVISION OF A CERTIFIED ARBORIST IN ACCORDANCE TO THE FOLLOWING CONDITIONS:
      4.4.1. ROOT PRUNE TREES A MINIMUM OF EIGHT (8) WEEKS PRIOR TO CONSTRUCTION. PRIOR TO ROOT PRUNING, THOROUGHLY WATER THE ROOT ZONE WITH AT LEAST 2 TO 3 INCHES OF WATER FOR 2 TO 3 DAYS PRIOR TO ROOT PRUNING. SEE BELOW FOR RELOCATION TIMELINE.
         1. PROVIDE TEMPORARY IRRIGATION FOR EACH TREE THROUGHOUT THE DURATION OF CONSTRUCTION.
         2. ROOT PRUNE TREES, SHOWN ON PLAN IN AREAS WHERE ROOTS WILL CONFLICT WITH CONSTRUCTION ACTIVITY. PRUNING OF ROOTS SHOULD BE DONE IN A MANNER TO PRESERVE THE GREATEST AMOUNT OF THE ROOT BASE AS POSSIBLE.
         3. BACKFILL TRENCH WITH PLANTING SOIL.
         4. FERTILIZE WITHIN THE ROOT ZONE (SEE BELOW).
      4.4.2. ROOT PRUNING SHALL BE ACCOMPLISHED BY DIGGING A TRENCH AROUND THE TREE IN AREAS WHERE PROPOSED SITE WORK WILL BE PERFORMED. TRENCHING SHALL BE AT A MINIMUM OF 24" DEEP. ROOT PRUNE ONLY WITH A MECHANICAL ROOT-PRUNING SAW OR A TRENCHER WITH A MAXIMUM TRENCH WIDTH OF 8'.
      4.4.3. ALL EXPOSED ROOTS SHALL BE CUT OFF SMOOTHLY, WITH SHARP INSTRUMENTS. BACKFILL TRENCHES WITH SOIL CONSISTING OF 30% SILICA SAND AND 70% MUCK. WATER THOROUGHLY AFTER ROOT PRUNING, AND ONCE WEEKLY DURING THE ROOT REGENERATION PERIOD, WITH A SOLUBLE FERTILIZER THAT HAS A 20.20.20 ANALYSIS AT MANUFACTURER'S RECOMMENDED RATE.
   4.5. THE CONTRACTOR SHALL FIELD STAKE THE LIMIT OF ROOT PRUNING. LIMITS OF ROOT PRUNING SHALL BE APPROVED BY THE LANDSCAPE ARCHITECT PRIOR TO ANY EXCAVATION. DO NOT ROOT PRUNE FOR IRRIGATION OR ELECTRICAL LINES WITHIN DRIP LINES OF EXISTING TREES. COORDINATE ALL TRENCHING REQUIRED FOR UTILITY WORK WITH THE LANDSCAPE PLANS.
   4.6. ROOT PRUNING SHALL OCCUR IN ACCORDANCE WITH TREE RELOCATION NOTES AS NOTED ON PLANS.
5. PLANTING SOIL
   5.1. ALL TREES SHALL BE PLANTED WITH A MINIMUM OF 12" TOPSOIL AROUND AND BENEATH THE ROOTBALL.
   5.2. ALL TREES SHALL BE PLANTED WITH A MINIMUM OF 6" TOPSOIL AROUND AND BENEATH THE ROOTBALL.
   5.3. MINIMUM TOPSOIL SHALL BE 2" FOR SODDED GRASS AREAS.
   5.4. PLANTING SOIL MIX SHALL BE A WEED FREE MIX AS FOLLOWS:
      5.4.1. DICOT TREES & SHRUBS: 50% SAND, 40% MUCK & 10% PEAT
      5.4.2. MONOCOT PALMS: 70% SAND & 30% MUCK
      5.4.3. TURF: 80% SAND, 10% PEAT & 10% MUCK
6. LANDSCAPE PLANTING
   6.1. THIS PLAN HAS BEEN DESIGNED TO MEET OR EXCEED ALL APPLICABLE CODES.
   6.2. THE PLANTING PLAN SHALL BE INSTALLED IN COMPLIANCE WITH ALL EXISTING CODES AND APPLICABLE DEED RESTRICTIONS.
   6.3. PLANT MATERIAL: ALL PLANT MATERIAL SHALL BE FLORIDA #1 OR BETTER AS ESTABLISHED BY "GRADES AND STANDARDS FOR NURSERY PLANTS" OF THE STATE OF FLORIDA, DEPARTMENT OF AGRICULTURE.
   6.4. ALL PLANT MATERIAL SHALL BE TRUE TO THE BOTANICAL NAME, GENUS, SPECIES AND/OR HYBRID DESIGNATION.
   6.5. ALL TREES, SHRUBS AND GROUNDCOVERS SHALL BE OF THE SIZES (HEIGHT & SPREAD) AS SPECIFIED IN THE PLANT LIST. CONTAINER SIZE IS FOR REFERENCE PURPOSES ONLY. ALL PLANT MATERIAL SHALL MEET OR EXCEED THE MINIMUM SIZES AT INSTALLATION, AS SPECIFIED IN THE PLANT LIST.
   6.6. QUANTITIES LISTED ON THE PLANT LIST ARE FOR ESTIMATING PURPOSES. CONTRACTOR SHALL VERIFY ALL QUANTITIES. MULCH, TOPSOIL, FERTILIZER, ETC. SHALL BE INCLUDED IN THE UNIT COST OF THE PLANTS.
   6.7. WHERE THERE IS A DISCREPANCY EITHER IN QUANTITIES, PLANT NAMES, SIZES OR SPECIFICATIONS BETWEEN THE PLAN OR PLANT LIST, THE PLAN TAKES PRECEDENCE.
   6.8. ALL SUBSTITUTIONS AND CHANGES SHALL BE APPROVED IN WRITING PRIOR TO INSTALLATION. ANY DISCREPANCIES BETWEEN PLANS, SITE AND SPECIFICATIONS SHALL BE BROUGHT TO THE IMMEDIATE ATTENTION OF THE LANDSCAPE ARCHITECT, THE OWNER AND/OR GOVERNING MUNICIPALITY.
   6.9. CONTRACTOR SHALL BE RESPONSIBLE FOR PROVIDING FINAL GRADING OF ALL ASSOCIATED PLANTING AREAS.
   6.10. AFTER FINAL GRADE, LANDSCAPE AREAS ARE TO BE RAKED TO A DEPTH OF 6". ALL ROCK AND FOREIGN INORGANIC MATERIALS SHALL BE REMOVED AND DISPOSED OF PROPERLY OFF-SITE.
   6.11. ALL PLANTING HOLES TO BE HAND DUG EXCEPT WHERE MACHINE DUG HOLES WILL NOT ADVERSELY AFFECT EXISTING TREES, DAMAGE UTILITIES OR OTHER IMPROVEMENTS.
   6.12. ALL PLANTING BEDS IN OPEN AREAS AND AROUND BUILDING FOUNDATIONS SHALL BE EXCAVATED TO A DEPTH OF TWENTY-FOUR INCHES (24") AND BACK FILLED WITH SOIL MIX AS SPECIFIED IN SECTION 5.00. PLANTING BED SHALL BE FREE FROM ROCK, CONSTRUCTION DEBRIS OR OTHER EXTRANEOUS MATERIAL.
   6.13. ALL PLANTING BEDS IN MEDIANS, HARDSCAPE AREAS OR AREAS ENCOMPASSED BY IMPERVIOUS MATERIAL SHALL BE EXCAVATED TO A DEPTH OF THIRTY-SIX INCHES (36") OR UNTIL NATIVE SOILS ENCOUNTERED TO ENSURE DRAINAGE. BACK FILL WITH SOIL MIX AS SPECIFIED IN SECTION 5.00. PLANTING BED SHALL BE FREE FROM ROCK, CONSTRUCTION DEBRIS OR OTHER EXTRANEOUS MATERIAL.
   6.14. EXCAVATE PLANTING PITS TO A DEPTH SO THAT THE TRUNK FLARE AND FIRST ORDER LATERAL ROOT(S) WILL BE PLANTED AT FINISH GRADE OR SLIGHTLY HIGHER. ADVENTITIOUS ROOTS ARE NOT CONSIDERED FIRST ORDER ROOTS.
   6.15. BURLAP, SYNTHETIC STRING, CORDS AND/OR LIFTING ROPES SHALL BE REMOVED FROM THE ROOTBALLS BEFORE ANY TREES ARE PLANTED. THE TOP 1/3RD OF BURLAP MUST BE REMOVED FROM HE TOP OF THE ROOTBALLS. THE TOP 1/3RD OF WIRE BASKETS SHALL BE COMPLETELY REMOVED AND THE BOTTOM 2/3RDS SHALL BE CUT BEFORE THE TREES ARE INSTALLED.
   6.16. NO PLUNGING OF ANY TREE OR PALM WILL BE ACCEPTED.
   6.17. NO PLANT MATERIAL WILL BE ACCEPTED SHOWING EVIDENCE OF CABLE, CHAIN MARKS, EQUIPMENT SCARS, OR OTHERWISE DAMAGED.
   6.18. PLANT MATERIAL WILL NOT BE ACCEPTED WHEN THE BALL OF EARTH SURROUNDING ITS ROOTS HAS BEEN CRACKED, BROKEN OR OTHERWISE DAMAGED.
   6.19. ALL TREES SPECIFIED AS FIELD GROWN OR B&B TREES SHALL BE ROOT-PRUNED AT THE NURSERY A MINIMUM OF (8) WEEKS PRIOR TO PLANTING.
   6.20. ALL PLANT MATERIAL PLANTED WITHIN THE SIGHT DISTANCE TRIANGLE AREAS SHALL BE MAINTAINED TO PROVIDE UNOBSTRUCTED CROSS-VISIBILITY AT A HORIZONTAL LEVEL BETWEEN 30 INCHES AND 8 FEET ABOVE ADJACENT STREET GRADE.
   6.21. NO CANOPY TREES SHALL BE PLANTED WITHIN 12 FEET OF A LIGHT POLE. NO PALM SPECIES SHALL BE PLANTED WITHIN 6 FEET OF A LIGHT POLE.
   6.22. GROUND COVER PLANTINGS SHALL PROVIDE NOT LESS THAN 50 PERCENT COVERAGE IMMEDIATELY UPON PLANTING AND 100 PERCENT COVERAGE WITHIN 6 MONTHS AFTER PLANTING.
   6.23. TREES AND PALMS SHALL BE MAINTAINED TO ALLOW FOR CLEAR PASSAGE 8' IN ALL PEDESTRIAN AREAS.
   6.24. ALL LANDSCAPE MATERIAL SHALL BE SETBACK A MINIMUM OF 10' FROM ANY FIRE HYDRANT.
   6.25. CONTRACTOR SHALL REMOVE ALL NURSERY STAKES, CONDUIT, FLAGGING AND NURSERY TAPE PRIOR TO STAKING.
   6.26. CONTRACTOR SHALL STAKE & GUY ALL TREES AND PALMS AT TIME OF PLANTING AS PER THE APPROPRIATE DETAIL. CONTRACTOR IS RESPONSIBLE FOR THE MAINTENANCE AND/OR REPAIR OF ALL STAKING AND GUYING DURING WARRANTY PERIOD AND REMOVAL & DISPOSAL OF STAKING AFTER ESTABLISHMENT/WARRANTY PERIOD.
   6.27. TREES THAT CANNOT STAND WITHOUT THE SUPPORT OF STAKES AND/OR GUYS SHALL BE REJECTED.
7. TURF GRASSES
   7.1. ALL AREAS NOT USED FOR BUILDINGS, VEHICULAR USE AREAS, WALKS OR PLANTING BEDS SHALL BE GRASSED. GRASSING SHALL EXTEND TO ANY ABUTTING STREET PAVEMENT EDGE AND TO THE MEAN WATERLINE OF ANY ABUTTING CANAL, LAKE OR WATERWAY. REFER TO PLANTING SCHEDULE FOR ESTIMATED QUANTITY AND SPECIES.
8. MULCH & FERTILIZER
   8.1. ALL PLANTING BEDS AND WATER BASINS FOR TREES SHALL BE COVERED WITH A 3" MINIMUM DEPTH OF SHREDDED FLORI-MULCH, MELALEUCA OR EUCALYPTUS MULCH GRADE 'B' OR BETTER, UNLESS OTHERWISE SPECIFIED.
   8.2. INDIVIDUAL TREES PLANTED IN LAWN AREAS SHALL BE MULCHED WITH A MINIMUM 3' DIAMETER MULCH RING.
   8.3. MULCH SHALL NOT BE INSTALLED WITHIN 3" OF TREE TUNKS.
   8.4. FERTILIZER MIX AS FOLLOWS:
      8.4.1. DICOT TREES & SHRUBS: NPK 18-4-2, SLOW RELEASE W/ MICRONUTRIENTS
      8.4.2. MONOCOT PALMS: NPK 8-2-12, SLOW RELEASE W/ MICRONUTRIENTS
      8.4.3. TURF: NPK 16-4-8, SLOW RELEASE W/ MICRONUTRIENTS
9. WATERING
   9.1. NO NEW IRRIGATION IS PROPOSED FOR THE PROPOSED LANDSCAPE RESTORATION. CONTRACTOR SHALL BE REQUIRED TO MODIFY THE EXISTING IRRIGATION SYSTEM TO ACCOMMODATE THE PROPOSED INFRASTRUCTURE IMPROVEMENTS.
   9.2. ALL LANDSCAPED AREAS NOTED ON PLANS (TREES, PALMS, SOD & RELOCATIONS) ARE REQUIRED TO BE WATERED IN BY METHODS SUCH AS, BUT NOT LIMITED TO HAND WATERING, WATER TRUCK, WATER BAGS, ETC. IF THERE IS NO EXISTING IRRIGATION PRESENT.
   9.3. ALL PLANT MATERIAL SHALL BE WATERED IN AT TIME OF PLANTING IN ACCORDANCE WITH STANDARD NURSERY PRACTICES. IN ADDITION, CONTRACTOR WILL CONTINUE THE WATERING OF PLANT MATERIAL THROUGH THE ESTABLISHMENT AND WARRANTY PERIOD, OR UNTIL RELEASED OF THE OBLIGATION BY THE OWNER, IN WRITING. A SUGGESTED SCHEDULE OF WATERING IS PROVIDED. CONTRACTOR SHALL ADJUST WATERING SCHEDULE AND VOLUME TO ACCOMMODATE SITE CONDITIONS, WEATHER CONDITIONS, SEASONAL WEATHER, ETC.
   9.4. ALL PLANT MATERIAL SHALL BE WATERED IN AT TIME OF PLANTING IN ACCORDANCE WITH STANDARD NURSERY PRACTICES. IN ADDITION, CONTRACTOR WILL CONTINUE THE WATERING OF PLANT MATERIAL UNTIL SUBSTANTIAL COMPLETION AND THE LANDSCAPE IS TURNED OVER TO THE OWNER.
   9.5. NO IRRIGATION IS PROPOSED FOR THE SCREENING HEDGE AS SHOWN. ALL SHRUBS ARE REQUIRED TO BE WATERED IN BY METHODS SUCH AS, BUT NOT LIMITED TO HAND WATERING, WATER TRUCK, WATER BAGS, ETC. ALL PLANT MATERIAL SHALL BE WATERED IN AT TIME OF PLANTINGS IN ACCORDANCE WITH STANDARD NURSERY PRACTICES. IN ADDITION, THE CONTRACTOR WILL CONTINUE THE WATERING OF PLANT MATERIAL THROUGH THE ESTABLISHMENT PERIOD, OR UNTIL RELEASED OF THE OBLIGATION BY THE OWNER, IN WRITING. CONTRACTOR TO PROVIDE A PROPOSED WATERING SCHEDULE FOR MATERIALS PROPOSED, INDICATING THE FREQUENCY AND VOLUME OF WATER PER TREE.
   9.6. FIELD ADJUST LOCATIONS AS REQUIRED TO ENSURE THERE ARE NO CONFLICTS WITH ABOVE GROUND OR BELOW GROUND APPURTENANCES. CONTRACTOR TO VERIFY LOCATIONS OF BELOW GRADE UTILITIES PRIOR TO INSTALLATION.
10. PROJECT CLOSEOUT
   10.1. DURING CONSTRUCTION, THE PROJECT SITE AND ALL ADJACENT AREAS SHALL BE MAINTAINED IN A NEAT AND CLEAN MANNER. UPON FINAL CLEAN UP, THE PROJECT SITE SHALL BE LEFT CLEAR OF ALL SURPLUS MATERIAL OR TRASH. THE PAVED AREAS SHALL BE SWEPT BROOM CLEAN.
   10.2. THE CONTRACTOR SHALL RESTORE, REPLACE OR AS DIRECTED BY THE LANDSCAPE ARCHITECT, ANY PUBLIC OR PRIVATE PROPERTY DAMAGED BY THE WORK OF THE CONTRACTOR, HIS EQUIPMENT, EMPLOYEES OR THOSE OF HIS SUB-CONTRACTORS. THIS WORK SHALL BE RESTORED TO A CONDITION EQUAL TO OR BETTER THAN THAT OF THE EXISTING ADJACENT AREAS. THE RESTORATION WORK SHALL BE AT THE CONTRACTOR'S EXPENSE. SUITABLE MATERIALS AND METHODS SHALL BE USED FOR SUCH RESTORATION.
   10.3. WHERE MATERIAL OR DEBRIS HAS WASHED OR FLOWED INTO OR BEEN PLACED IN WATER COURSES, DITCHES, DRAINS, CATCH BASINS, OR ELSEWHERE AS A RESULT OF THE CONTRACTOR'S OPERATIONS, SUCH MATERIAL OR DEBRIS SHALL BE REMOVED AND SATISFACTORILY DISPOSED OF DURING PROGRESS OF THE WORK. THESE AREAS SHALL BE KEPT IN A CLEAN AND NEAT CONDITION.
   10.4. THE CONTRACTOR SHALL MAINTAIN ACCURATE AND COMPLETE RECORDS OF WORK ITEMS COMPLETED.
   10.5. UPON COMPLETION OF CONSTRUCTION, THE CONTRACTOR SHALL SUBMIT TO THE LANDSCAPE ARCHITECT OF RECORD COMPLETE SETS OF "AS-BUILT" CONSTRUCTION DRAWINGS. THESE DRAWINGS SHALL BE MARKED TO SHOW "AS-BUILT" CONSTRUCTION CHANGES AND DIMENSIONED LOCATIONS AND ELEVATIONS OF ALL IMPROVEMENTS INCLUDING PRODUCT/EQUIPMENT AS SPECIFIED OR REVISED DURING THE SHOP DRAWING SUBMITTAL PROCESS. AS-BUILT DRAWINGS SHALL BE SIGNED AND SEALED BY A FLORIDA REGISTERED LAND SURVEYOR.
11. GUARANTEE
   11.1. ALL NEW PLANT MATERIAL SHALL BE GUARANTEED FOR 1 YEAR FROM TIME OF FINAL ACCEPTANCE OF PROJECT. ANY PLANT MATERIAL NOT IN A HEALTHY GROWING CONDITION WILL BE REPLACED IN KIND BY THE CONTRACTOR AT NO ADDITIONAL COST TO THE OWNER WITHIN 10 DAYS OF NOTIFICATION.
   11.2. FOR ALL REPLACEMENT PLANT MATERIAL, THE WARRANTY PERIOD SHALL BE EXTENDED AN ADDITIONAL 90 DAYS BEYOND THE ORIGINAL WARRANTY PERIOD. REPLACEMENT MATERIAL SHALL BE REPLACED IN KIND AS IT RELATES TO SPECIES, QUANTITY AND SIZE.
   11.3. ALL TREES THAT LEAN OR ARE BLOWN OVER, CAUSED BY WINDS LESS THAN 74 MPH AS DETERMINED BY THE NATIONAL HURRICANE CENTER, WILL BE RE-SET AND BRACED BY THE CONTRACTOR AT NO ADDITIONAL COST TO THE OWNER.

VERTICAL DATUM INFORMATION
ALL ELEVATIONS SHOWN ARE IN NORTH AMERICAN VERTICAL DATUM OF 1988 (NAVD88)

Sunshine811
Call 811 or visit sunshine811.com two full business days before digging to have buried facilities located and marked.
Check positive response codes before you dig!

100% CONSTRUCTION DOCUMENTS

cma
chen moore and associates
500 West Cypress Creek Road
Suite 600
Ft. Lauderdale, FL 33309
954.730.0707
www.chenmoore.com

REGISTRATION
DATE: **05-24-2024**
NAME: **ERIC D. HARRISON, RLA**
FL REGISTRATION No. **6667129**

ERIC DOUGLAS HARRISON
No. 6667129
STATE OF FLORIDA
LANDSCAPE ARCHITECT

This item has been digitally signed and sealed by **ERIC D. HARRISON, RLA**, on the date adjacent to the seal.

Printed copies of this document are not considered signed and sealed and the signature must be verified on any electronic copies.

CLIENT
pompano beach
Florida's Warmest Welcome
CITY OF POMPANO BEACH
100 WEST ATLANTIC BOULEVARD
POMPANO BEACH, FL 33060
Phone: 954.786.4600

PROJECT INFORMATION

NON SEWER AREA C SANITARY SEWER IMPROVEMENTS

POMPANO BEACH, FL

PROJECT NUMBER
23-0092.00085

CLIENT PROJECT NUMBER
P331425

VERIFY SCALES
0 — 1"
IF NOT ONE INCH ON THIS SHEET, ADJUST SCALES ACCORDINGLY

REVISIONS

DATE OF ISSUE
05/21/2024

DESIGNED BY
ASC

DRAWN BY
ASC

CHECKED BY
EDH

DRAWING TITLE

LANDSCAPE SPECIFICATIONS

DRAWING NUMBER
LP-3
37 OF 43

Plot Date: 11/16/2024 12:19:22 AM Username: jspicer Layout Name: LP-3
Folder Path: V:\Projects\2023\23-0092.00085 - area c sanitary sewer design services\Design\CAD\Sheets Filename: 23-0092.00085 Landscape Plan.dwg

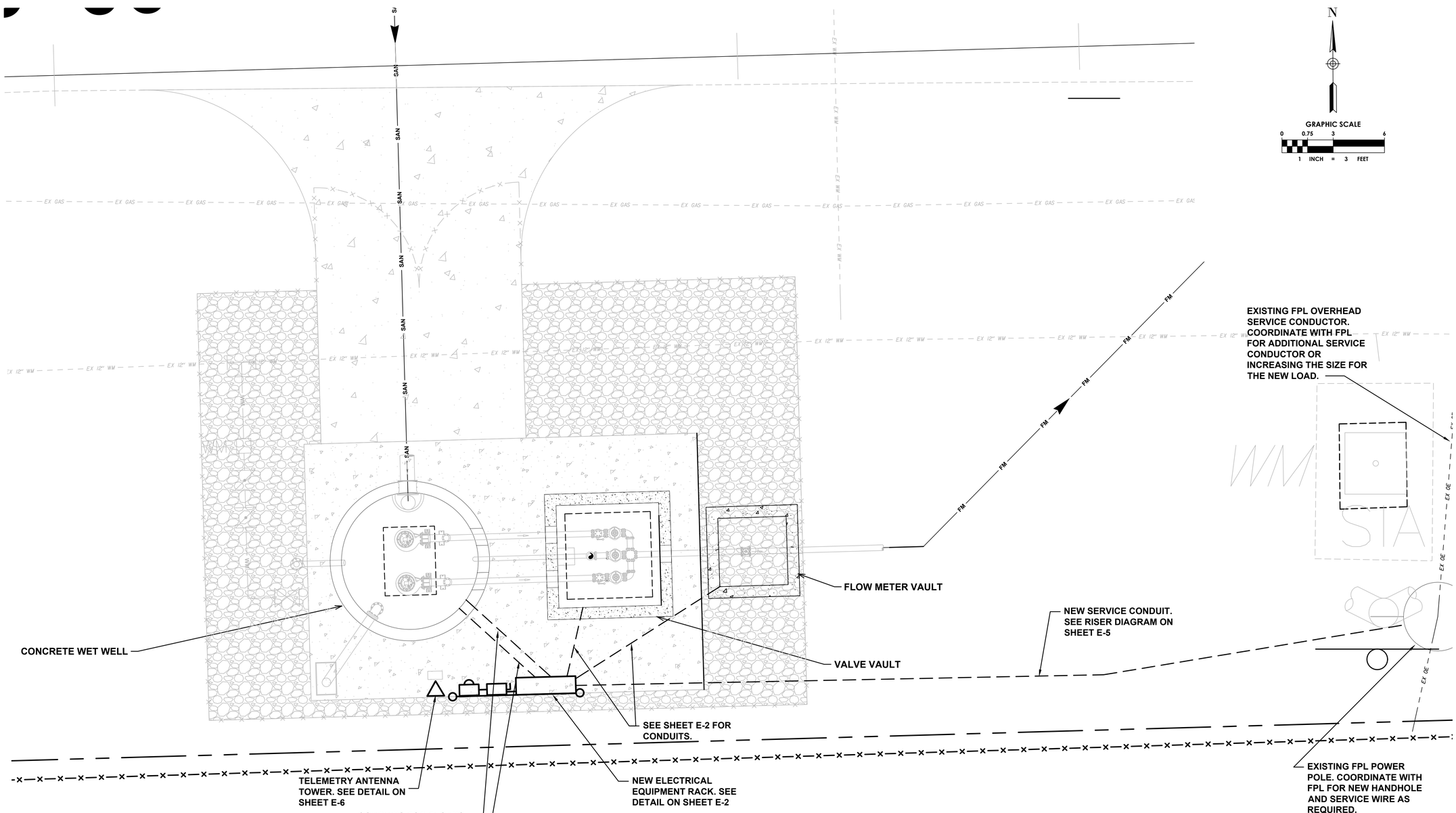

ELECTRICAL SITE PLAN

SCALE: 1"=3'-0"

VERTICAL DATUM INFORMATION
ALL ELEVATIONS SHOWN ARE IN NORTH AMERICAN VERTICAL DATUM OF 1988 (NAVD88)

Sunshine 811
Call 811 or visit sunshine811.com two full business days before digging to have buried facilities located and marked.
Check positive response codes before you dig!

BID SET

cma
chen moore and associates
500 West Cypress Creek Road
Suite 600
Ft. Lauderdale, FL 33309
954.730.0707
www.chenmoore.com

REGISTRATION
DAVID LARRY M. SMITH, PE
LICENSE NO. 45997
DATE: 1/17/2025

LARRY M. SMITH LICENSE No. 45997 STATE OF FLORIDA PROFESSIONAL ENGINEER

THIS SEAL IS ONLY VALID ON PRINTED COPIES THAT ARE DATED WITH THE LICENSEE'S ORIGINAL HAND SIGNATURE. SCANNED OR ELECTRONIC COPIES ARE NOT CONSIDERED SIGNED AND SEALED.

SEC Smith Engineering Consultants, Inc.
State Auth. #8228
2161 Palm Beach Lakes Blvd., Suite 312
West Palm Beach, Florida 33409
(561) 616-3911 fax (561) 616-3912
www.smithengineeringconsultants.com

CLIENT
pompano beach
Florida's Warmest Welcome
CITY OF POMPANO BEACH
100 WEST ATLANTIC BOULEVARD
POMPANO BEACH, FL 33060
Phone: 954.786.4600

PROJECT INFORMATION

NON SEWER AREA C SANITARY SEWER IMPROVEMENTS

POMPANO BEACH, FL

PROJECT NUMBER
23-0092.00085

CLIENT PROJECT NUMBER
P331425

VERIFY SCALES
0 1"
IF NOT ONE INCH ON THIS SHEET, ADJUST SCALES ACCORDINGLY

REVISIONS

DATE OF ISSUE
01/17/25

DESIGNED BY
SPH

DRAWN BY
SPH

CHECKED BY
LMS

DRAWING TITLE
LIFT STATION ELECTRICAL SITE PLAN

DRAWING NUMBER
E-1
35 OF 40

Plot Date: 1/17/2025 4:38:28 PM Username: Steve Layout Name: E-1
Folder Path: T:\SEC 2024\S24020 Chen-Moore- Pompano Beach, Non-Sewer Area C Lift Station\Electrical Dwgs\Sheets Filename: 23-0092.00085 Lift Station Plan-E-1.dwg

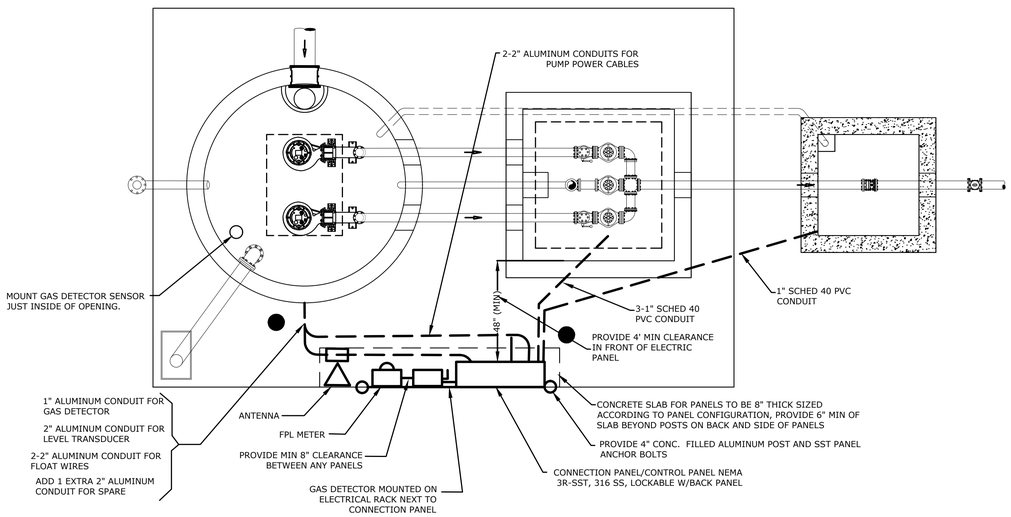

PLAN VIEW
NTS

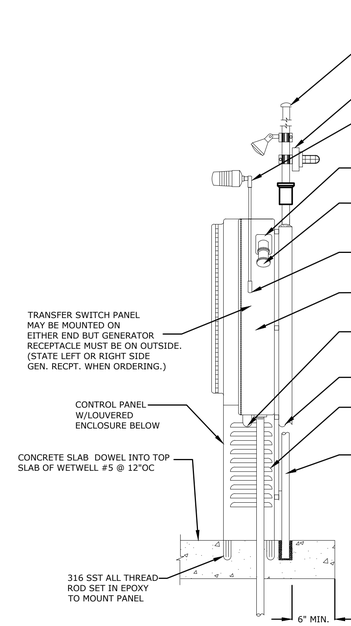

PANEL SIDE VIEW
NTS

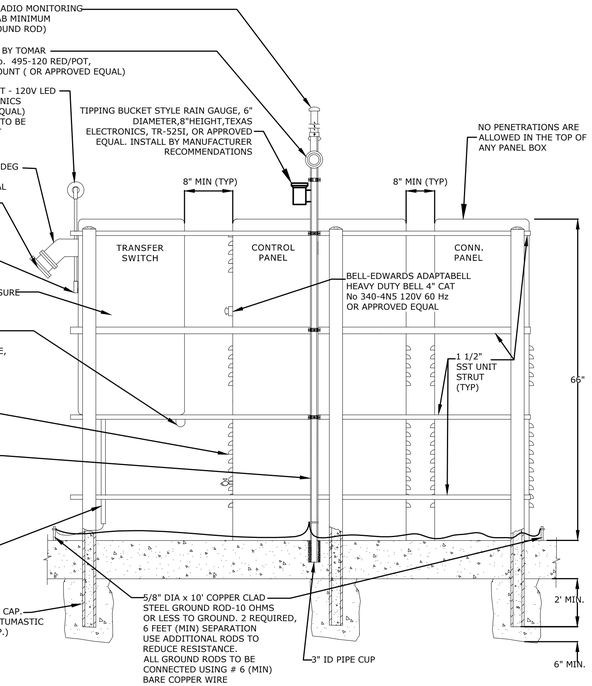

PANEL REAR VIEW
NTS

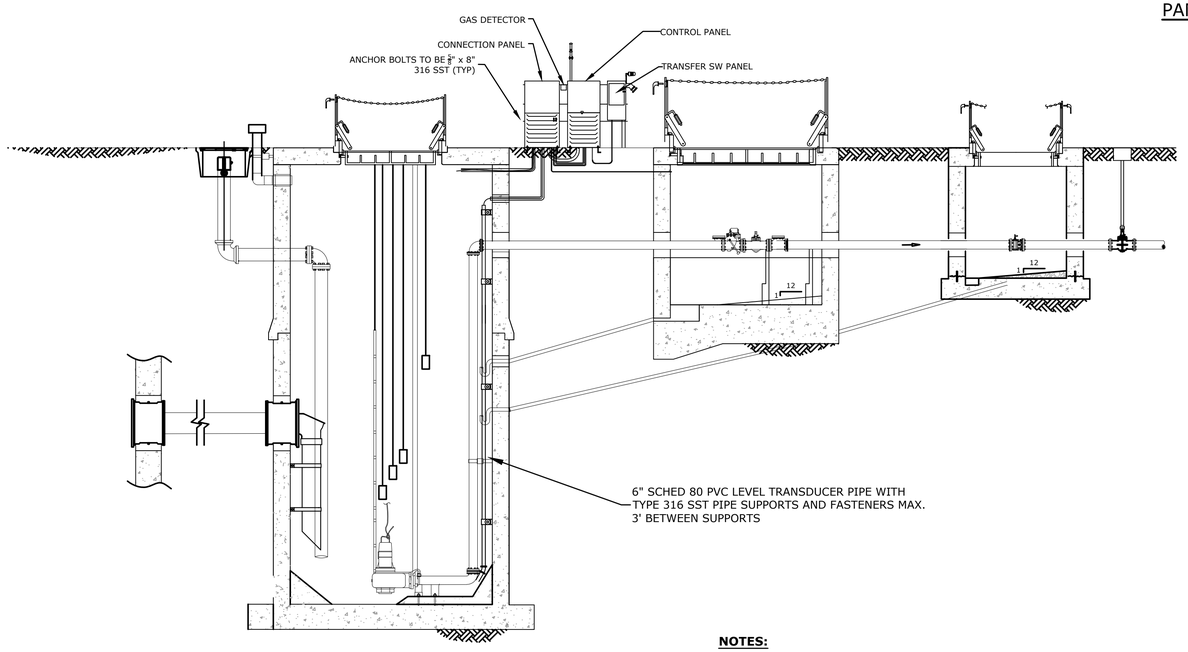

ELEVATION
NTS

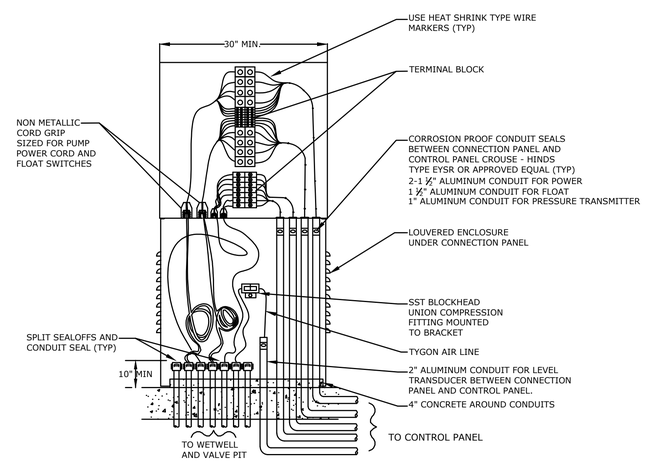

CONNECTION PANEL DETAIL
NTS

NOTES:

1. **AREA INSIDE WETWELL IS CONSIDERED A CLASS 1, DIVISION 2 AREA IN ACCORDANCE WITH THE NATIONAL ELECTRICAL CODE**
2. **ALL OTHER AREAS ARE NOT CLASSIFIED**
3. **NO PENETRATIONS SHALL BE PERMITTED IN THE TOP OF ANY PANEL BOX**
4. **APPLY TWO COATS OF BITUMASTIC PAINT TO ALL ALUUMINUM CONDUIT AND SUPPORT IN CONTACT WITH CONCRETE FLOOR SLABS TO A POINT 4 INCHES ABOVE CONCRETE SURFACE.**
5. **PROVIDE DUCT SEAL IN ALL CONDUITS.**

VERTICAL DATUM INFORMATION
ALL ELEVATIONS SHOWN ARE IN NORTH AMERICAN VERTICAL DATUM OF 1988 (NAVD88)

Sunshine811
Call 811 or visit sunshine811.com two full business days before digging to have buried facilities located and marked.
Check positive response codes before you dig!

BID SET

cma
chen moore and associates
500 West Cypress Creek Road
Suite 600
Ft. Lauderdale, FL 33309
954.730.0707
www.chenmoore.com

REGISTRATION
DAVID LARRY M. SMITH, PE
LICENSE NO. 45997
DATE: 1/17/2025

LARRY M. SMITH LICENSE No. 45997 STATE OF FLORIDA PROFESSIONAL ENGINEER

THIS SEAL IS ONLY VALID ON PRINTED COPIES THAT ARE DATED WITH THE LICENSEE'S ORIGINAL HAND SIGNATURE. SCANNED OR ELECTRONIC COPIES ARE NOT CONSIDERED SIGNED AND SEALED.

SEC Smith Engineering Consultants,Inc.
State Auth. #8228
2161 Palm Beach Lakes Blvd., Suite 312
West Palm Beach, Florida 33409
(561) 616-3911 fax (561) 616-3912
www.smithengineeringconsultants.com

CLIENT
pompano beach
Florida's Warmest Welcome
CITY OF POMPANO BEACH
100 WEST ATLANTIC BOULEVARD
POMPANO BEACH, FL 33060
Phone: 954.786.4600

PROJECT INFORMATION

NON SEWER AREA C SANITARY SEWER IMPROVEMENTS

POMPANO BEACH, FL

PROJECT NUMBER
23-0092.00085

CLIENT PROJECT NUMBER
P331425

VERIFY SCALES
0 1"
IF NOT ONE INCH ON THIS SHEET, ADJUST SCALES ACCORDINGLY

REVISIONS

DATE OF ISSUE
01/17/25

DESIGNED BY
SPH

DRAWN BY
SPH

CHECKED BY
LMS

DRAWING TITLE

ELECTRICAL PLAN AND DETAILS

DRAWING NUMBER
E-2
36 OF 40

Plot Date: 1/17/2025 6:02:58 PM Username: StevePHockman Layout Name: E-2
Folder Path: T:\SEC 2024\S24020 Chen-Moore - Pompano Beach, Non-Sewer Area C Lift Station\Electrical Dwgs\Sheets Filename: 23-0092.00085 Lift Station -E-2.dwg

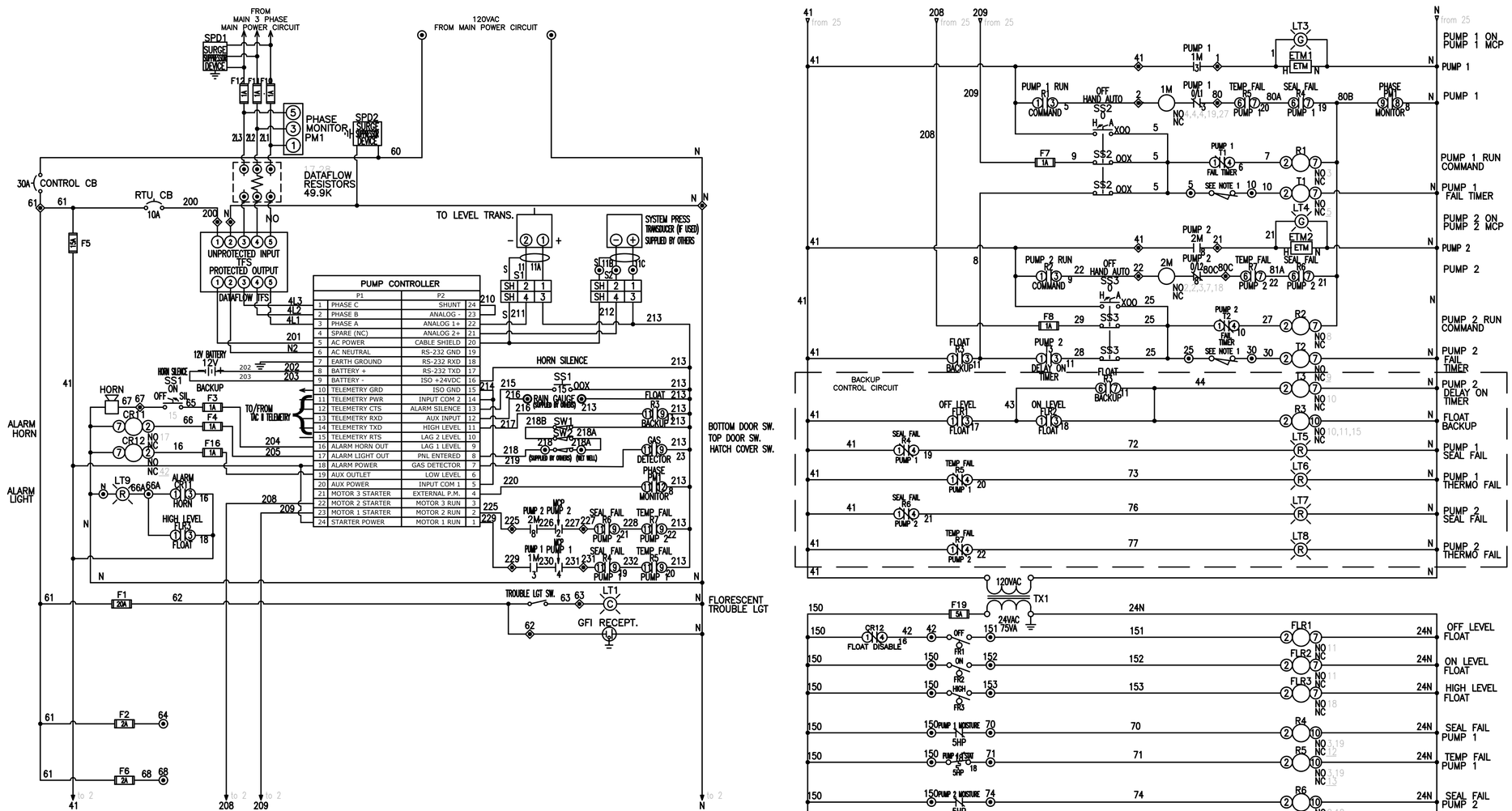

NOTE:
1. INTERLOCK SIGNAL FROM LEVER ARM OR PUMP CURRENT TRANSFORMER VIA PLC
2. ⊙ FIELD DEVICE TERMINALS (FDTB)
3. ◈ INTERNAL DIVICE TERMINALS (IDTB)

ELECTRICAL CONTROLS CIRCUIT (DUPLEX)

VERTICAL DATUM INFORMATION
ALL ELEVATIONS SHOWN ARE IN NORTH AMERICAN VERTICAL DATUM OF 1988 (NAVD88)

Sunshine 811
Call 811 or visit sunshine811.com two full business days before digging to have buried facilities located and marked.
Check positive response codes before you dig!

BID SET

cma
chen moore and associates
500 West Cypress Creek Road
Suite 600
Ft. Lauderdale, FL 33309
954.730.0707
www.chenmoore.com

REGISTRATION
DAVID LARRY M. SMITH, PE
LICENSE NO. 45997
DATE: 1/17/2025

LARRY M. SMITH LICENSE No. 45997 STATE OF FLORIDA PROFESSIONAL ENGINEER

THIS SEAL IS ONLY VALID ON PRINTED COPIES THAT ARE DATED WITH THE LICENSEE'S ORIGINAL HAND SIGNATURE. SCANNED OR ELECTRONIC COPIES ARE NOT CONSIDERED SIGNED AND SEALED.

SEC Smith Engineering Consultants, Inc.
State Auth. #8228
2161 Palm Beach Lakes Blvd., Suite 312
West Palm Beach, Florida 33409
(561) 616-3911 fax (561) 616-3912
www.smithengineeringconsultants.com

CLIENT
pompano beach
Florida's Warmest Welcome
CITY OF POMPANO BEACH
100 WEST ATLANTIC BOULEVARD
POMPANO BEACH, FL 33060
Phone: 954.786.4600

PROJECT INFORMATION
NON SEWER AREA
C SANITARY
SEWER
IMPROVEMENTS

POMPANO BEACH, FL

PROJECT NUMBER
23-0092.00085

CLIENT PROJECT NUMBER
P331425

VERIFY SCALES
0 — 1"
IF NOT ONE INCH ON THIS SHEET, ADJUST SCALES ACCORDINGLY

REVISIONS

DATE OF ISSUE
01/17/25

DESIGNED BY
SPH

DRAWN BY
SPH

CHECKED BY
LMS

DRAWING TITLE
DUPLEX CONTROLS

DRAWING NUMBER
E-3
37 OF 40

Plot Date: 1/17/2025 6:07:46 PM Username: StevePHockman Layout Name: E-3
Folder Path: T:\SEC 2024\S24020 Chen-Moore - Pompano Beach, Non-Sewer Area C Lift Station\Electrical Dwgs\Sheets Filename: 23-0092.00085 Lift Station -E-2.dwg

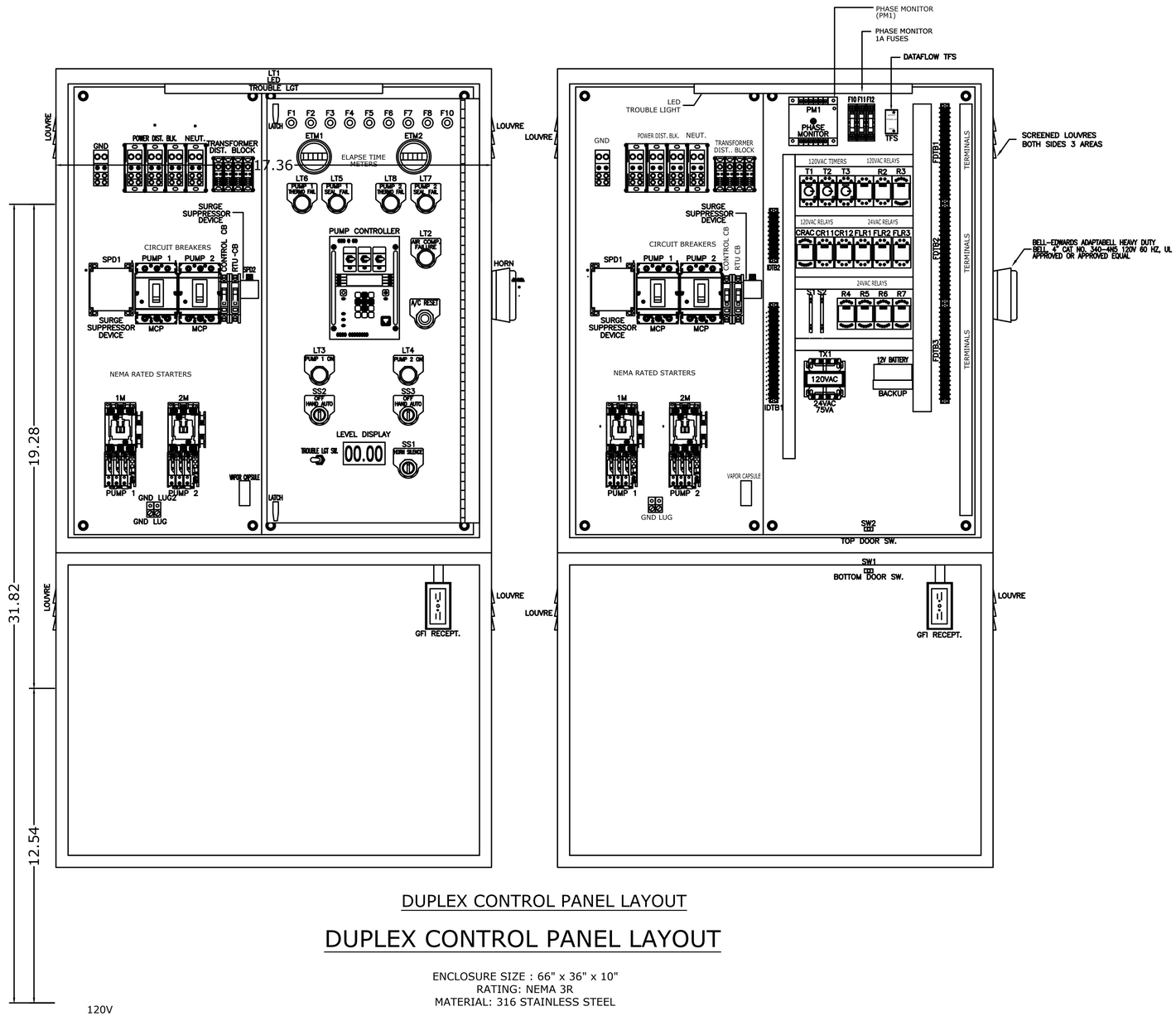

DUPLEX CONTROL PANEL LAYOUT

DUPLEX CONTROL PANEL LAYOUT

ENCLOSURE SIZE : 66" x 36" x 10"
RATING: NEMA 3R
MATERIAL: 316 STAINLESS STEEL

ELECTRICAL INPUT CONNECTION BLOCK

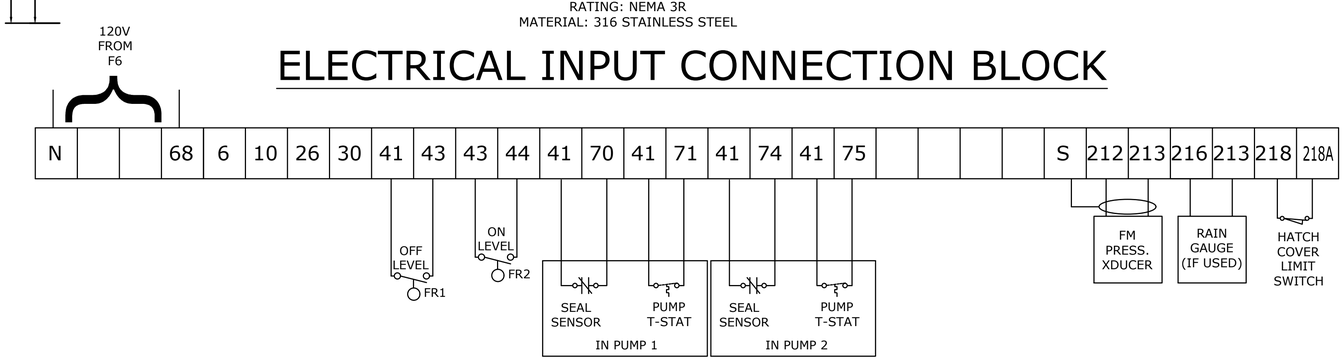

VERTICAL DATUM INFORMATION
ALL ELEVATIONS SHOWN ARE IN NORTH AMERICAN VERTICAL DATUM OF 1988 (NAVD88)

Sunshine 811
Call 811 or visit sunshine811.com two full business days before digging to have buried facilities located and marked.
Check positive response codes before you dig!

BID SET

cma
chen moore and associates
500 West Cypress Creek Road
Suite 600
Ft. Lauderdale, FL 33309
954.730.0707
www.chenmoore.com

REGISTRATION
DAVID LARRY M. SMITH, PE
LICENSE NO. 45997
DATE: 1/17/2025

LARRY M. SMITH LICENSE No. 45997 STATE OF FLORIDA PROFESSIONAL ENGINEER

THIS SEAL IS ONLY VALID ON PRINTED COPIES THAT ARE DATED WITH THE LICENSEE'S ORIGINAL HAND SIGNATURE. SCANNED OR ELECTRONIC COPIES ARE NOT CONSIDERED SIGNED AND SEALED.

SEC Smith Engineering Consultants, Inc.
State Auth. #8228
2161 Palm Beach Lakes Blvd., Suite 312
West Palm Beach, Florida 33409
(561) 616-3911 fax (561) 616-3912
www.smithengineeringconsultants.com

CLIENT
pompano beach
Florida's Warmest Welcome
CITY OF POMPANO BEACH
100 WEST ATLANTIC BOULEVARD
POMPANO BEACH, FL 33060
Phone: 954.786.4600

PROJECT INFORMATION
NON SEWER AREA C SANITARY SEWER IMPROVEMENTS

POMPANO BEACH, FL

PROJECT NUMBER
23-0092.00085

CLIENT PROJECT NUMBER
P331425

VERIFY SCALES
0 — 1"
IF NOT ONE INCH ON THIS SHEET, ADJUST SCALES ACCORDINGLY

REVISIONS

DATE OF ISSUE
01/17/25

DESIGNED BY
SPH

DRAWN BY
SPH

CHECKED BY
LMS

DRAWING TITLE
DUPLEX CONTROL PANEL LAYOUT

DRAWING NUMBER
E-4
38 OF 40

Plot Date: 1/17/2025 6:09:34 PM Username: StevePHockman Layout Name: E-4
Folder Path: T:\SEC 2024\S24020 Chen-Moore- Pompano Beach, Non-Sewer Area C Lift Station\Electrical Dwgs\Sheets Filename: 23-0092.00085 Lift Station -E-2.dwg

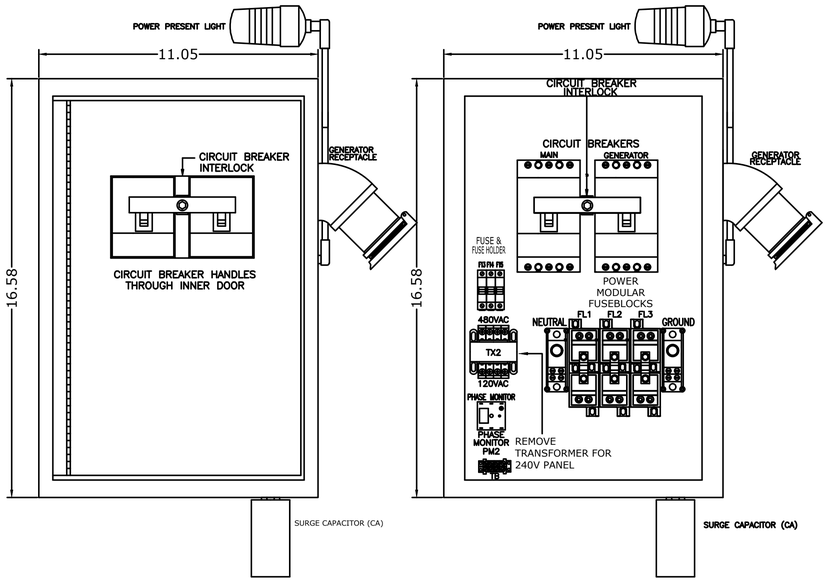

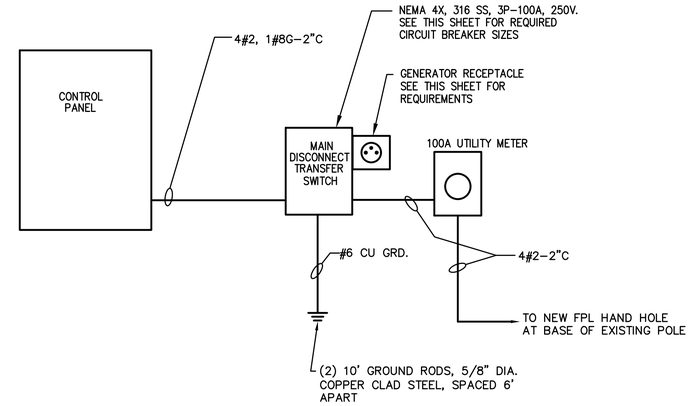

SINGLE LINE DIAGRAM

SERVICE: 120/240V, 3ø, 4W (HIGH LEG)

LOAD CALCULATIONS:

120/240V, 3ø, 4 WIRE (HIGH LEG)

MISCELLANEOUS LOADS	6.0AMPS
PUMP MOTORS (2–5HP)	30.4AMPS
25% OF LARGEST MOTOR (5HP)	3.8AMPS
TOTAL	40.2AMPS

100 AMP BREAKER PROVIDED

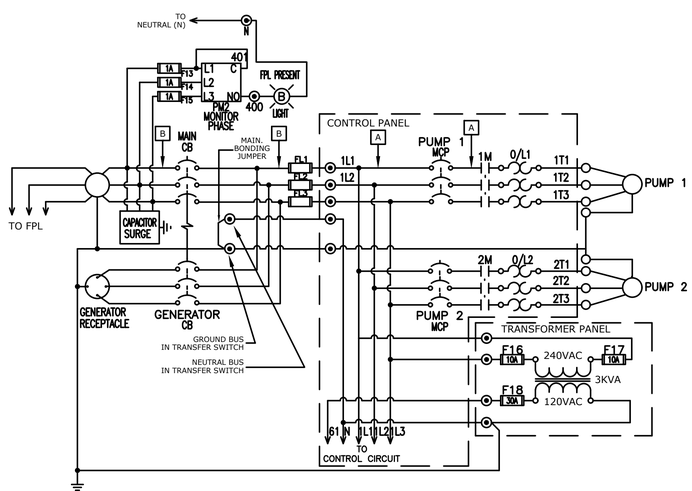

240V MAIN POWER CIRCUIT

	240 VOLT								
	HP	MOTOR AMP (I)	STARTER SIZE	CONDUCTOR (A)	PUMP CB	MAIN/EMER CB	CONDUCTOR (B)	GENERATOR PLUG*	SERVICE RACEWAY (MIN)
	3	9.6	1	12	20	100	1 (44A)	100	2"
X	5	15.2	1	10	40	100	1 (58A)	100	2"
	7.5	22	2	10	50	125	1 (75A)	100	2"
	10	28	2	8	70	125	1 (90A)	100	2"
	15	42	3	6	100	175	0 (125A)	100	2"
	20	54	3	4	150	225	0 (155A)	100	2"
	25	68	4	4	175	300	00 (190A)	100	2"
	30	80	4	3	200	300	000 (220A)	100	2"

NOTE :

1. THE ABOVE TABLE COMPILED PER CURRENT NATIONAL ELECTRIC CODE SECTION 430 TABLE 430.250
2. GROUNDING ELECTRODE SIZED PER NATIONAL ELECTRICAL CODE
3. *GENERATOR PLUGS ARE SIZED TO MATCH THE GENERATOR'S CORD, NOT THE ELECTRICAL SERVICE.
4. CONDUCTOR B IS A MOTOR CIRCUIT FEEDER, RATED AT 90 DEG C, SIZED FOR 2 PUMPS AT 125% OF FLA PLUS A 20 AMP GENERAL LOAD.
5. DESIGNER TO VERIFY DATA IN THESE TABLES
6. SERVICE RACEWAY TO BE OVERSIZED AS SHOWN TO ACCOMMODATE FUTURE EXPANSION.

GENERAL NOTES

1. CONTRACTOR SHALL PROVIDE AND INSTALL CONTROL PANEL, CONNECTION PANEL, AND TRANSFER SWITCH PANEL. MAKE ALL CONNECTIONS NECESSARY FOR A COMPLETE WORKING SYSTEM IN PLACE.
2. THE CONTRACTOR SHALL PROVIDE ALL LABOR, MATERIALS, TOOLS, AND INCIDENTALS REQUIRED FOR A COMPLETE ELECTRICAL SYSTEM AS SHOWN HEREIN.
3. ALL EQUIPMENT AND MATERIALS SHALL BE NEW AND UNUSED AND U.L. LISTED.
4. ALL APPLICABLE ELECTRICAL CODES (LATEST EDITION) MUST BE ADHERED TO INCLUDING THE N.E.C. AND LOCAL CODES.
5. ALL WIRES SHALL BE COPPER RATED XHHW.
6. ALL CONDUIT SHALL BE RIGID ALUMINUM TO WET WELL, SCH 40 PVC UNDERGROUND, AND RIGID ALUMINUM ABOVE GRADE TO ELBOW BELOW GRADE.
7. BOND WIRE SIZED PER NEC TABLE 250–95 SHALL BE INSTALLED FROM THE GROUND BUS IN THE CONTROL PANEL TO EACH MOTOR CASING.
8. TELEMETRY ANTENNA AND RELATED R.T.U. EQUIPMENT SHALL BE PROVIDED AND INSTALLED BY THE CONTRACTOR.
9. CONTRACTOR SHALL COORDINATE ALL ELECTRIC SERVICE INSTALLATIONS WITH THE FPL POWER UTILITY. INCLUDE ALL COST FOR DIRECTONAL BORE SERVICE CONDUIT AND THE INSTALLATION OF THE FPL PROVIDED HAND HOLE TO BE INSTALLED AT BASE OF EXISTING POLE. INCLUDE ALL COST FOR ELECTRICAL SERVICE UPGRADE AND METER.
10. OPERATE PUMPS, CHECK DIRECTION, RECORD VOLTAGE AND AMPERAGE WITH EACH AND ALL PUMPS RUNNING.
11. COMBUSTIBLE GAS DETECTOR SHALL BE SENSIDYNE MODEL #701–3276–2XP, SENSOR MODEL #111250–D–1, REMOTE MODEL #701–3276–2R20 OR APPROVED EQUAL.
12. CONTRACTOR SHALL PROTECT ALL EXISTING ITEMS DURING CONSTRUCTION INCLUDING, BUT NOT LIMITED TO, TREES, DRAINAGE STRUCTURES AND SURROUNDING APRONS, WATER STRUCTURES AND VALVES, LIGHT POLE FIXTURES, SIGNAGE FIXTURES, HANDRAILS, TELEPHONE AND COMMUNICATION EQUIPMENT, DECORATIVE BRICK PAVERS AND MAILBOXES. IT IS THE RESPONSIBILITY OF THE CONTRACTOR TO RESTORE ALL DAMAGED ITEMS TO EQUAL OR BETTER CONDITIONS.
13. CONTRACTOR SHALL PROTECT ALL EXISTING DRIVEWAYS NOT LOCATED WITHIN THE CONSTRUCTION LIMITS OF THE PROJECT. ANY DAMAGE CAUSED TO EXISTING DRIVEWAYS SHALL BE RE RESTORED BY THE CONTRACTOR AT NO EXTRA COST TO THE OWNERS.
14. CONTRACTOR SHALL PROVIDE AND INSTALL KELLER LEVEL RAT LEVEL TRANSDUCER WITH DISPLAY IN CONTROL PANEL.

VERTICAL DATUM INFORMATION
ALL ELEVATIONS SHOWN ARE IN NORTH AMERICAN VERTICAL DATUM OF 1988 (NAVD88)

Sunshine 811
Call 811 or visit sunshine811.com two full business days before digging to have buried facilities located and marked.
Check positive response codes before you dig!

BID SET

cma
chen moore and associates
500 West Cypress Creek Road
Suite 600
Ft. Lauderdale, FL 33309
954.730.0707
www.chenmoore.com

REGISTRATION
DAVID LARRY M. SMITH, PE
LICENSE NO. 45997
DATE: 1/17/2025

LARRY M. SMITH LICENSE No. 45997 STATE OF FLORIDA PROFESSIONAL ENGINEER

THIS SEAL IS ONLY VALID ON PRINTED COPIES THAT ARE DATED WITH THE LICENSEE'S ORIGINAL HAND SIGNATURE. SCANNED OR ELECTRONIC COPIES ARE NOT CONSIDERED SIGNED AND SEALED.

SEC Smith Engineering Consultants, Inc.
State Auth. #8228
2161 Palm Beach Lakes Blvd., Suite 312
West Palm Beach, Florida 33409
(561) 616-3911 fax (561) 616-3912
www.smithengineeringconsultants.com

CLIENT
pompano beach
Florida's Warmest Welcome
CITY OF POMPANO BEACH
100 WEST ATLANTIC BOULEVARD
POMPANO BEACH, FL 33060
Phone: 954.786.4600

PROJECT INFORMATION
NON SEWER AREA C SANITARY SEWER IMPROVEMENTS

POMPANO BEACH, FL

PROJECT NUMBER
23-0092.00085

CLIENT PROJECT NUMBER
P331425

VERIFY SCALES
0 — 1"
IF NOT ONE INCH ON THIS SHEET, ADJUST SCALES ACCORDINGLY

REVISIONS

DATE OF ISSUE
11/08/24

DESIGNED BY
SPH

DRAWN BY
SPH

CHECKED BY
LMS

DRAWING TITLE
ELECTRICAL SERVICE AND TRANSFER SWITCH

DRAWING NUMBER
E-5
39 OF 40

Plot Date: 1/17/2025 6:11:05 PM Username: StevePHockman Layout Name: E-5
Folder Path: T:\SEC 2024\S24020 Chen-Moore- Pompano Beach, Non-Sewer Area C Lift Station\Electrical Dwgs\Sheets Filename: 23-0092.00085 Lift Station- E-2.dwg

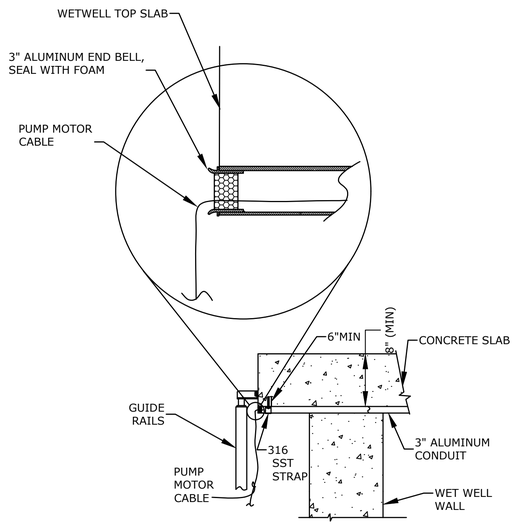

GUIDE RAIL AND PUMP CONDUIT
NTS

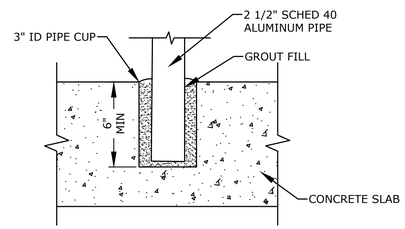

3" PIPE CUP
NTS

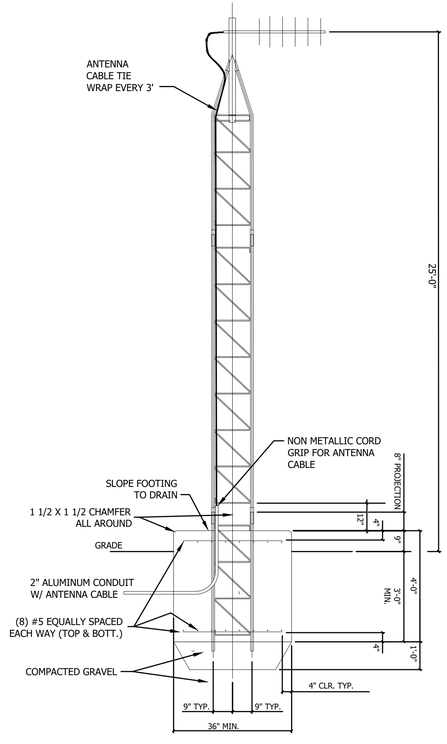

25 FEET RADIO ANTENNA MOUNTING DETAIL
NTS

ANTENNA NOTES:

1. THIS DETAIL SHALL BE USED FOR LIFT STATION WITH COMMUNICATION PATH OBSTRUCTION WHICH REQUIRES ANTENNA HEIGHT GREATER THAN 18'.
2. GRAVEL SHOULD EXTEND 6" BELOW BOTTOM OF TOWER BASE.
3. COAX CONNECTORS SHOULD BE WRAPPED IN ALPHA HEAT SHRINK FIT-321-1INCH.
4. MAST & METAL STRUCTURE SHALL BE GROUNDED IN ACCORDANCE WITH N.E.C. SECTION 810-21.
5. RTU ANTENNA TOWER INSTALLATION SHALL MEET FLORIDA BUILDING CODE WIND LOADING REQUIREMENT WITH APPROPRIATE WIND GUST FACTOR FOR THE LOCATION OF INSTALLATION. THE CONTRACTOR SHALL INCLUDE THE SHOP DRAWING SUBMITTAL, A WIND LOADING CALCULATION SIGNED AND SEALED BY A STRUCTURAL ENGINEER REGISTERED IN THE STATE OF FLORIDA SHOWING THAT THE PROPOSED TOWER AND INSTALLATIONS WILL MEET THE GIVEN WIND LOADING REQUIREMENT.
6. FINAL CONCRETE BASE SIZED TO BE ADJUSTED TO MEET WIND LOADING REQUIREMENT.

VERTICAL DATUM INFORMATION
ALL ELEVATIONS SHOWN ARE IN NORTH AMERICAN VERTICAL DATUM OF 1988 (NAVD88)

Sunshine 811
Call 811 or visit sunshine811.com two full business days before digging to have buried facilities located and marked.
Check positive response codes before you dig!

BID SET

cma
chen moore and associates
500 West Cypress Creek Road
Suite 600
Ft. Lauderdale, FL 33309
954.730.0707
www.chenmoore.com

REGISTRATION
DAVID LARRY M. SMITH, PE
LICENSE NO. 45997
DATE: 1/17/2025

LARRY M. SMITH LICENSE No. 45997 STATE OF FLORIDA PROFESSIONAL ENGINEER

THIS SEAL IS ONLY VALID ON PRINTED COPIES THAT ARE DATED WITH THE LICENSEE'S ORIGINAL HAND SIGNATURE. SCANNED OR ELECTRONIC COPIES ARE NOT CONSIDERED SIGNED AND SEALED.

SEC Smith Engineering Consultants, Inc.
State Auth. #8228
2161 Palm Beach Lakes Blvd., Suite 312
West Palm Beach, Florida 33409
(561) 616-3911 fax (561) 616-3912
www.smithengineeringconsultants.com

CLIENT
pompano beach
Florida's Warmest Welcome
CITY OF POMPANO BEACH
100 WEST ATLANTIC BOULEVARD
POMPANO BEACH, FL 33060
Phone: 954.786.4600

PROJECT INFORMATION

NON SEWER AREA C SANITARY SEWER IMPROVEMENTS

POMPANO BEACH, FL

PROJECT NUMBER
23-0092.00085

CLIENT PROJECT NUMBER
P331425

VERIFY SCALES
0 — 1"
IF NOT ONE INCH ON THIS SHEET, ADJUST SCALES ACCORDINGLY

REVISIONS

DATE OF ISSUE
11/08/24

DESIGNED BY
SPH

DRAWN BY
SPH

CHECKED BY
LMS

DRAWING TITLE

ELECTRICAL DETAILS

DRAWING NUMBER
E-6
40 OF 40

Plot Date: 1/17/2025 5:03:55 PM Username: StevePHockman Layout Name: E-6
Folder Path: T:\SEC 2024\S24020 Chen-Moore- Pompano Beach, Non-Sewer Area C Lift Station\Electrical Dwgs\Sheets Filename: 23-0092.00085 Lift Station -E-2.dwg