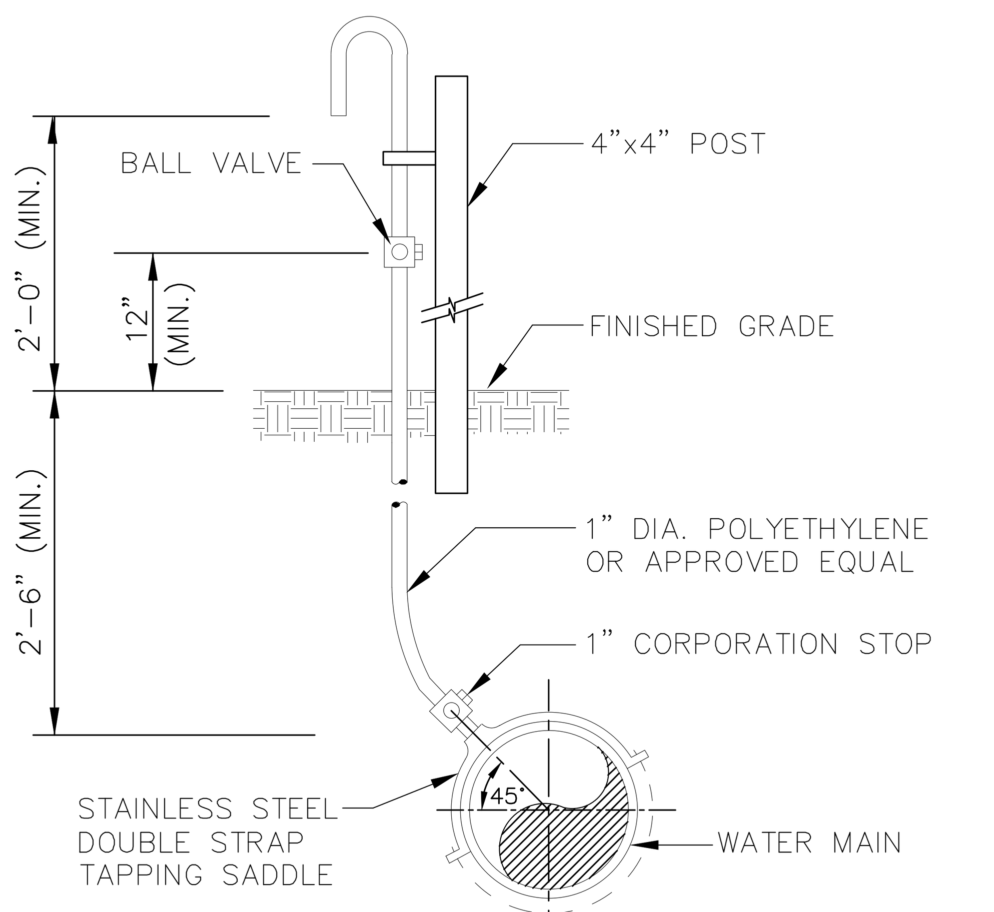

SAMPLE POINT (MAIN)

ALL D.I.P. TO BE PAINTED BLUE ON TOP HALF OF PIPE.

ENGINEERING STANDARDS 2022				
REVISIONS		ENGINEERING DIVISION CITY OF POMPANO BEACH	SAMPLE POINT (MAIN)	
BY	DATE			DATE: MAY 2022
S.S.	04-2005	SCALE: N.T.S.		DWG. NO. 100-1

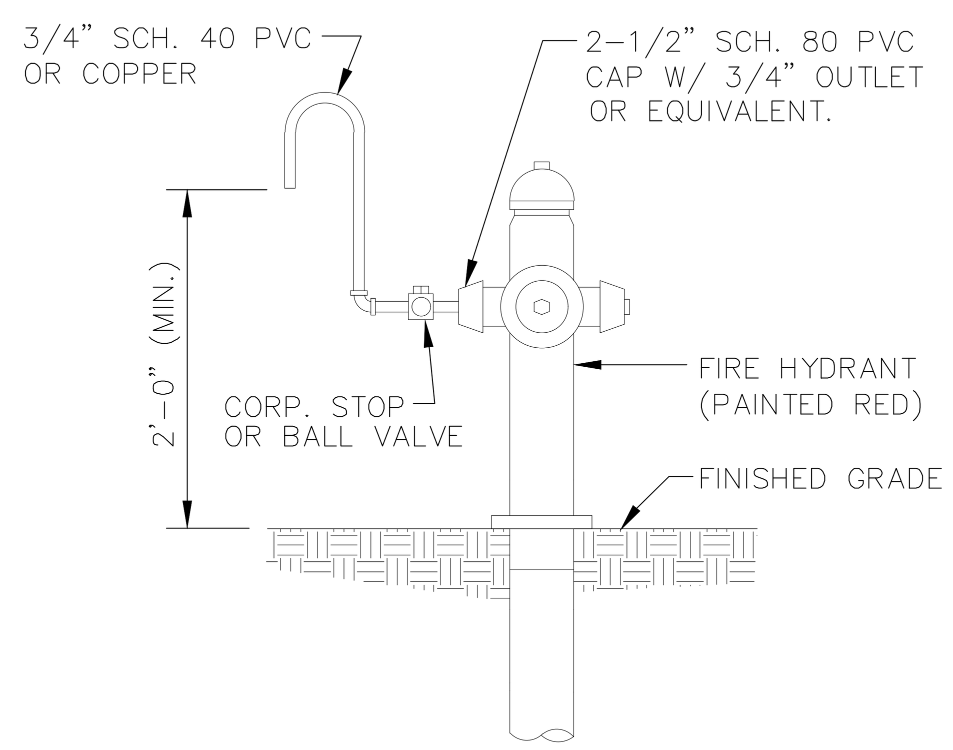

SAMPLE POINT (HYDRANT)

ALL POMPANO BEACH HYDRANTS SHALL BE PAINTED RED.

ALL D.I.P. TO BE PAINTED BLUE ON TOP HALF OF PIPE.

ENGINEERING STANDARDS 2022				
REVISIONS		ENGINEERING DIVISION CITY OF POMPANO BEACH	SAMPLE POINT (HYDRANT)	
BY	DATE			DATE: MAY 2022
S.S.	04-2005	SCALE: N.T.S.		DWG. NO. 101-1

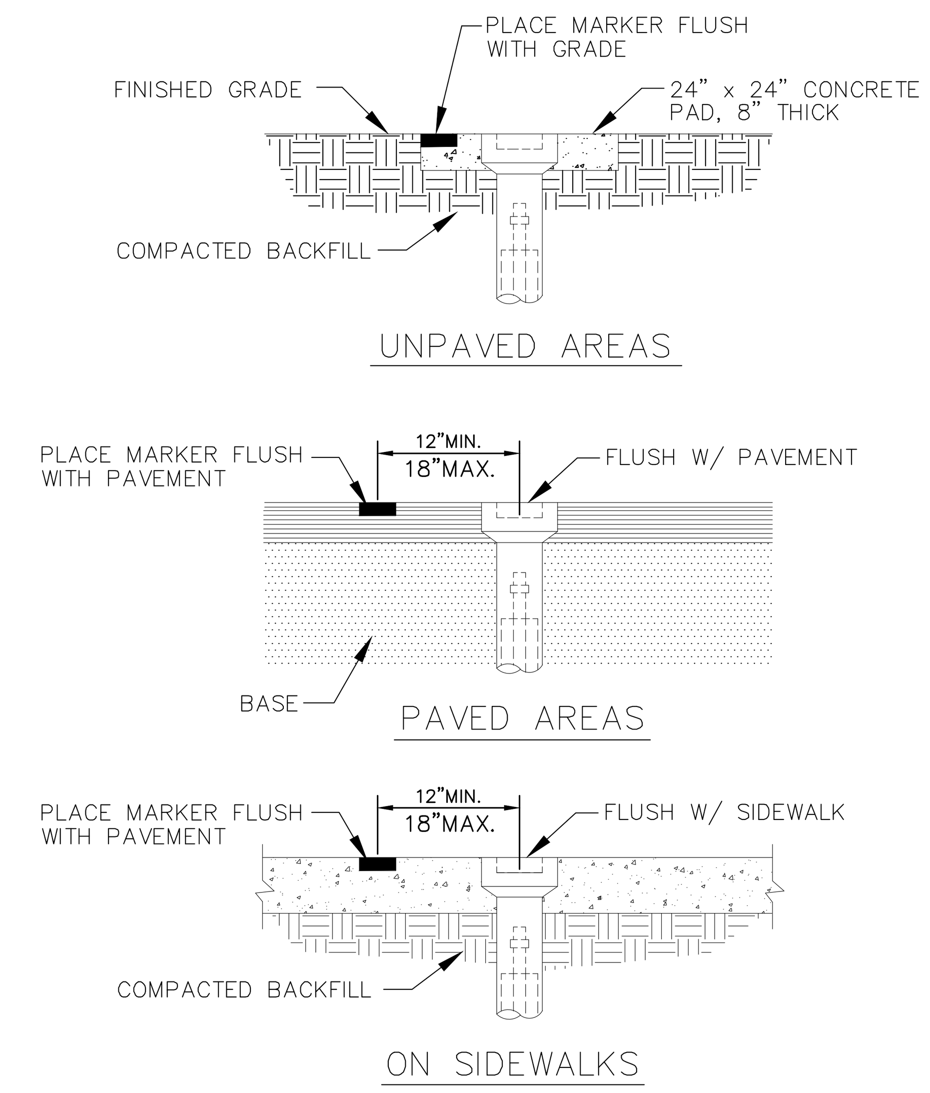

VALVE BOX SETTINGS

ENGINEERING STANDARDS 2022				
REVISIONS		ENGINEERING DIVISION CITY OF POMPANO BEACH	VALVE BOX SETTINGS	
BY	DATE			DATE: MAY 2022
S.S.	04-2005	SCALE: N.T.S.		DWG. NO. 102-1

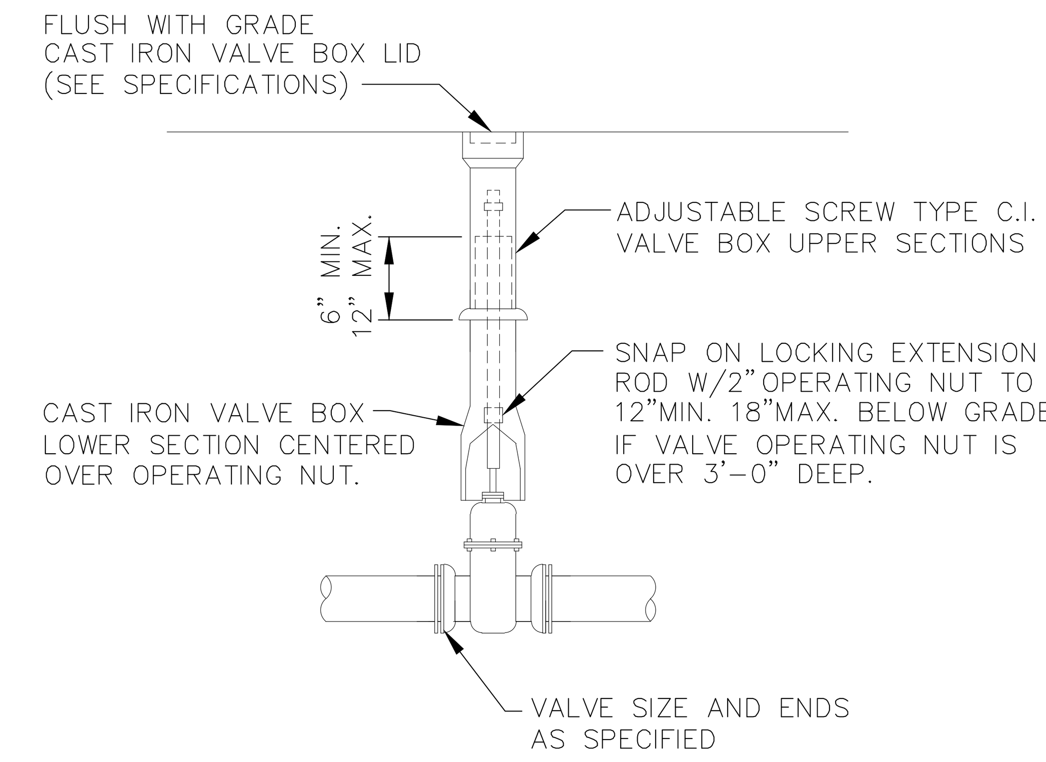

GATE OR PLUG VALVE SETTING

USE MEGALUGS AT ALL PIPE JOINTS

ALL D.I.P. TO BE PAINTED BLUE ON TOP HALF OF PIPE.

ENGINEERING STANDARDS 2022				
REVISIONS		ENGINEERING DIVISION CITY OF POMPANO BEACH	GATE OR PLUG VALVE SETTINGS	
BY	DATE			DATE: MAY 2022
S.S.	04-2005			
T.W.	11-2007	SCALE: N.T.S.		DWG. NO. 103-1

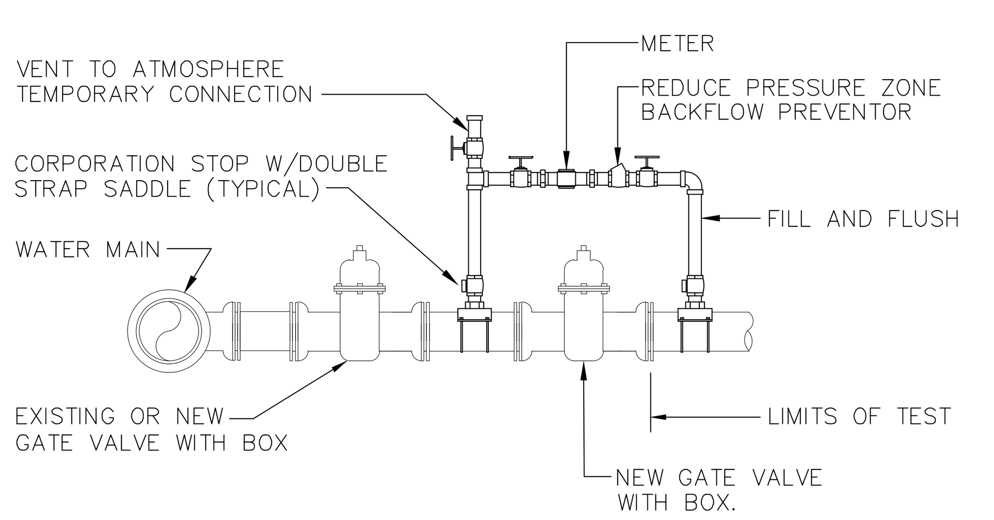

METHOD "B"

NOTES:

1. WATER MAIN TO BE PRESSURE TESTED AND DISINFECTED ACCORDING TO BROWARD COUNTY PUBLIC HEALTH UNIT REGULATIONS, AWWA, AND MUNICIPAL SPECIFICATIONS IN EFFECT.
2. BACTERIOLOGICAL TESTS ARE TO BE PERFORMED BY THE CONTRACTOR AND AN APPROVED TESTING LABORATORY.
3. REMOVE TEMPORARY CONNECTION AT SADDLE ON NEW MAINS AFTER FILLING AND FLUSHING HAS BEEN COMPLETED AND REPLACE WITH BRASS PLUG
4. PROVIDE ALL NECESSARY THRUST BLOCKS OR OTHER RESTRAINTS.
5. FILLING AND FLUSHING LOCATIONS SHALL BE COORDINATED BY THE CONTRACTOR, ENGINEER, AND CITY.
6. VENT TO ATMOSPHERE SHALL REMAIN OPEN DURING ALL PHASES OF PRESSURE TESTING.
7. AFTER COMPLETION FILL AND FLUSH CONNECTION
8. USE MEGALUGS AT ALL PIPE JOINTS

FILLING AND FLUSHING CONNECTION

ALL D.I.P. TO BE PAINTED BLUE ON TOP HALF OF PIPE.

ENGINEERING STANDARDS 2022				
REVISIONS		ENGINEERING DIVISION CITY OF POMPANO BEACH	FILLING / FLUSHING CONNECTION	
BY	DATE			DATE: MAY 2022
S.S.	04-2005			
T.W.	11-2007			
S.S.	01-2012	SCALE: N.T.S.		DWG. NO. 104-1

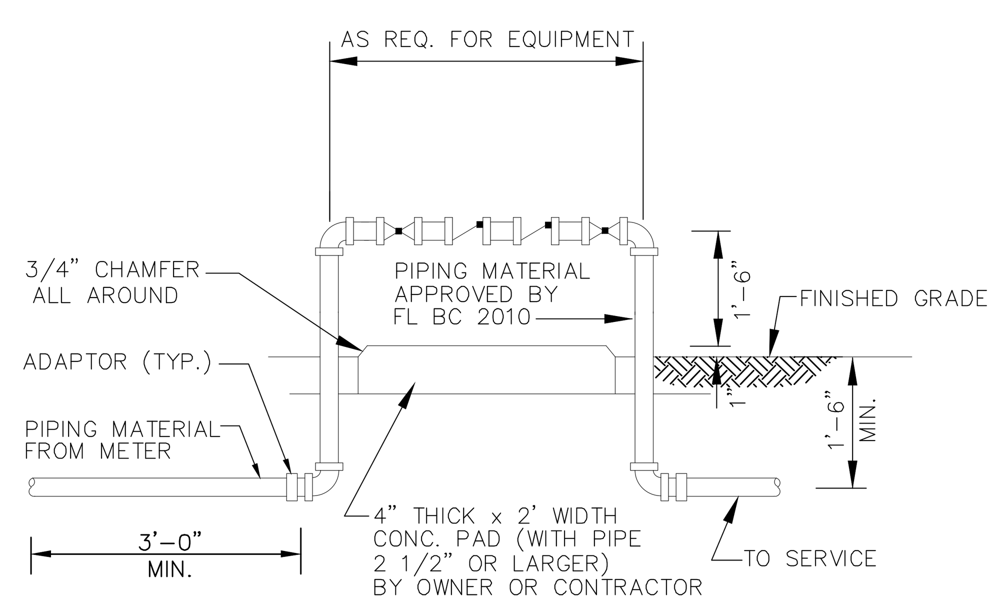

BACKFLOW PREVENTER

USE MEGALUGS AT ALL PIPE JOINTS 3" AND LARGER
PLEASE SEE METER INSTALL DIMENSION LIST ON STANDARD NO. 106-4
SMALL UNITS UNI-STRUT SUPPORT

ENGINEERING STANDARDS 2022				
REVISIONS		ENGINEERING DIVISION CITY OF POMPANO BEACH	BACKFLOW PREVENTER	
BY	DATE			DATE: MAY 2022
T.W.	04-2008			
S.S.	03-2009			
S.S.	11-2012			
S.S.	01-2013	SCALE: N.T.S.		DWG. NO. 106-1

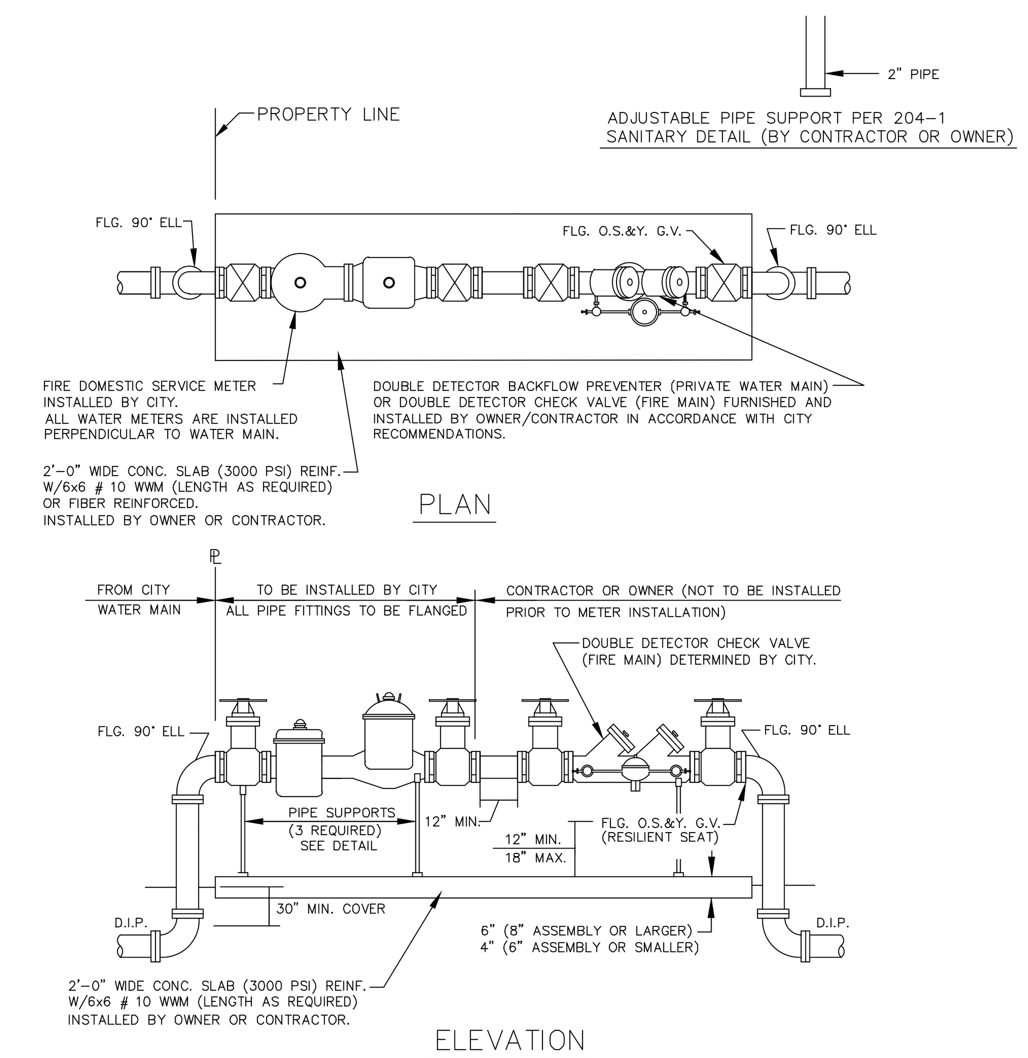

FIRE ONLY METER AND BACKFLOW DEVICE DETAILS

NOTES

1. THE BACKFLOW PREVENTOR FOR THE BY-PASS SHALL BE DDCV OR RPZ.
2. PLEASE NOTE THAT WATER METERS 3" AND LARGER ARE SUBJECT TO AN APPROXIMATE ORDER LEAD TIME OF 60 TO 75 DAYS AFTER FULL PAYMENT. PLEASE CONTACT CUSTOMER SERVICE AT 954-786-4637 TO ARRANGE FOR METER PROCUREMENT AND INSTALLATION.
3. USE MEGALUGS AT ALL PIPE JOINTS
4. PLEASE SEE METER INSTALL DIMENSION LIST ON STANDARD NO. 106-4

ENGINEERING STANDARDS 2022				
REVISIONS		ENGINEERING DIVISION CITY OF POMPANO BEACH	FIRE ONLY METER AND BACKFLOW DEVICE	
BY	DATE			DATE: MAY 2022
S.S.	05-2011			
S.S.	11-2012			
S.S.	12-2013			
S.S.	11-2016	SCALE: N.T.S.		DWG. NO. 106-3

FIRE METERS - OS & Y VALVES, GASKETS & METER					
(NEPTUNE MACH 10 Ultrasonic Meter)					2" MIN. TRAVEL
SIZE	VALVES (2)	GASKETS (4)	METER w/ Strainer	TOTAL LENGTH	
3" w/ 4" X 3" Reducer **	16"	1/2"	30" **	46 1/2"	
4"	18"	1/2"	27 1/2"	46"	
6"	21"	1/2"	33"	54 1/2"	
8"	23"	1/2"	30"	53 1/2"	
10"	26"	1/2"	41"	67 1/2"	

FIRE &/or Domestic Water SERVICE METERS - TEES, OS & Y VALVES, GASKETS & METERS					
(NEPTUNE MACH 10 Ultrasonic Meter)					
SIZE	TEES (2)	VALVES (2)	GASKETS (6)	Meter w/ Strainer	TOTAL LENGTH
3" w/ 4" X 3" Reducer **	3" X 3" - 22"	16"	3/4"	30" **	68 3/4"
4"	4" X 3" - 26"	18"	3/4"	27 1/2"	72 1/4"
6"	6" X 4" - 32"	21"	3/4"	33"	86 3/4"
8"	8" X 4" - 36"	23"	3/4"	30"	89 3/4"
10"	10" X 6" - 44"	26"	3/4"	41"	111 3/4"

*All fittings, valves and meters are flanged & all dimensions are from face of flange to face of flange.

NOTE:
PLEASE NOTE THAT WATER METERS 3" AND LARGER ARE SUBJECT TO AN APPROXIMATE ORDER LEAD TIME OF 60 TO 75 BUSINESS DAYS AFTER FULL PAYMENT. PLEASE CONTACT CUSTOMER SERVICE AT 954-786-4637 TO ARRANGE FOR METER PROCUREMENT AND INSTALLATION. LARGE METERS MUST BE AT MINIMUM ORDERED PRIOR TO INITIAL INSPECTIONS.

ENGINEERING STANDARDS 2022				
REVISIONS		ENGINEERING DIVISION CITY OF POMPANO BEACH	METER INSTALL DIMENSION LIST	
BY	DATE			DATE: JAN. 2022
T.W.	02-2008			
S.S.	11-2016			
A.S.	01-2022	SCALE: N.T.S.		DWG. NO. 106-4

KEITH
301 East Atlantic Blvd.
Pompano Beach, FL 33060
PH: (954) 788-3400
Florida Engineering Business License: CA7928
Florida Surveyor and Mapper Business License: LB6860
Florida Landscape Architecture Business License: LC26000457

REVISIONS		
NO.	DESCRIPTION	DATE
1	REV. PER DRC	11/16/2021
2	REV. PER DRC	11/30/2021

RESPONSIBILITY FOR THE USE OF THESE PLANS PRIOR TO OBTAINING PERMITS FROM ALL AGENCIES HAVING JURISDICTION OVER THE PROJECT WILL FALL SOLELY UPON THE USER.

ISSUE DATE:	02/25/25
DESIGNED BY:	BB
DRAWN BY:	BB/FA
CHECKED BY:	NW
BID-CONTRACT:	

This item has been digitally signed and sealed by NILES T. WARRICK, P.E. on the date adjacent to the seal.
Printed copies of this document are not considered signed and sealed and the signature must be verified on any electronic copies.

NILES T. WARRICK LICENSE No. 94320 STATE OF FLORIDA PROFESSIONAL ENGINEER

2025.02.25 17:03:50-05'00'

NILES T. WARRICK, P.E.
FLORIDA REG. NO. 94320
(FOR THE FIRM)

CLIENT
PORTMAN HOLDINGS

PROJECT
2400 E ATLANTIC
2400 East Atlantic Blvd.
Pompano Beach, FL

SHEET TITLE
WATER AND SEWER DETAILS

SHEET NUMBER CU-501

PROJECT NUMBER 14267.00

STATUS: DRC SET

Plotted by: fascuntar On 2/25/2025 3:45 PM

Drawing name: H:\14267.00 - 2400 E Atlantic - Portman Holdings\Engineering\Cadd\14267.00-CU-5XX.dwg

DRC
PZ25-12000001
05/21/2025

DRC
PZ25-12000001
04/02/2025