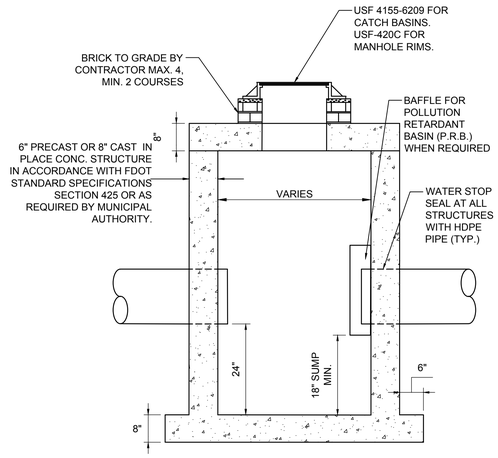

NOTES:
1. STRUCTURE MANUFACTURER AND/OR CONTRACTOR SHALL CONFIRM ALL STEEL REINFORCEMENT MEETS FDOT STANDARDS PER INDEX 425-010, SECTION 415 AND 425 PRIOR TO SUBMITTING ANY SHOP DRAWINGS FOR APPROVAL.
2. LOCKING GRATES TO BE PROVIDED.

11 CATCH BASIN / DRAINAGE MANHOLE DETAIL

NOT TO SCALE

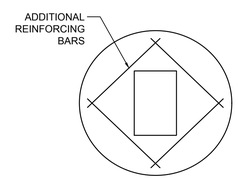

PLAN VIEW
TOP SLAB
FOR CATCH BASINS

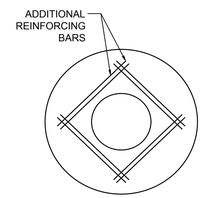

PLAN VIEW
TOP SLAB
FOR MANHOLES

12 CATCH BASIN / MANHOLE FRAME DETAIL

NOT TO SCALE

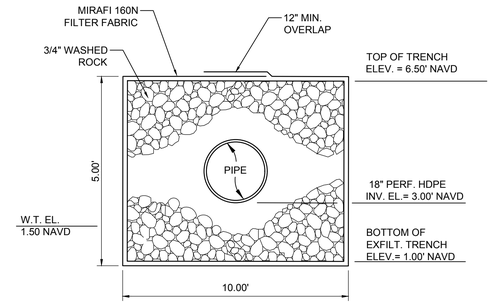

13 EXFILTRATION TRENCH DETAIL

NOT TO SCALE

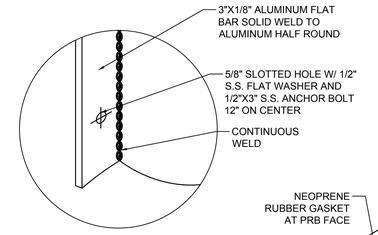

BRACKET DETAIL

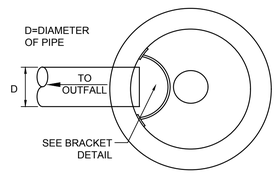

PLAN VIEW

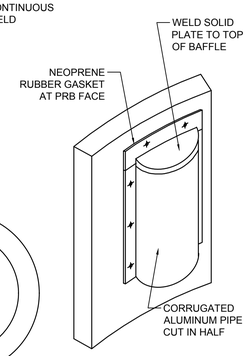

BAFFLE DETAIL

NOTE:
BAFFLE TO BE A SECTION OF CAP CUT IN HALF. CAP FOR BAFFLE SHALL BE THE NEXT STANDARD PIPE DIAMETER LARGER THAN THE INFLOW/ OUTFLOW PIPE.

14 POLLUTION RETARDANT BAFFLE DETAIL

NOT TO SCALE

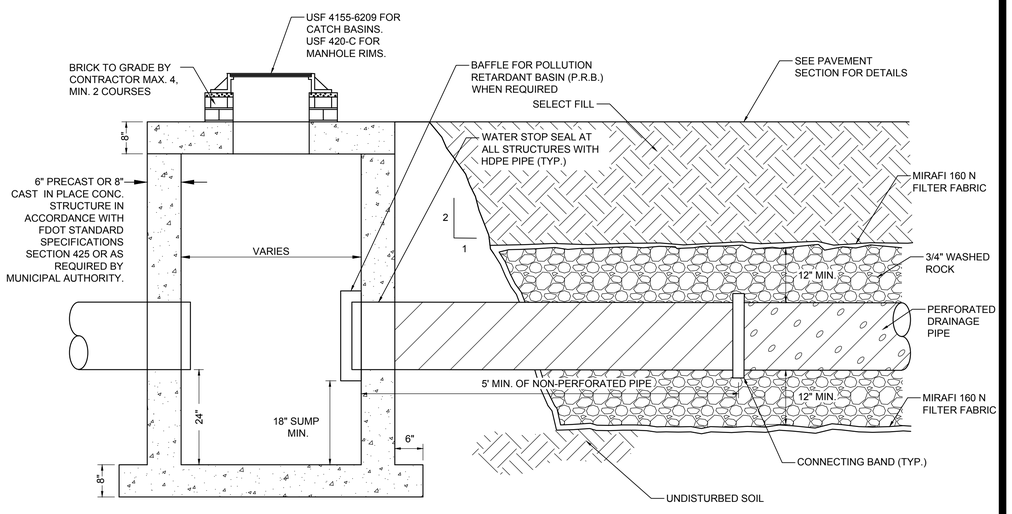

15 CATCH BASIN W/ PRB AND EXFILTRATION TRENCH

NOT TO SCALE

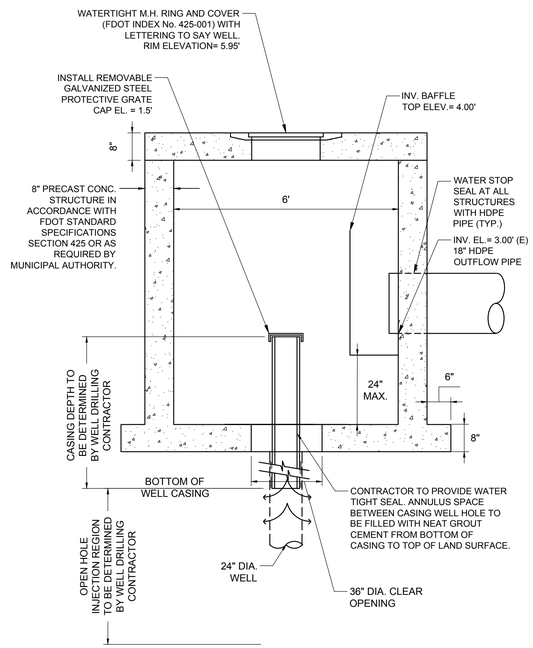

16 WELL #1 MH W/ INV. BAFFLE

NOT TO SCALE

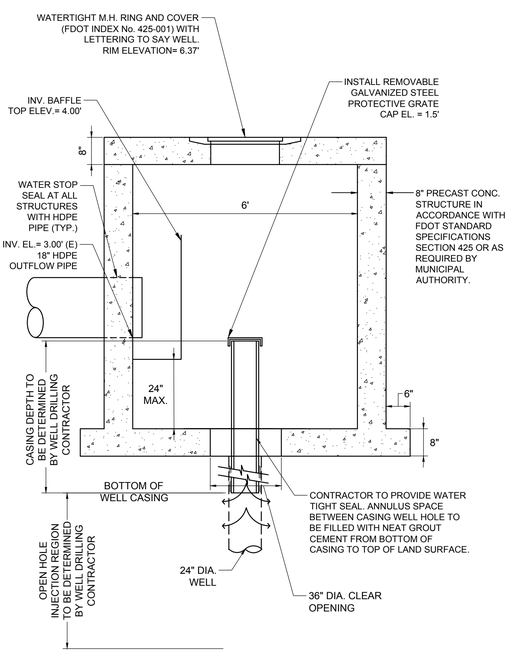

17 WELL #2 MH W/ INV. BAFFLE

NOT TO SCALE

KEITH
301 East Atlantic Blvd.
Pompano Beach, FL 33060
PH: (954) 788-3400
Florida Engineering Business License: CA7928
Florida Surveyor and Mapper Business License: LB6860
Florida Landscape Architecture Business License: LC26000457

REVISIONS

NO.	DESCRIPTION	DATE

RESPONSIBILITY FOR THE USE OF THESE PLANS PRIOR TO OBTAINING PERMITS FROM ALL AGENCIES HAVING JURISDICTION OVER THE PROJECT WILL FALL SOLELY UPON THE USER.

ISSUE DATE:	02/25/25
DESIGNED BY:	BB
DRAWN BY:	BB/FA
CHECKED BY:	NW
BID-CONTRACT:	

This item has been digitally signed and sealed by **NILES T. WARRICK, P.E.** on the date adjacent to the seal.

NILES T. WARRICK LICENSE No. 94320 STATE OF FLORIDA PROFESSIONAL ENGINEER

Printed copies of this document are not considered signed and sealed and the signature must be verified on any electronic copies.

2025.02.25 17:04:38-05'00'

NILES T. WARRICK, P.E.
FLORIDA REG. NO. 94320
(FOR THE FIRM)

CLIENT

PORTMAN HOLDINGS

PROJECT

2400 E ATLANTIC
2400 East Atlantic Blvd.
Pompano Beach, FL

SHEET TITLE

PAVING, GRADING, AND DRAINAGE DETAILS

SHEET NUMBER CP-502

PROJECT NUMBER 14267.00

DRC
PZ25-12000001
04/02/2025

STATUS: DRC SET

Plotted by: fascuntar On 2/25/2025 3:43 PM

Drawing name: H:\14267.00 - 2400 E Atlantic - Portman Holdings\Engineering\Cad\14267.00-CP-5XX.dwg