© COPYRIGHT 2007

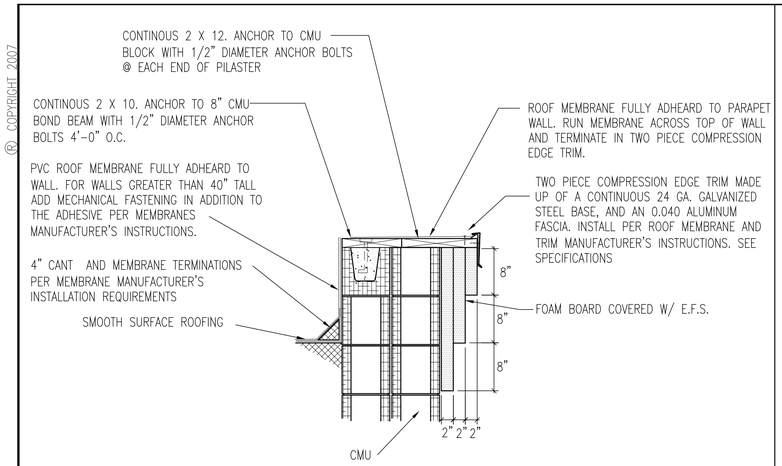

1" = 1'-0" AWS05-3

6 TYPICAL PARAPET DETAIL @ 8" PILASTER

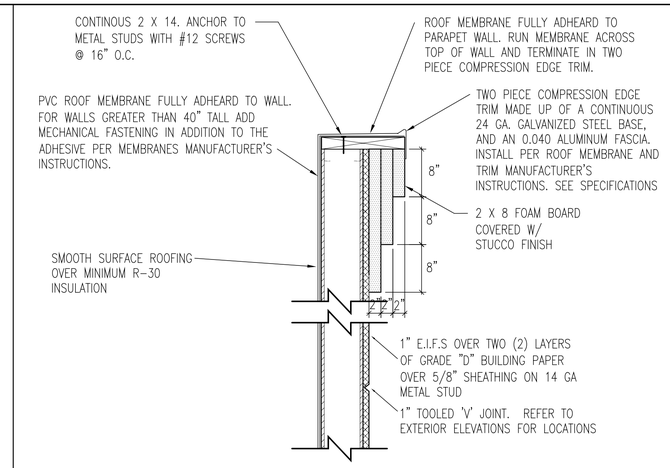

1" = 1'-0"

4 PARAPET DETAIL @ SOFFIT

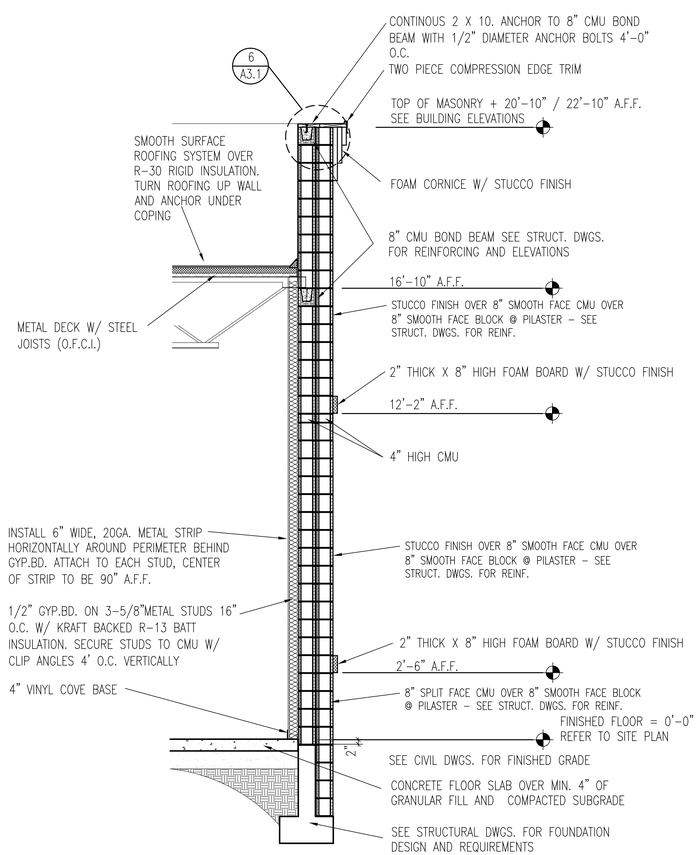

3/8" = 1'-0" 8 IN-PILASTER

3 WALL SECTION - PILASTER

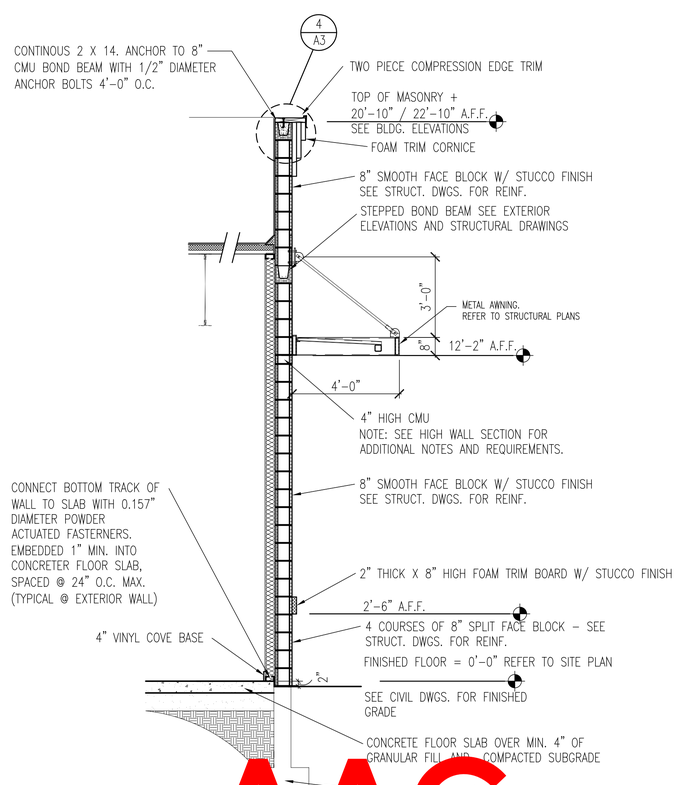

3/8" = 1'-0" AWS02

2 WALL SECTION END WALL

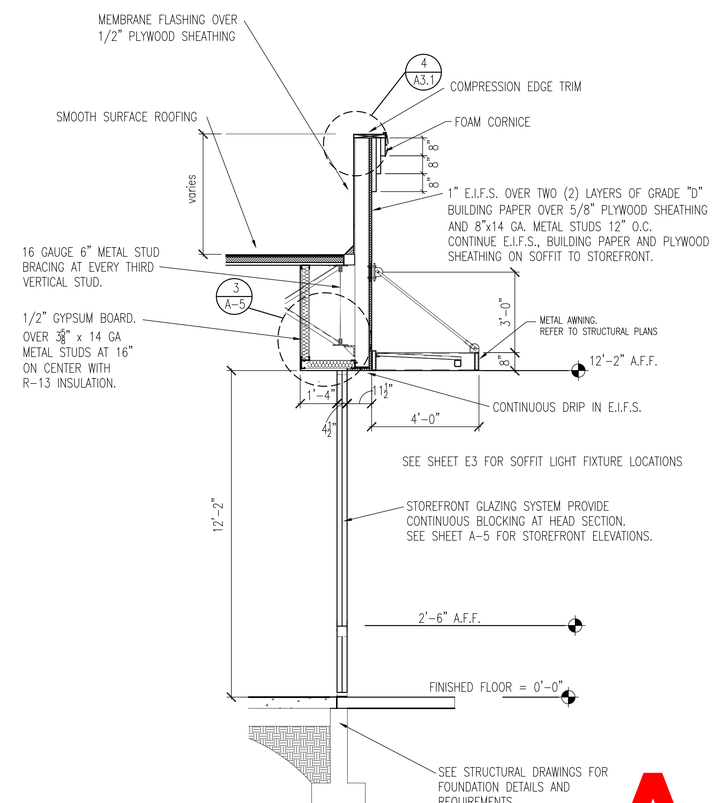

3/8" = 1'-0" AWS02

1 WALL SECTION - SIDE WALL (storefront)

AAC PZ20-12000007 2/2/21

AAC PZ20-12000007 03/03/2020

REVISIONS

1	REV1	4	REV4
2	REV2	5	REV5
3	REV3	6	REV6

AutoZone Store No. 6365
3001 WEST ATLANTIC AVE
POMPANO BEACH FL 33096
EXTERIOR WALL SECTIONS

Architect: George Callow - License#AR0014155
123 South Front Street
Memphis, Tennessee 38103
TEL.901-495-8705 FAX: (901) 495-8969
For Bidding & Contractor Information Contact:
McGraw - Hill Construction Tel. 615-884-1017
www.construction.com

George W Callow AR00141 55 State of Florida

Digitally signed by George W Callow AR0014155 State of Florida Date: 2020.02.04 10:51:34 -06'00'

03/19/17

A-6.1