DRAWN: GSG GSCHECKED: DESIGN LEADER: Development Support LE 65w2-a2.dwg 06-14-03 12:17pm

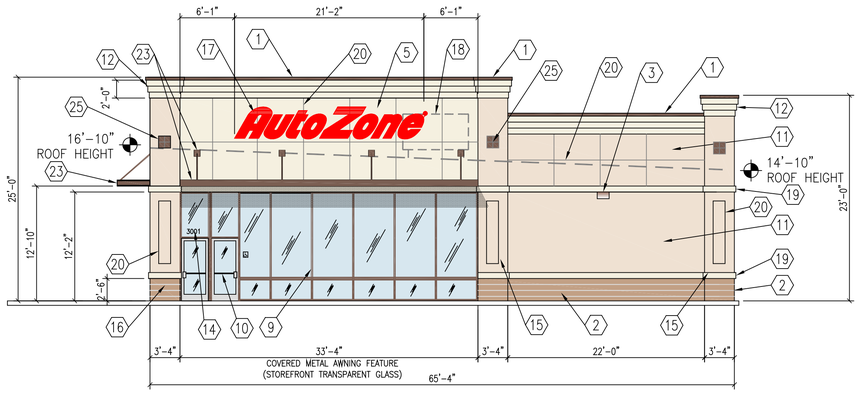

FRONT WALL
N.W. 30TH AVE. (EAST VIEW)

GLAZING REQUIRMENTS

GLAZING CALCULATIONS

FRONT WALL: (N.W. 3TH AVE.)

65'-4" (BUILDING LENGTH) x 16'-10" (ROOF HEIGHT) = 1,099 SQ.FT. BUILDING FACADE

1,099.50 SQ.FT. BUILDING FACADE x 30% GLAZING REQUIRED = 329.85 SQ. FT. REQ.

33'-4" (STOREFRONT GLASS LENGTH) x 12'-2" (STOREFRONT HEIGHT) = 405 SQ. FT GLAZING PROVIDED

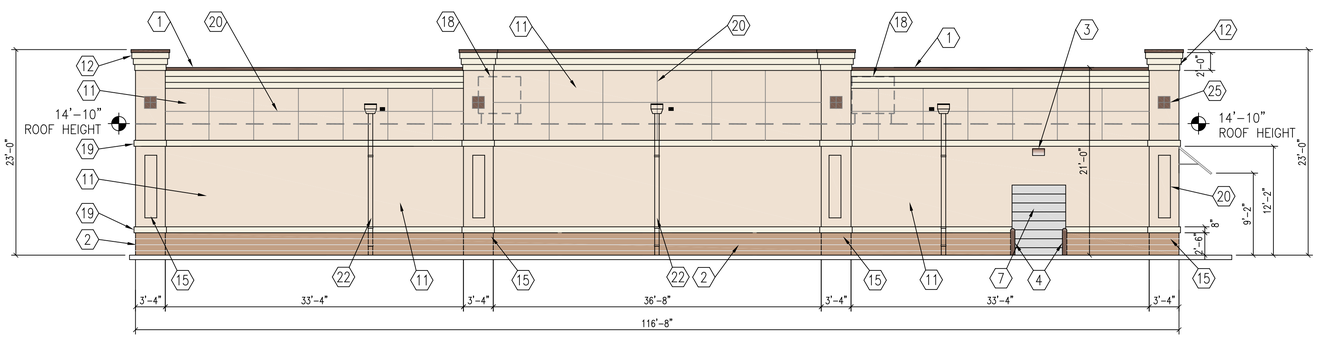

RIGHT SIDE WALL
(NORTH VIEW)

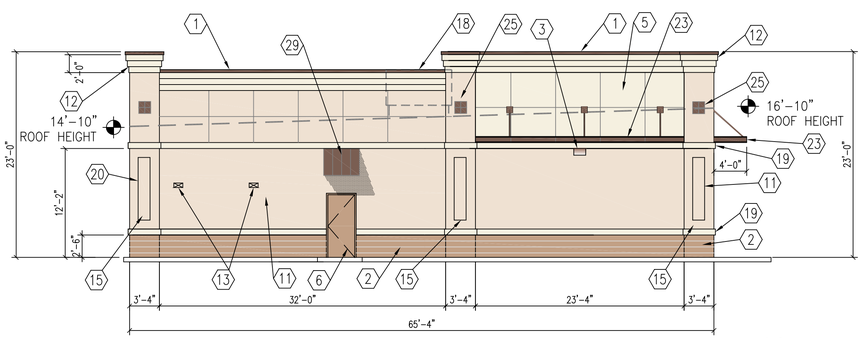

REAR WALL
(WEST VIEW)

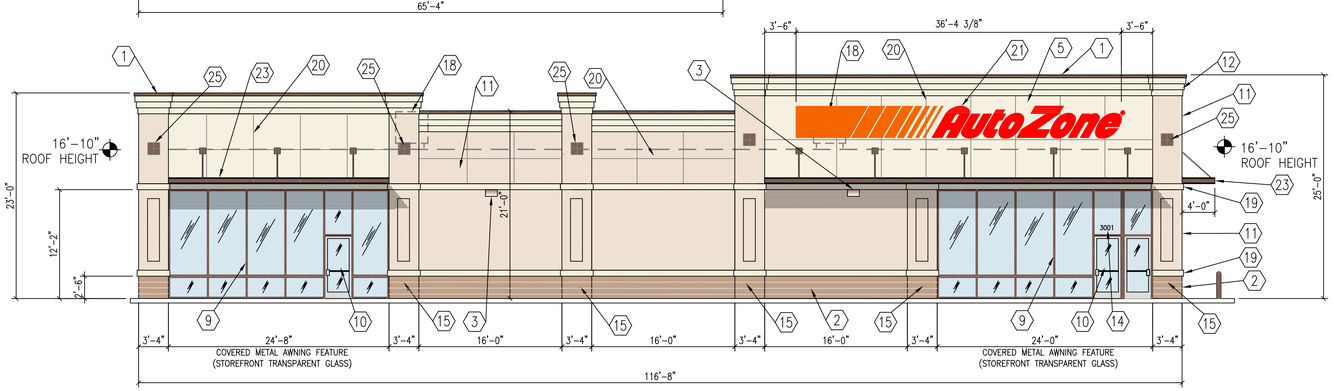

LEFT SIDE WALL
ATLANTIC BLVD. (SOUTH VIEW)

GLAZING REQUIRMENTS

GLAZING CALCULATIONS

LEFT SIDE WALL: (ATLANTIC BLVD.)

116'-8" (BUILDING LENGTH) x 16'-10" (ROOF HEIGHT) = 1,963.38 SQ.FT. BUILDING FACADE

1,963.38 SQ.FT. BUILDING FACADE x 30% GLAZING REQUIRED = 589.01 SQ. FT. REQ.

48'-8" (STOREFRONT GLASS LENGTH) x 12'-2" (STOREFRONT HEIGHT) = 591.70 SQ. FT GLAZING PROVIDED

ROOF HEIGHT

1/8" = 1'-0"

EXTERIOR WALL ELEVATIONS

1. PREFINISHED TWO PIECE COMPRESSION TRIM COLOR: DURO-LAST "DARK BRONZE"
2. SPLIT FACE CONCRETE MASONRY UNITS SEE PAINT DETAIL SCHEME THIS SHEET
3. WALL MOUNTED LIGHT FIXTURE – BRONZE FINISH
4. PIPE GUARD WITH ARCHITECTURAL BROWN SLEEVE
5. MFG. WHITE EXTERIOR INSULATED FINISH COLOR: SW 6091 "RELIABLE WHITE"
6. PAINT MAN DOOR SW 6088 "NUTHATCH" METAL FRAMES SW 6088 NUTHATCH
7. OVERHEAD DOOR – DO NOT PAINT PAINT ANGLES SW 6088 "HUTHATCH"
8. EXPANSION JOINT
9. ALUMINUM STOREFRONT SYSTEM – BRONZE FINISH TINTED GLASS WINDOWS "VISIBLE LIGHT TRANSMITTANCE = 30%"
10. GLASS AND ALUMINUM DOORS – CLEAR ANODIZED FINISH
11. CMU BLOCK W/ STUCCO FINISH – SEE PAINT SCHEME DETAIL THIS SHEET
12. DECORATIVE FOAM CORNICE COLOR: SW 6091 "RELIABLE WHITE"
13. TOILET WALL VENTS PAINT TO MATCH WALL
14. STORE ADDRESS – 6" WHITE REFLECTIVE NUMBERS
15. 3'-4" WIDE CMU PILASTER (8" PROJECTION)
16. 3'-4" CMU PILASTER
17. FRONT WALL SIGN – 42" RED CHANNEL LETTERS
18. HVAC UNITS SCREENED BEHIND PARAPET WALL
19. 8" HIGH X 2" DEPTH FOAM BOARD TRIM W/ E.F.S.
20. 1" WIDE SCORED JOINT (TYP.)
21. SIDE WALL SIGN – 42" HIGH RED CHANNEL LETTERS WITH ORANGE STRIPES
22. SCUPPERS AND DOWNSPOUTS. PAINTED TO MATCH BACKGROUND WALL COLOR. ADJACENT 4" H. X 6" W. OVERFLOW SCUPPER. FLOWLINE 2" ABOVE ROOF.
23. 4'-0" DEPTH FLAT METAL AWNING COLOR: DARK BONZE
24. N/A
25. (4) 8" X 8" GLAZED CERAMIC TILE RECESSED 1/2" COLOR: DARK BRONZE
26. N/A
27. N/A
28. N/A
29. 3'-2" HIGH X 3'-2" DEPTH SLOPED METAL STANDING SEAM AWNING COLOR: DARK BONZE

1 ELEVATION KEY NOTES

COLORS:
SHERWIN WILLIAMS "RELIABLE WHITE" – SW 6091
SHERWIN WILLIAMS "SAND DUNE" – SW 6086
SHERWIN WILLIAMS "HUTHATCH" – SW 6088

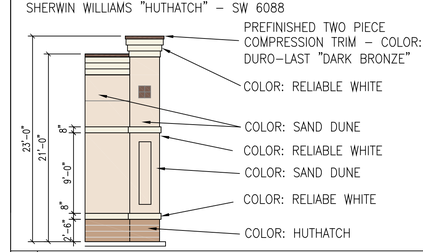

2 EXTERIOR WALL COLOR SCHEME

GENERAL NOTES:

1. REFER TO SECTIONS 09800 AND 09900 OF THE SPECIFICATIONS FOR PAINT AND EXTERIOR COATINGS.
2. PAINT RESTROOM WALL VENTS TO MATCH THE ADJACENT WALL COLOR.
3. SEALANT AT EXPANSION JOINTS TO MATCH ADJACENT WALL COLOR.
4. ALL MASONRY JOINTS TO BE CONCAVE TOOLED.

3 GENERAL NOTES

SIGNAGE NOTES:

1. GENERAL CONTRACTOR SHALL RECIEVE AND INSTALL OWNER FURNISHED WALL MOUNTED SIGN IN THE LOCATIONS INDICATED ON THE DRAWINGS. SIGN IS INTERNALLY ILLUMINATED.
2. CONTRACTOR SHALL BE RESPONSIBLE FOR OBTAINING ALL REQUIRED PERMITS.
3. INSTALL SIGN AND ANCHORAGE IN ACCORDANCE WITH ATTACH[illegible]GN MANUFACTURER'S DRAWINGS. SEE SN-1
4. SEE SHEET E3 FOR LOCATIONS OF J-BOXES TERMINATING [illegible] SIGN CIRCUIT.

4 SIGNAGE NOTES – BUILDING

AUTOZONE STORES LLC
123 South Front St, 3rd Floor
Memphis, Tennessee 38103
TEL: (901) 495-8701 FAX: (901) 495-8969

Prepared For: AutoZone STORE DEVELOPMENT
Store No. 6365
3001 WEST ATLANTIC AVE
POMPANO BEACH, FL 33096

COLOR ELEVATIONS

REVISIONS
1.
2.
3.
4.

SCALE: 1/8" = 1'-0"

George W Callow AR00141 55 State of Florida
Digitally signed by George W Callow AR0014155 State of Florida Date: 2020.01.28 15:03:52 -06'00'

DATE
03/09/17

PROTOTYPE SIZE
7N2

E1

AAC
PZ20-12000007
2/2/21

AAC
PZ20-12000007
03/03/2020

COPYRIGHT 1997