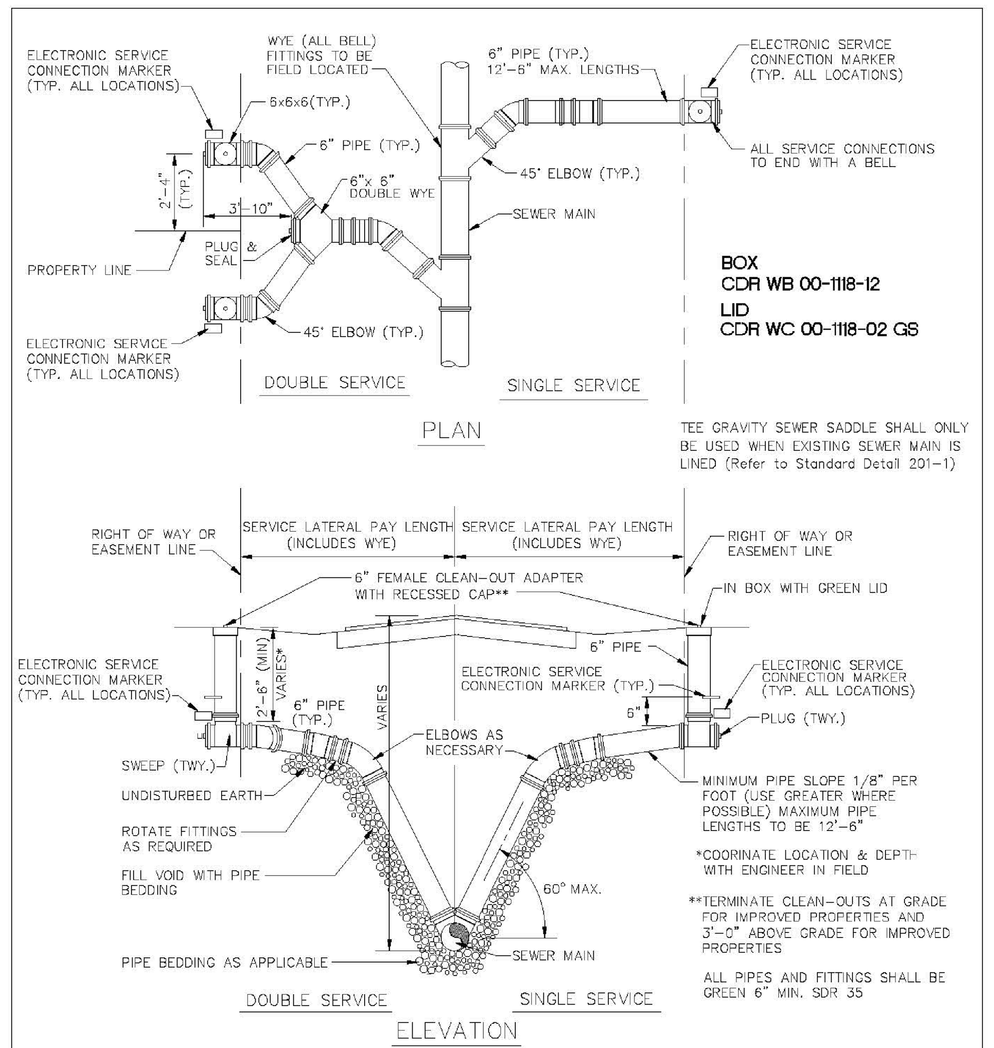


## SERVICE LATERALS WITH RISERS

ENGINEERING STANDARDS 2022

| REVISIONS | | ENGINEERING DIVISION CITY OF POMPANO BEACH | SERVICE LATERALS |
|---|---|---|---|
| BY | DATE | | |
| T.W. | 11-2007 | | DATE: JUNE 2022 |
| S.S. | 01/27/12 | | DWG. NO. 200-1 |
| S.S. | 07/10/12 | | |
| S.S. | 02/05/16 | SCALE: N.T.S. | |

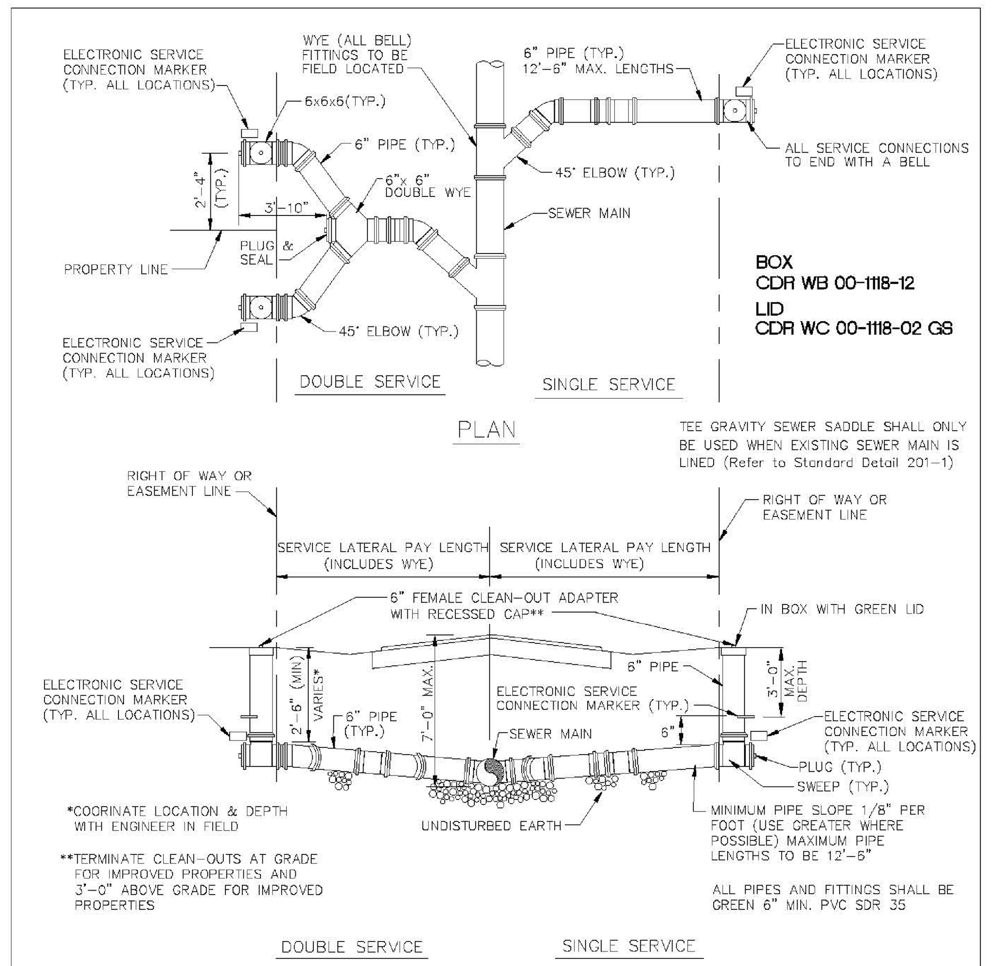


## SHALLOW SERVICE LATERALS

ENGINEERING STANDARDS 2022

| REVISIONS | | ENGINEERING DIVISION CITY OF POMPANO BEACH | SERVICE LATERALS |
|---|---|---|---|
| BY | DATE | | |
| T.W. | 11-2007 | | DATE: JUNE 2022 |
| S.S. | 01/27/12 | | DWG. NO. 200-2 |
| S.S. | 07/10/12 | | |
| S.S. | 02/10/16 | SCALE: N.T.S. | |

**INLET: GASKETED BELL - SDR 35 PVC**

Base Casting is ASTM A-48 Class 30 Cast Iron (Various Contours available to fit 6.275" - 30.00" O.D. Mains)

PVC Adapter is an ASTM D3034, SDR-35 Gasketed Bell

Adapter is cemented permanently in place with two-part urethane adhesive

Base of Saddle is dip-coated in a Waterbased Bituminous Coating

Strap is 24 ga. x 2.5" wide Type 304 Stainless Steel

Strap Pins are .75" dia. Type 303 Stainless Steel

T-Bolts are .375" - 16 Type 304 Stainless Steel

Nuts and Washers are Type 18-8 Stainless Steel

O-Ring is ASTM C-361-77 Tubular Polyisoprene

4" inlet requires a 4" dia. Tap in the Sewer Main

6" inlet requires a 6" dia. Tap in the Sewer Main (Sewer Main must be at least 8" dia.)

Note: This Dwg. supercedes Dwg. No. R-3408-D2

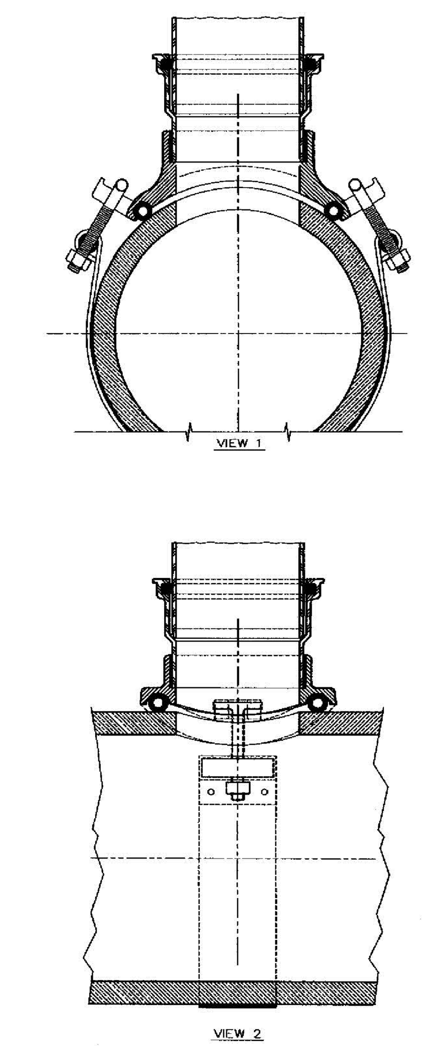


## TEE GRAVITY SEWER SADDLE

TO BE USED WHEN A SEWER MAIN HAS BEEN LINED WITH A CURED IN PLACE MATERIAL.

ENGINEERING STANDARDS 2022

| REVISIONS | | ENGINEERING DIVISION CITY OF POMPANO BEACH | TEE GRAVITY SEWER SADDLE |
|---|---|---|---|
| BY | DATE | | |
| S.S. | 11/23/16 | | DATE: MAY 2022 |
| | | | DWG. NO. 201-1 |
| | | SCALE: N.T.S. | |

**INLET: GASKETED BELL - SDR-35 PVC**

Base Casting is ASTM A-48 Class 30 Cast Iron (Various Contours available to fit 6.275" - 30.00" O.D. Mains)

PVC Adapter is an ASTM D3034, SDR-35 Gasketed Bell

Castings and Adapter cemented permanently in place with two-part urethane adhesive

Base of Saddle dip-coated in Waterbased Bituminous Coating

Strap is 24 ga. X 2.5" wide Type 304 Stainless Steel

Strap Pins are .75" dia. Type 303 Stainless Steel

T-Bolts are .375" - 16 Type 304 Stainless Steel

Nuts and Washers are Type 18-8 Stainless Steel

O-Ring is ASTM C-361-77 Tubular Polyisoprene

4" inlet requires a 4" x 6.50" oval tap in the Sewer Main

6" inlet requires a 6" x 9.25" oval tap in the Sewer Main (Sewer Main must be at least 8" dia.)

Note: This Dwg. supercedes Dwg. No. R-3157-D1

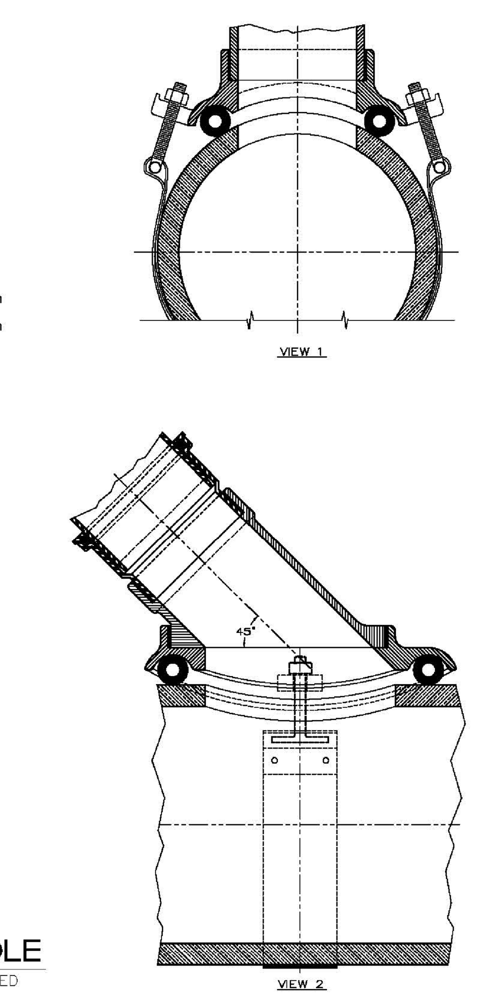


## WYE GRAVITY SEWER SADDLE

TO BE USED WHEN A SEWER MAIN HAS BEEN LINED WITH A CURED IN PLACE MATERIAL.

ENGINEERING STANDARDS 2022

| REVISIONS | | ENGINEERING DIVISION CITY OF POMPANO BEACH | WYE GRAVITY SEWER SADDLE |
|---|---|---|---|
| BY | DATE | | |
| | | | DATE: MAY 2022 |
| | | | DWG. NO. 201-2 |
| | | SCALE: N.T.S. | |

DRC

PZ23-12000009

03/05/2025

## Adjustable Repair Coupling

### NOTES

- Synthetic rubber gasket is strong, durable and resilient to ultraviolet rays, ozone, fungus growth and normal sewer gases. More pliable and easier to install in cold weather applications than an Elastomeric PVC gasket.
- Sealing "O" rings under the clamp prevent pipe slippage and create a more positive seal.
- More transition couplings for dissimilar pipe types and sizes are comprised of a one-piece transition gasket, eliminating the use of bushings that are difficult to install and easy to lose on the job site.
- Surgical Grade 316 stainless steel Nut & Bolt clamps are corrosion resistant, providing outstanding protection in severe environments such as marine applications, poorly aerated or moist soils, contaminated ground conditions (particularly industrial fill sites) and where the ground water contains chloride, sulfates or bicarbonates. Increased band tension of the Nut & Bolt clamp ensures a leak-proof, root-proof seal that is resistant to both infiltration and exfiltration.
- Series 300 stainless steel shear band is the heaviest in the industry, over 33% thicker than the competition.
- Broadest range of couplings on the market in sizes ranging from 1½" to 96" in diameter. Used for the alteration and rehabilitation of gravity-flow sewage pipes made of clay, cast iron, plastic, concrete, ductile iron, asbestos cement, fiber cement and truss pipe.

Specification:
Furnish and install stainless steel shielded sewer couplings, as manufactured by Mission Rubber Company. Coupling to meet ASTM C 1173. Gasket to meet ASTM C 425 Table 2, to be rubber and be environmentally certified. Series 300 stainless steel shear band with a minimum thickness of .012", surgical grade 316 stainless steel clamps with nut & bolt take up, shear ring and clamps to meet all requirements of ASTM A 240. All stainless steel parts and clamping mechanisms to be **manufactured in the U.S.A.** Transitional sizes to utilize a one piece gasket.

## ADJUSTABLE REPAIR COUPLING PVC/CLAY NOTES

ENGINEERING STANDARDS 2022

| REVISIONS | | ENGINEERING DIVISION CITY OF POMPANO BEACH | ADJUSTABLE REPAIR COUPLING |
|---|---|---|---|
| BY | DATE | | |
| | | | DATE: MAY 2022 |
| | | | DWG. NO. 202-1 |
| | | SCALE: N.T.S. | |

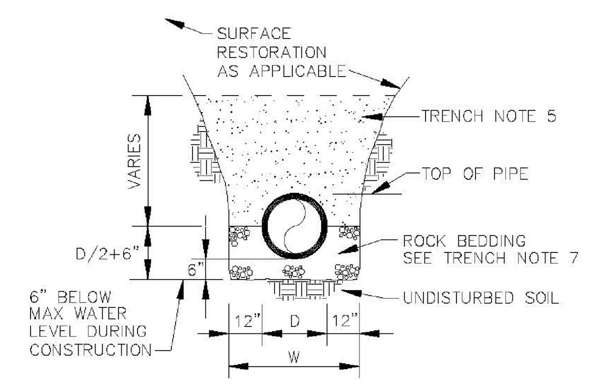


## TRENCH BACKFILL / BEDDING CLASS " B "

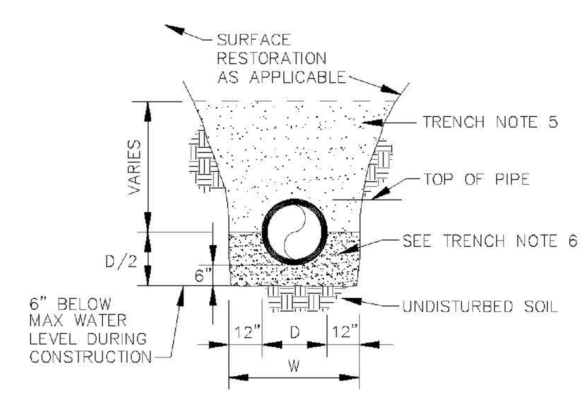


## TRENCH BACKFILL / BEDDING CLASS " A "

ENGINEERING STANDARDS 2022

| REVISIONS | | ENGINEERING DIVISION CITY OF POMPANO BEACH | TRENCH BACKFILL / BEDDING |
|---|---|---|---|
| BY | DATE | | |
| S.S. | JUNE 2005 | | DATE: JUNE 2022 |
| | | | DWG. NO. 203-1 |
| | | SCALE: N.T.S. | |

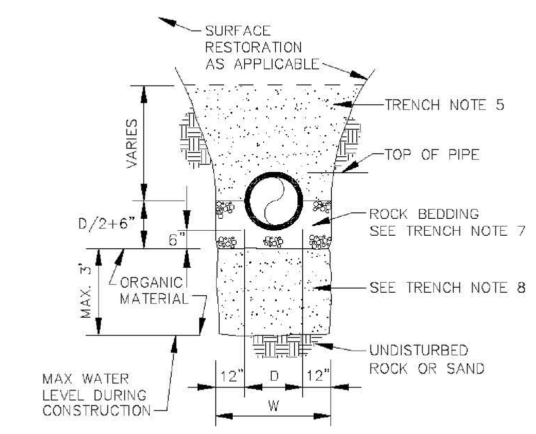


## TRENCH BACKFILL / BEDDING CLASS " C "

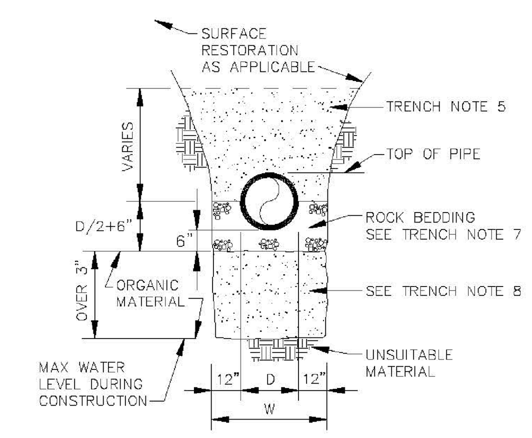


## TRENCH BACKFILL / BEDDING CLASS " D "

ENGINEERING STANDARDS 2022

| REVISIONS | | ENGINEERING DIVISION CITY OF POMPANO BEACH | TRENCH BACKFILL / BEDDING |
|---|---|---|---|
| BY | DATE | | |
| S.S. | JUNE 2005 | | DATE: JUNE 2022 |
| | | | DWG. NO. 203-2 |
| | | SCALE: N.T.S. | |

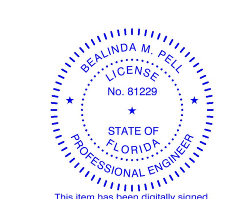


This item has been digitally signed, sealed, and dated by:

Printed copies of this document are not considered signed and sealed and must be verified on any electronic copies.

Digitally signed by Bealinda M Pell
DN: c=US, o=Unaffiliated, dnQualifier=A01410C0000018E2E72B6AA0002F1E5, cn=Bealinda M Pell
Date: 2025.01.16 17:43:32 -05'00'

811 Know what's **below.** **Call** before you dig.

| NO. | REVISIONS | DATE | NO. | REVISIONS | DATE |
|---|---|---|---|---|---|

DESIGNED: WFI DATE: 01/2023
DRAWN: WFI DATE: 01/2023
CHECKED: BMP DATE: 11/2023
PUBLISHED: 10/21/2024, 4:36:54 PM

WINNINGHAM & FRADLEY
ENGINEERS • PLANNERS • SURVEYORS
111 N.E. 44th STREET • OAKLAND PARK, FL 33334
954.771.7440 fax: 954.771.0298 • EB,LB: 0002995 • www.winnfrad.com

PALM AIRE TENNIS CENTER
RWB / LINARES ARCHITECTURE

CITY OF POMPANO BEACH
STANDARD SANITARY DETAILS

APPROVED: EB-0002995 LB-0002995
DATE:
PROJECT NUMBER 22036
SHEET SD1 OF 2

J:\2022\22036-Palm Aire Tennis Courts\CAD\SPVI-COPB_Sewer Details01.dgn(Default)