DRC
PZ22-12000042
02/01/2023

BROWARD COUNTY
PUBLIC WORKS DEPARTMENT

WATER & WASTEWATER SERVICES
ENGINEERING DIVISION
2555 WEST COPANS ROAD
POMPANO BEACH, FL 33069
PHONE NO. 954-831-0745
FAX: 954-831-0925

STANDARD DETAIL

WATER MAIN SEPARATION IN ACCORDANCE WITH F.A.C. RULE 62-555.314

OTHER PIPE	HORIZONTAL SEPARATION	CROSSINGS (1) (4)	JOINT SPACING @ CROSSINGS (FULL JOINT CENTERED)
STORM SEWER, STORM WATER FORCE MAIN, RECLAIMED WATER (2)	Water Main — 3 ft. minimum	Water Main — 12 inches is the minimum, except for gravity sewer, then 6 inches is the minimum and 12 inches is preferred	Alternate 3 ft. minimum — Water Main
VACUUM SANITARY SEWER	Water Main — 10 ft. preferred 3 ft. minimum	Water Main — 12 inches preferred 6 inches min	Alternate 3 ft. minimum — Water Main
GRAVITY SANITARY SEWER (3) SANITARY SEWER FORCE MAIN, RECLAIMED WATER	Water Main — 10 ft. preferred 6 ft. minimum	Water Main — 12 inches is the minimum, except for gravity sewer, then 6 inches is the minimum and 12 inches is preferred	Alternate 6 ft. minimum — Water Main
ON-SITE SEWAGE TREATMENT & DISPOSAL SYSTEM	10 ft. minimum	—	—

(1) WATER MAIN SHOULD CROSS ABOVE OTHER PIPE. WHEN WATER MAIN MUST BE BELOW OTHER PIPE, THE MINIMUM SEPARATION IS 12 INCHES.
(2) RECLAIMED WATER REGULATED UNDER PART III OF CHAPTER 62-610, F.A.C.
(3) 3 FT. FOR GRAVITY SANITARY SEWER WHERE THE BOTTOM OF THE WATER MAIN IS LAID AT LEAST 6 INCHES ABOVE THE TOP OF THE GRAVITY SANITARY SEWER.
(4) 18" VERTICAL MINIMUM SEPARATION REQUIRED BY WWS, UNLESS OTHERWISE APPROVED.

REVISED	WATER MAIN SEPARATION	FIGURE
7/7/2021		105

BROWARD COUNTY
PUBLIC WORKS DEPARTMENT

WATER & WASTEWATER SERVICES
ENGINEERING DIVISION
2555 WEST COPANS ROAD
POMPANO BEACH, FL 33069
PHONE NO. 954-831-0745
FAX: 954-831-0925

STANDARD DETAIL

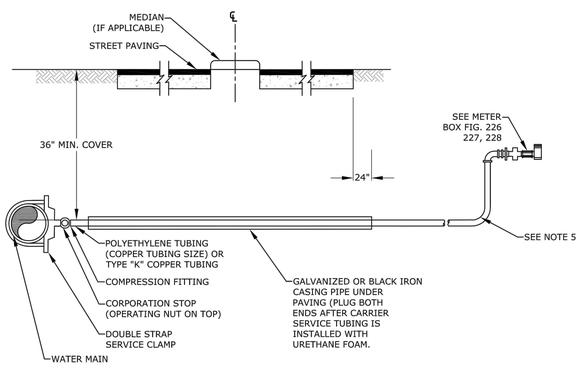

NOTES:

1. SUCCESSIVE TAPS INTO THE WATER MAIN SHALL BE SPACED NOT LESS THAN 18" ON CENTER. NO TAPS SHALL BE CLOSER THAN 18" TO A JOINT.
2. 1" SERVICES REQUIRE A 2" MINIMUM INSIDE DIAMETER CASING PIPE.
3. 2" SERVICES REQUIRE A 3" MINIMUM INSIDE DIAMETER CASING PIPE.
4. ALL CASING PIPE SHALL EXTEND A MINIMUM OF 2' BEYOND THE EDGE OF PAVED STREETS.
5. FOR 1" SERVICE LINES THE MINIMUM RADIUS SHALL BE 14". FOR 2" SERVICE LINES THE MINIMUM RADIUS SHALL BE 21".
6. ALL CASING PIPE ENDS SHALL BE FILED SMOOTH WITH NO BURRS AND SEALED WITH URETHANE FOAM.
7. THE POLYETHYLENE OR COPPER TUBING SHALL BE ONE CONTINUOUS PIECE FROM THE CORPORATION STOP TO THE CHECK VALVE. NO JOINTS WILL BE PERMITTED BETWEEN THESE POINTS.

THIS DETAIL APPLIES ONLY TO COUNTY ARTERIAL AND COLLECTOR ROADS (70' TO 120' R/W) AND ALL STATE ROAD R/W

REVISED	TYPE 2 WATER SERVICE CONNECTION	FIGURE
7/7/2021		222

BROWARD COUNTY
PUBLIC WORKS DEPARTMENT

WATER & WASTEWATER SERVICES
ENGINEERING DIVISION
2555 WEST COPANS ROAD
POMPANO BEACH, FL 33069
PHONE NO. 954-831-0745
FAX: 954-831-0925

STANDARD DETAIL

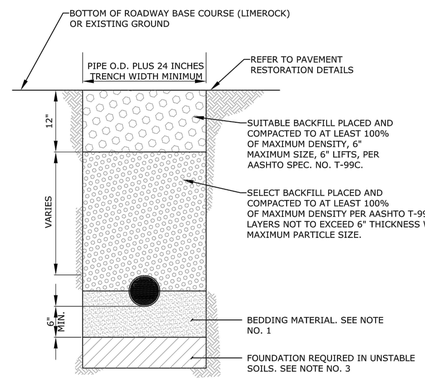

NOTES:

1. UNLESS OTHERWISE SPECIFIED, BEDDING MATERIAL SHALL CONSIST OF SELECT BACKFILL MATERIAL 2" MAXIMUM PARTICLE SIZE, COMPACTED TO AT LEAST 100% OF MAX. DENSITY, 6" LIFTS, PER AASHTO SPEC. NO. T-99C.
2. WHERE REQUIRED, SHEETING AND SHORING SHALL BE IN ACCORDANCE WITH OSHA REQUIREMENTS.
3. WHERE UNSTABLE SOILS ARE ENCOUNTERED, INCLUDING PEAT, MUCK OR OTHER ORGANIC SOILS, ELASTIC SILT AND CLAYS, A FOUNDATION IS REQUIRED AS DETERMINED BY THE ENGINEER OF RECORD.

REVISED	TYPICAL TRENCH BACKFILL	FIGURE
7/7/2021		180

BROWARD COUNTY
PUBLIC WORKS DEPARTMENT

WATER & WASTEWATER SERVICES
ENGINEERING DIVISION
2555 WEST COPANS ROAD
POMPANO BEACH, FL 33069
PHONE NO. 954-831-0745
FAX: 954-831-0925

STANDARD DETAIL

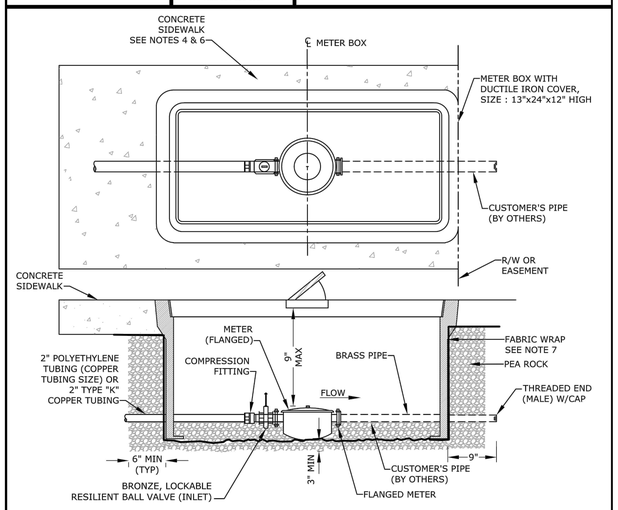

METER SIZE	LAYING LENGTH (IN)	HEIGHT (IN)
1 ½"	13	6 ⅞"
2"	17	7 $^{17}/_{32}$"

1. ALL STRUCTURES TO BE TRAFFIC BEARING TYPE.
2. CURVE IN SERVICE LINE SHALL BE AS CLOSE TO METER BOX AS PRACTICAL, WITH A MINIMUM RADIUS SHALL BE 21" FOR 2" TUBING.
3. ALL METERS WILL BE SUPPLIED AND INSTALLED BY WWS. METERS ARE FLANGED.
4. WHEN SIDEWALKS ARE PRESENT, OR PLANNED FOR IN THE R/W, THE BACK EDGE OF THE METER BOX SHALL LINE UP WITH THE BACK EDGE OF THE SIDEWALK.
5. METER SHALL BE CENTERED IN BOX DIRECTLY UNDER THE ACCESS LID.
6. WHEN THERE ARE NO SIDEWALKS, CONSTRUCT 6" WIDE x 6" THICK CONCRETE COLLAR AT GRADE.
7. AT BOTH PIPE PENETRATIONS THROUGH THE FABRIC WRAP, THE FABRIC SHALL BE PULLED TIGHT AROUND THE PIPE AND SECURED WITH TWO GRADE 316 STAINLESS STEEL HOSE CLAMPS TO PROVIDE A TIGHT SEAL AROUND PIPE.

REVISED	WATER METER INSTALLATION FOR 1 ½" OR 2" METERS	FIGURE
7/7/2021		228

BROWARD COUNTY
PUBLIC WORKS DEPARTMENT

WATER & WASTEWATER SERVICES
ENGINEERING DIVISION
2555 WEST COPANS ROAD
POMPANO BEACH, FL 33069
PHONE NO. 954-831-0745
FAX: 954-831-0925

STANDARD DETAIL

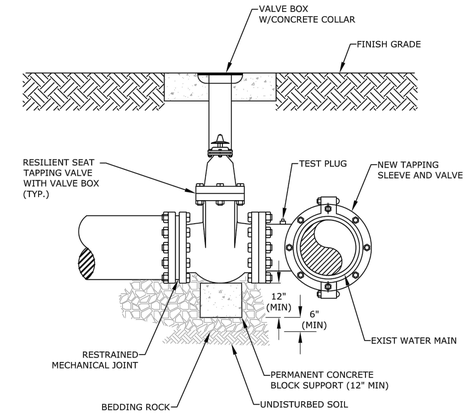

NOTES:

1. REFER TO WWS MINIMUM DESIGN AND CONSTRUCTION STANDARDS FOR MINIMUM REQUIREMENTS AND PRE-APPROVED MANUFACTURERS.
2. MAIN SHALL BE CLEANED BEFORE ATTACHING SLEEVE
3. SLEEVE AND VALVE SHALL BE PRESSURE TESTED BEFORE MAKING TAP. PRESSURE TEST AND TAP SHALL BE MADE IN PRESENCE OF AN AUTHORIZED COUNTY REPRESENTATIVE.
4. TAP SHALL BE MADE NO CLOSER THAN 18" FROM THE NEAREST JOINT.
5. CONCRETE BLOCK SHALL COMPLETELY SUPPORT TAPPING VALVE.
6. RESTRAINT JOINT REQUIREMENTS SHALL BE IN ACCORDANCE WITH WWS MINIMUM DESIGN AND CONSTRUCTION STANDARDS.

REVISED	TAPPING SLEEVE AND VALVE INSTALLATION	FIGURE
7/7/2021		196

BROWARD COUNTY
PUBLIC WORKS DEPARTMENT

WATER & WASTEWATER SERVICES
ENGINEERING DIVISION
2555 WEST COPANS ROAD
POMPANO BEACH, FL 33069
PHONE NO. 954-831-0745
FAX: 954-831-0925

STANDARD DETAIL

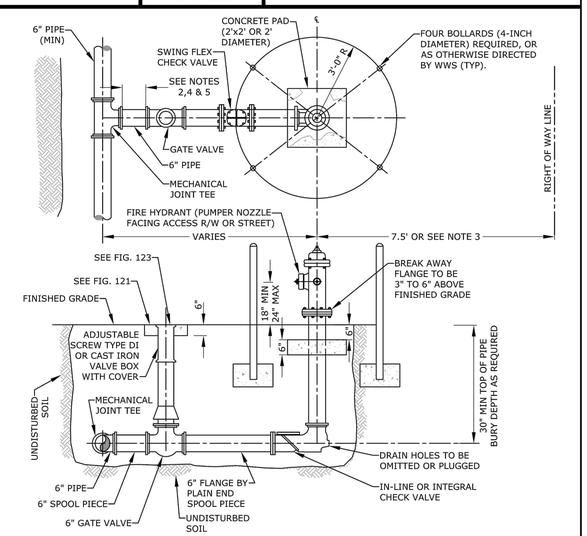

1. HYDRANT COATED WITH OSHA SAFETY YELLOW REFLECTIVE PAINT.
2. USE RESTRAINED JOINTS FOR THE ENTIRE ASSEMBLY SHOWN.
3. HYDRANT SET BACK SHALL CONFORM TO FDOT AND BCHCED REQUIREMENTS, WHERE APPLICABLE.
4. GATE VALVE IS NORMALLY LOCATED NEXT TO TEE.
5. IF DISTANCE FROM MAIN LINE TO FIRE HYDRANT IS GREATER THAN 20 FEET ANOTHER GATE VALVE WILL BE PROVIDED CLOSE TO THE HYDRANT. THIS SECOND VALVE SHALL BE INSTALLED WITHIN 5' OF THE FIRE HYDRANT. CHECK VALVE SHALL BE WITHIN 3' OF FIRE HYDRANT UNLESS CHECK VALVE INTEGRAL TO HYDRANT ASSEMBLY.
6. HYDRANT FEED PIPE MAY BE TAPPED FOR A SERVICE LINE UPSTREAM OF THE ISOLATION GATE VALVE.
7. A BLUE RAISED REFLECTIVE PAVEMENT MARKER SHALL BE PLACED AT THE CENTER LINE OF THE OUTSIDE ROADWAY LANE TO IDENTIFY THE FIRE HYDRANT LOCATION.

REVISED	FIRE HYDRANT INSTALLATION	FIGURE
7/7/2021		231

KEITH
301 East Atlantic Blvd.
Pompano Beach, FL 33060
PH: (954) 788-3400
Florida Engineering Business License: CA7928
Florida Surveyor and Mapper Business License: LB6860
Florida Landscape Architecture Business License: LC26000457

REVISIONS

NO.	DESCRIPTION	DATE

RESPONSIBILITY FOR THE USE OF THESE PLANS PRIOR TO OBTAINING PERMITS FROM ALL AGENCIES HAVING JURISDICTION OVER THE PROJECT WILL FALL SOLELY UPON THE USER.

ISSUE DATE:	09/15/22
DESIGNED BY:	JW
DRAWN BY:	NW/SS/FA
CHECKED BY:	TD
BID-CONTRACT:	

This item has been digitally signed and sealed by Thomas F. Donahue, P.E. on the date below using a Digital Signature.

Printed copies of this document are not considered signed and sealed and the signature must be verified on any electronic copies.

2022.12.27 10:53:27-05'00'

THOMAS F. DONAHUE LICENSE No. 60529 STATE OF FLORIDA PROFESSIONAL ENGINEER

THOMAS F. DONAHUE, P.E.
FLORIDA REG. NO. 60529
(FOR THE FIRM)

CLIENT
FIRST INDUSTRIAL REALITY TRUST

PROJECT
FIRST POMPANO LOGISTICS CENTER I
2551 NW 19TH ST POMPANO BEACH, FL 33069

SHEET TITLE
WATER AND SEWER DETAILS

SHEET NUMBER	CU-501
PROJECT NUMBER	12901.01

STATUS: PRELIMINARY