DRC
PZ24-12000011
07/17/2024

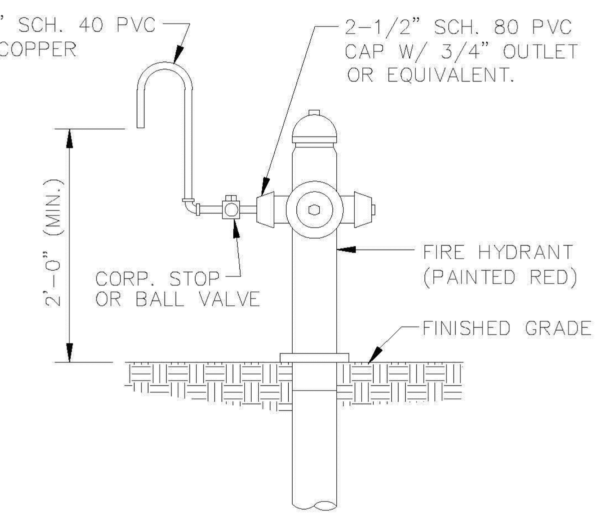

SAMPLE POINT (HYDRANT)

ALL POMPANO BEACH HYDRANTS SHALL BE PAINTED RED.

ALL D.I.P. TO BE PAINTED BLUE ON TOP HALF OF PIPE.

ENGINEERING STANDARDS 2022

REVISIONS		ENGINEERING DIVISION CITY OF POMPANO BEACH	SAMPLE POINT (HYDRANT)
BY	DATE		
S.S.	04-2005	SCALE: N.T.S.	DATE: MAY 2022 DWG. NO. 101-1

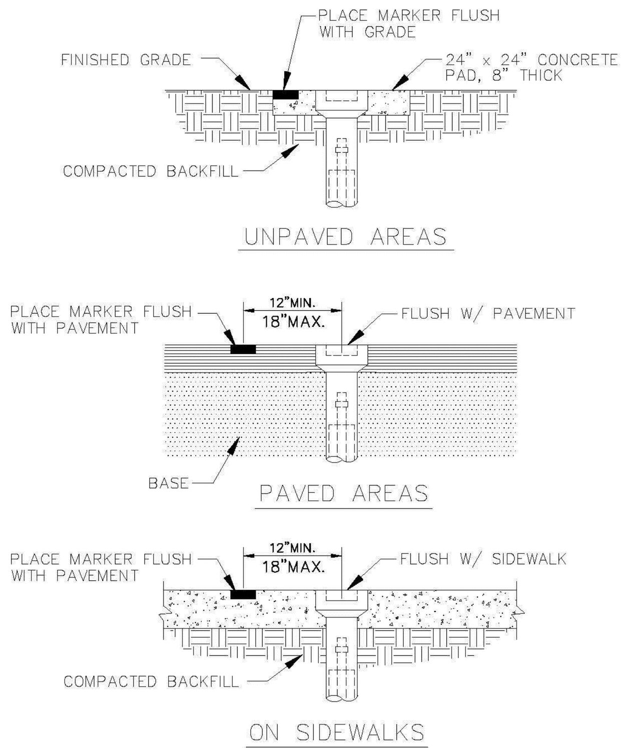

VALVE BOX SETTINGS

ENGINEERING STANDARDS 2022

REVISIONS		ENGINEERING DIVISION CITY OF POMPANO BEACH	VALVE BOX SETTINGS
BY	DATE		
S.S.	04-2005	SCALE: N.T.S.	DATE: MAY 2022 DWG. NO. 102-1

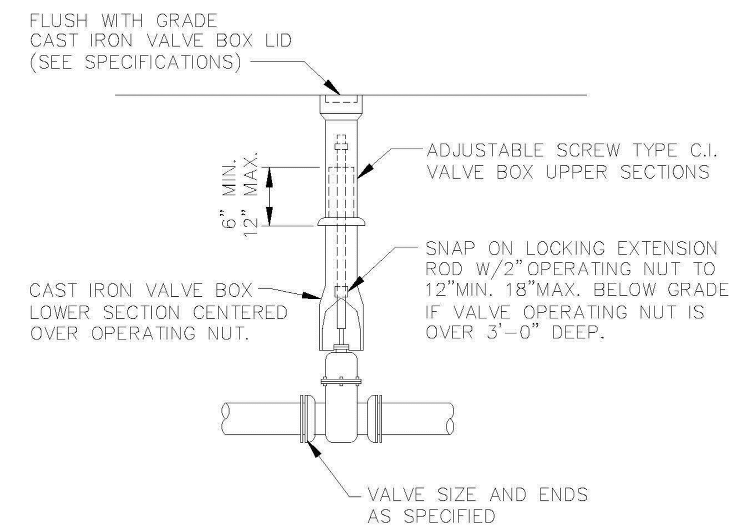

GATE OR PLUG VALVE SETTING

USE MEGALUGS AT ALL PIPE JOINTS

ALL D.I.P. TO BE PAINTED BLUE ON TOP HALF OF PIPE.

ENGINEERING STANDARDS 2022

REVISIONS		ENGINEERING DIVISION CITY OF POMPANO BEACH	GATE OR PLUG VALVE SETTINGS
BY	DATE		
S.S.	04-2005		
T.W.	11-2007	SCALE: N.T.S.	DATE: MAY 2022 DWG. NO. 103-1

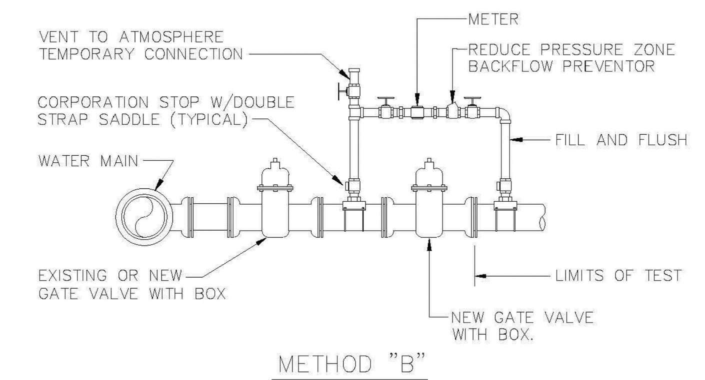

METHOD "B"

NOTES:

1. WATER MAIN TO BE PRESSURE TESTED AND DISINFECTED ACCORDING TO BROWARD COUNTY PUBLIC HEALTH UNIT REGULATIONS, AWWA, AND MUNICIPAL SPECIFICATIONS IN EFFECT.
2. BACTERIOLOGICAL TESTS ARE TO BE PERFORMED BY THE CONTRACTOR AND AN APPROVED TESTING LABORATORY.
3. REMOVE TEMPORARY CONNECTION AT SADDLE ON NEW MAINS AFTER FILLING AND FLUSHING HAS BEEN COMPLETED AND REPLACE WITH BRASS PLUG
4. PROVIDE ALL NECESSARY THRUST BLOCKS OR OTHER RESTRAINTS.
5. FILLING AND FLUSHING LOCATIONS SHALL BE COORDINATED BY THE CONTRACTOR, ENGINEER, AND CITY.
6. VENT TO ATMOSPHERE SHALL REMAIN OPEN DURING ALL PHASES OF PRESSURE TESTING.
7. AFTER COMPLETION FILL AND FLUSH CONNECTION
8. USE MEGALUGS AT ALL PIPE JOINTS

FILLING AND FLUSHING CONNECTION

ALL D.I.P. TO BE PAINTED BLUE ON TOP HALF OF PIPE.

ENGINEERING STANDARDS 2022

REVISIONS		ENGINEERING DIVISION CITY OF POMPANO BEACH	FILLING / FLUSHING CONNECTION
BY	DATE		
S.S.	04-2005		
T.W.	11-2007		
S.S.	01-2012	SCALE: N.T.S.	DATE: MAY 2022 DWG. NO. 104-1

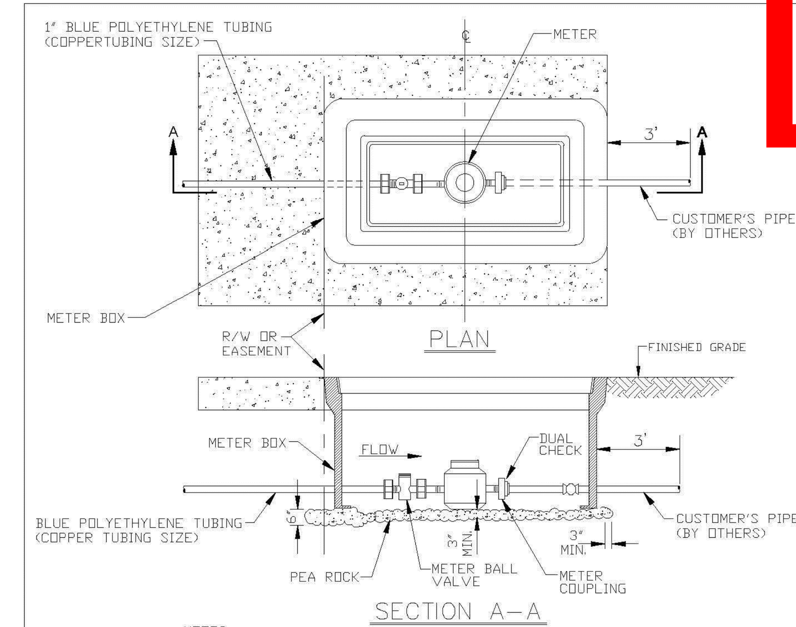

NOTES:

1. ALL METERS WILL BE SUPPLIED AND INSTALLED BY COPB UTILITIES METER HAS IRON PIPE THREAD MALE CONNECTION ON EACH END.
2. METER SHALL BE CENTERED IN BOX.
3. DUAL CHECK IS SAME SIZE AS CUSTOMER'S SERVICE LINE.

METER SIZE	LAYING LENGTH (IN)	HEIGHT (IN)
5/8"	7.5	4.56
1"	10.75	5.75

METER BOX INSTALLATION

ENGINEERING STANDARDS 2022

REVISIONS		ENGINEERING DIVISION CITY OF POMPANO BEACH	METER BOX INSTALLATION FOR 5/8" AND 1" METERS
BY	DATE		
S.S.	11-2012	SCALE: N.T.S.	DATE: JAN. 2022 DWG. NO. 105-2

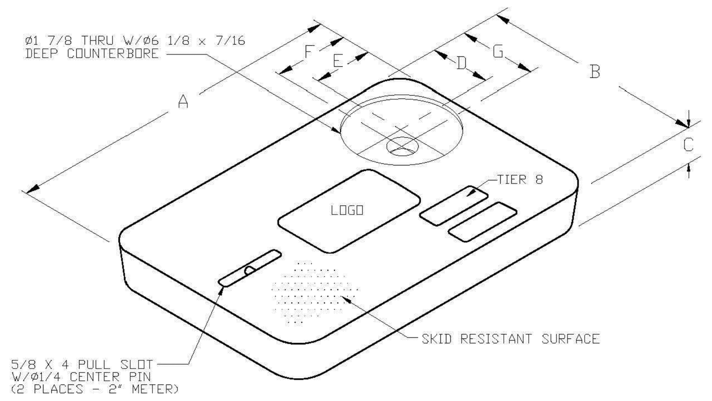

METER BOX COVER DIMENSIONS (IN)							
METER SIZE	A	B	C	D	E	F	G
1"	18 1/8"	11 1/4"	1 3/4"	3 3/4"	4"	4 9/16"	4 5/16"
1 1/2"	23 1/4"	13 3/4"	2"	4"	4"	4 9/16"	4 9/16"
2"	30 1/2"	17 1/2"	2"	4"	4"	4 9/16"	4 9/16"

NOTES

1. CUSTOMER IS CITY OF POMPANO BEACH FLORIDA LOGO TO BE SPECIFIED: CITY OF POMPANO BEACH POTABLE WATER
2. FITS NEPTUNE R450 ANTENNA
3. THIS COVER IS RATED FOR A STATIC DESIGN LOAD OF 8,000 LBS. (35,548 N) OVER A 10 (254) X 10 (254) AREA AND MUST PASS A MINIMUM STATIC TEST LOAD OF 12,000 LBS (53,376 N).
4. METER BOX COVER SHOULD BE RATED FOR TRAFFIC CONDITION AS DETERMINED BE ENGINEER OF RECORD.

POTABLE WATER METER BOX COVER

ENGINEERING STANDARDS 2022

REVISIONS		ENGINEERING DIVISION CITY OF POMPANO BEACH	TYPICAL METER BOX COVER
BY	DATE		
S.S.	11-2012	SCALE: N.T.S.	DATE: JAN. 2022 DWG. NO. 105-3

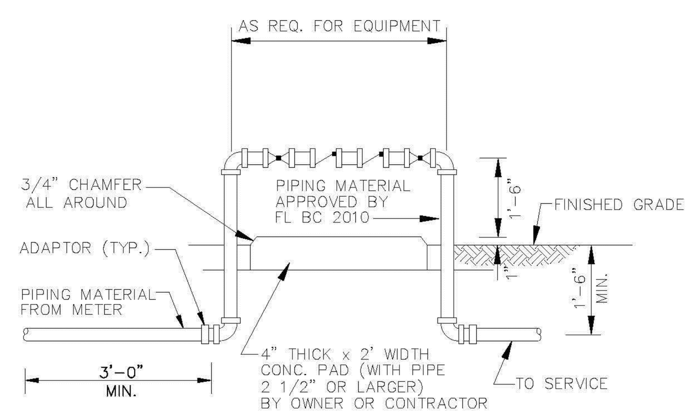

BACKFLOW PREVENTER

USE MEGALUGS AT ALL PIPE JOINTS 3" AND LARGER
PLEASE SEE METER INSTALL DIMENSION LIST ON STANDARD NO. 106-4
SMALL UNITS UNI-STRUT SUPPORT

ENGINEERING STANDARDS 2022

REVISIONS		ENGINEERING DIVISION CITY OF POMPANO BEACH	BACKFLOW PREVENTER
BY	DATE		
T.W.	04-2008		
S.S.	03-2009		
S.S.	11-2012		
S.S.	01-2013	SCALE: N.T.S.	DATE: MAY 2022 DWG. NO. 106-1

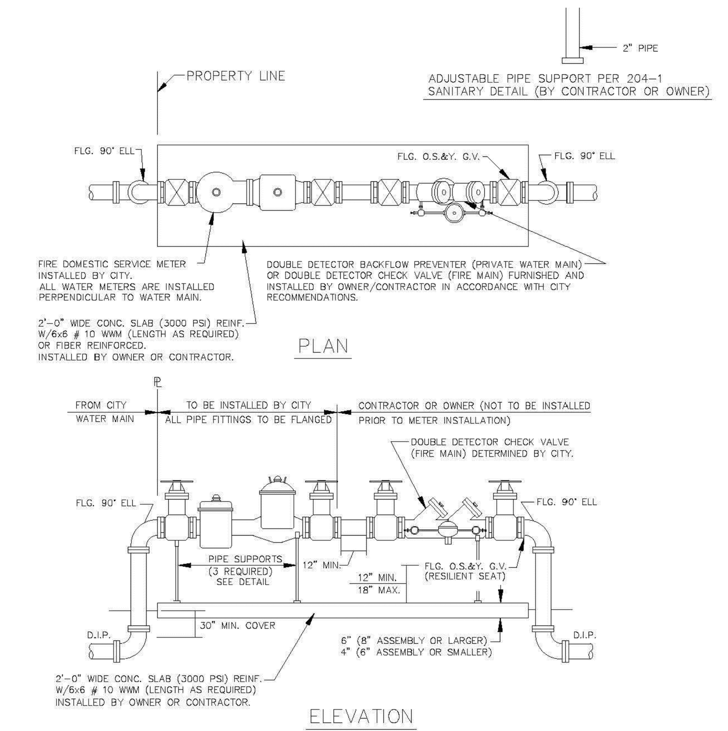

FIRE ONLY METER AND BACKFLOW DEVICE DETAILS

NOTES

1. THE BACKFLOW PREVENTOR FOR THE BY-PASS SHALL BE DDCV OR RPZ.
2. PLEASE NOTE THAT WATER METERS 3" AND LARGER ARE SUBJECT TO AN APPROXIMATE ORDER LEAD TIME OF 60 TO 75 DAYS AFTER FULL PAYMENT. PLEASE CONTACT CUSTOMER SERVICE AT 954-786-4637 TO ARRANGE FOR METER PROCUREMENT AND INSTALLATION.
3. USE MEGALUGS AT ALL PIPE JOINTS
4. PLEASE SEE METER INSTALL DIMENSION LIST ON STANDARD NO. 106-4

ENGINEERING STANDARDS 2022

REVISIONS		ENGINEERING DIVISION CITY OF POMPANO BEACH	FIRE ONLY METER AND BACKFLOW DEVICE
BY	DATE		
S.S.	05-2011		
S.S.	11-2012		
S.S.	12-2013		
S.S.	11-2016	SCALE: N.T.S.	DATE: MAY 2022 DWG. NO. 106-3

FIRE METERS - OS & Y VALVES, GASKETS & METER

(NEPTUNE MACH 10 Ultrasonic Meter)

SIZE	VALVES (2)	GASKETS (4)	METER w/ Strainer	TOTAL LENGTH
3" w/ 4" X 3" Reducer **	16"	1/2"	30" **	46 1/2"
4"	18"	1/2"	27 1/2"	46"
6"	21"	1/2"	33"	54 1/2"
8"	23"	1/2"	30"	53 1/2"
10"	26"	1/2"	41"	67 1/2"

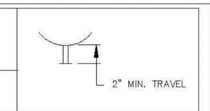

FIRE &/or Domestic Water SERVICE METERS - TEES, OS & Y VALVES, GASKETS & METERS

(NEPTUNE MACH 10 Ultrasonic Meter)

SIZE	TEES (2)	VALVES (2)	GASKETS (6)	Meter w/ Strainer	TOTAL LENGTH
3" w/ 4" X 3" Reducer **	3" X 3" - 22"	16"	3/4"	30" **	68 3/4"
4"	4" X 3" - 26"	18"	3/4"	27 1/2"	72 1/4"
6"	6" X 4" - 32"	21"	3/4"	33"	86 3/4"
8"	8" X 4" - 36"	23"	3/4"	30"	89 3/4"
10"	10" X 6" - 44"	26"	3/4"	41"	111 3/4"

*All fittings, valves and meters are flanged & all dimensions are from face of flange to face of flange.

NOTE:
PLEASE NOTE THAT WATER METERS 3" AND LARGER ARE SUBJECT TO AN APPROXIMATE ORDER LEAD TIME OF 60 TO 75 BUSINESS DAYS AFTER FULL PAYMENT. PLEASE CONTACT CUSTOMER SERVICE AT 954-786-4637 TO ARRANGE FOR METER PROCUREMENT AND INSTALLATION. LARGE METERS MUST BE AT MINIMUM ORDERED PRIOR TO INITIAL INSPECTIONS.

ENGINEERING STANDARDS 2022

REVISIONS		ENGINEERING DIVISION CITY OF POMPANO BEACH	METER INSTALL DIMENSION LIST
BY	DATE		
T.W.	02-2008		
S.S.	11-2016		
A.S.	01-2022	SCALE: N.T.S.	DATE: JAN. 2022 DWG. NO. 106-4

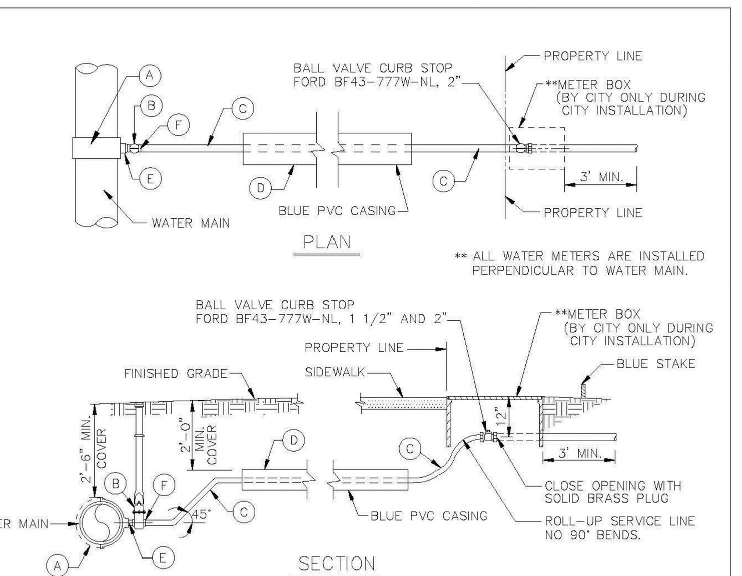

(A) 2" TAPPING SADDLE IRON PIPE THREADED FORD FC-202 OR EQUAL.
(B) 2" RESILIENT SEATED GATE VALVE CLOW F61-03 MUELLER A-23-60-8 2" OPERATING NUT BOXED TO GRADE - C.I. BOX
(C) 2" POLYETHYLENE BLUE
(D) 2 1/2" SCH. 40
(E) 2" X 3" BRASS NIPPLE
(F) 2" MIP COUPLING C-84-77 - PACK JOINT - CTS

TYPICAL 1 1/2" AND 2" WATER SERVICE

ENGINEERING STANDARDS 2022

REVISIONS		ENGINEERING DIVISION CITY OF POMPANO BEACH	TYPICAL 2" WATER SERVICE
BY	DATE		
S.S.	05-2011		
S.S.	05-2012		
S.S.	11-2018		
A.S.	08-2021	SCALE: N.T.S.	DATE: APRIL 2022 DWG. NO. 107-2

R E V I S I O N S

DATE	BY	DESCRIPTION

SDA ENGINEERING
ENGINEERING ○ SURVEYING ○ PLANNING
ENGINEERING AUTH. NO. 5634 SURVEYING LIC. NO. LB-6456
3410 N. Andrews Avenue Ext. ● Pompano Beach, Fl. 33064
PH: 954-943-9433 ● FAX: 954-783-4754

DRAWN BY: MJG
CHECKED BY: JFD
DESIGNED BY: MJG
APPROVED BY: S.D.A.
SCALE: N.T.S.

ATLANTIC ONE
MIXED-USE DEVELOPMENT
POMPANO BEACH, BROWARD COUNTY, FLORIDA
WATER AND SEWER DETAILS

S E A L
FOR THE FIRM, BY:
Matthew J Giani
Digitally signed by Matthew J Giani
Date: 2024.06.10 16:34:43 -04'00'
MATTHEW J. GIANI, P.E.
FLA. P.E. No. 84229

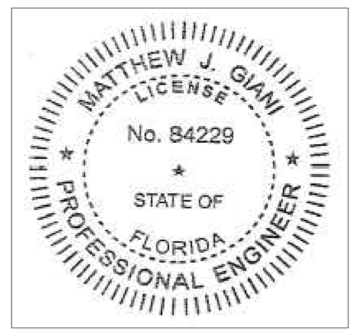

This item has been digitally signed and sealed by Matthew J. Giani on the date on the digital seal.

Printed copies of this document are not considered signed and sealed and the signature must be verified on any electronic copies.

DATE: JUNE 2024
JOB NO. 1136B.01
SHEET CE5

C:\Users\mattg\OneDrive - SDA Engineering\Documents - SDA Engineering\Cad\Eng\1136A.00 Atlantic One - Pompano Mixed Use\1136B.01 Atlantic One\WS Details\1136B WS Details.dwg, 6/10/2024 3:57:32 PM