THIS DOCUMENT, TOGETHER WITH THE CONCEPTS AND DESIGNS PRESENTED HEREIN, AS AN INSTRUMENT OF SERVICE, IS INTENDED ONLY FOR THE SPECIFIC PURPOSE AND CLIENT FOR WHICH IT WAS PREPARED. REUSE OF AND IMPROPER RELIANCE ON THIS DOCUMENT WITHOUT WRITTEN AUTHORIZATION AND ADAPTATION BY BOWMAN CONSULTING SHALL BE WITHOUT LIABILITY TO BOWMAN CONSULTING.

POLE BASE NOTE:
1. FOR REFERENCE ONLY. ALL STRUCTURAL REQUIREMENTS SHALL BE PROVIDED AND FINALIZED BY STRUCTURAL ENGINEER.

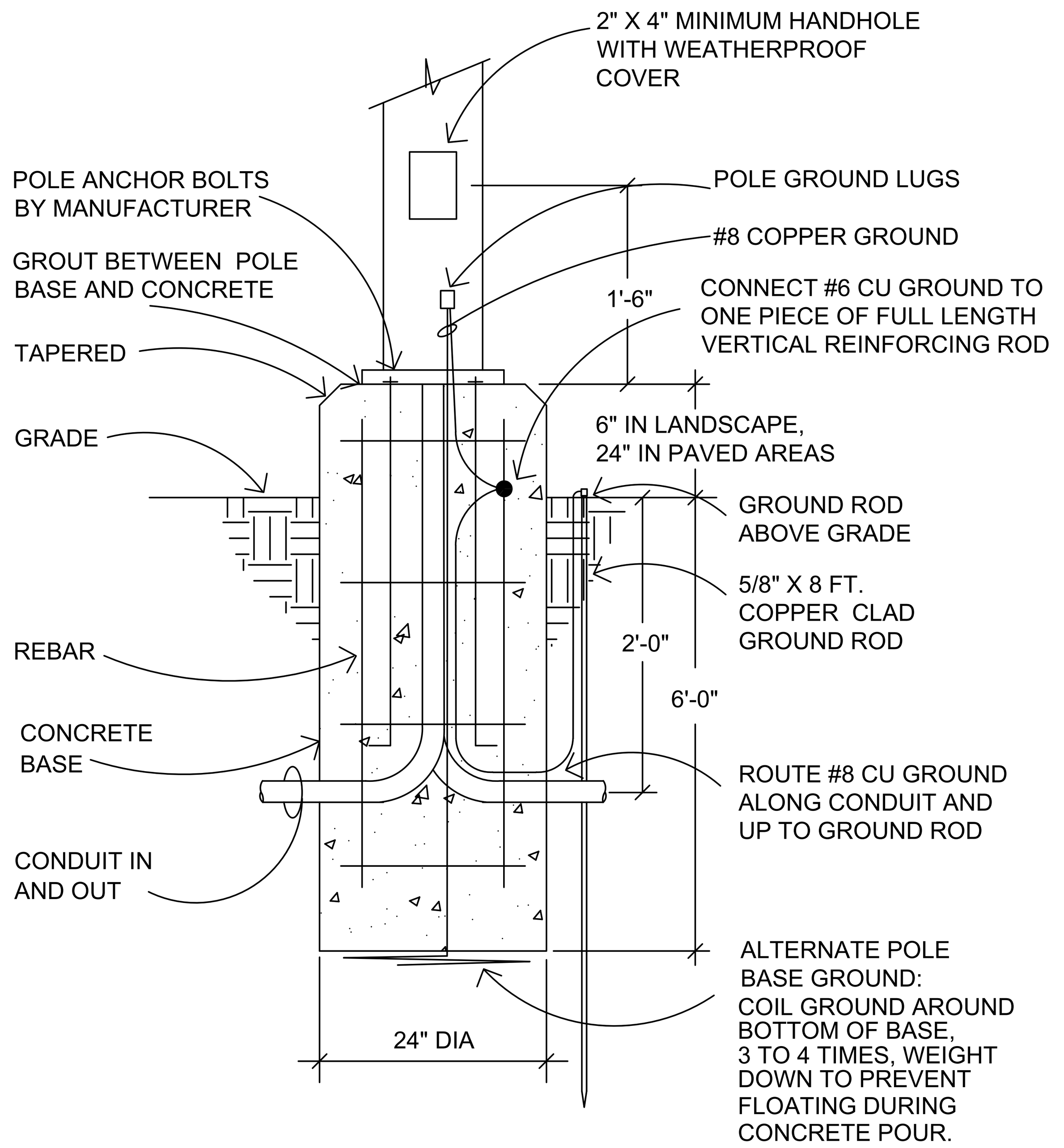

1 POLE BASE DETAIL
SCALE: N.T.S

WPX0 LED
Wall Pack

Catalog Number
Notes
Type B3

Hit the Tab key or mouse over the page to see all interactive elements.

Specifications
Depth (D): 2"
Height (H): 5.75"
Width (W): 5.5"
Weight: 2.5lbs

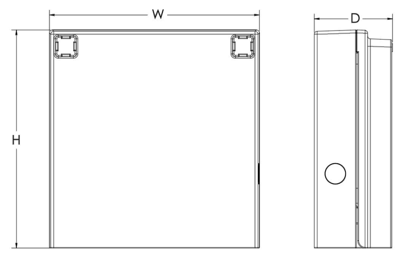

Introduction
The WPX LED wall packs are energy-efficient, cost-effective, and aesthetically appealing solutions for both HID wall pack replacement and new construction opportunities. Available in four sizes, the WPX family delivers 850 to 9,200 lumens with a wide, uniform distribution.

The WPX0 full cut-off wall pack is an excellent above the door lighting solution. Reliable IP66 construction and excellent LED lumen maintenance ensure a long service life. Standard features such as Adjustable Lumen Output (ALO), color switching and switchable photocell make WPX0 ideal for any application.

Ordering Information
EXAMPLE: WPX0 LED ALO SWW2 MVOLT PE DDBXD

Series	Color Temperature	Voltage	Controls	Finish
WPX0 LED ALO 850 - 1,650 Lumens	SWW2 3000K / 4000K / 5000K	MVOLT 120V - 277V	PE Photocell (On/Off)	DDBXD Dark bronze

Note: The lumen output and input power shown in the ordering tree are average representations of all configuration.

NOTES:
Default out of the box settings: 1,650 Lumens, 4000K, Photocell enabled

FEATURES & SPECIFICATIONS
INTENDED USE
The WPX LED wall packs are designed to provide a cost-effective, energy-efficient solution for the one-for-one replacement of existing HID wall packs. The WPX0, WPX1, WPX2 and WPX3 are ideal for replacing up to 70W, 150W, 250W, and 400W HID luminaires respectively. WPX luminaires deliver a uniform, wide distribution. WPX is rated for -40ºC to 40ºC.

CONSTRUCTION
WPX feature a die-cast aluminum main body with optimal thermal management that both enhances LED efficacy and extends component life. The luminaires are IP66 rated, and sealed against moisture or environmental contaminants.

ELECTRICAL
Light engine consist of high-efficacy LEDs and LED lumen maintenance of L86/100,000 hours. Color temperature (CCT) can be switched between 3000K, 4000K and 5000K with minimum CRI of 80. Electronic driver ensures system power factor >90% and THD <20%. The luminaire operates on MVOLT (120V - 277V) input.

A module inside the luminaire allows the installer to not only switch between CCTs, but also the adjust the lumen output and switch on and off the photocell (PE).

INSTALLATION
WPX can be mounted directly over a standard electrical junction box. A port on the back surface allows poke-through conduit wiring on surfaces that don't have an electrical junction box. Wiring can be made in the integral wiring compartment in all cases. WPX is only recommended for installations with LEDs facing downwards.

LISTINGS
CSA Certified to meet U.S. and Canadian standards. Suitable for wet locations. IP66 Rated. DesignLights Consortium® (DLC) qualified product. Not all versions of this product may be DLC qualified. Please check the DLC Qualified Products List at www.designlights.org/QPL to confirm which versions are qualified.

WARRANTY
5-year limited warranty. This is the only warranty provided and no other statements in this specification sheet create any warranty of any kind. All other express and implied warranties are disclaimed. Complete warranty terms located at: www.acuitybrands.com/CustomerResources/Terms_and_conditions.aspx.

Note: Actual performance may differ as a result of end-user environment and application. All values are design or typical values, measured under laboratory conditions at 25°C. Specifications subject to change without notice.

B3

Performance Data

Electrical Load

ALO Setting	Input Power (W)	120 V (A)	208 V (A)	240 V (A)	277 V (A)
ALO 4	13.0	0.11	0.06	0.05	0.05
ALO 3	9.2	0.08	0.04	0.04	0.03
ALO 2	7.8	0.07	0.04	0.03	0.03
ALO 1	6.4	0.05	0.03	0.03	0.02

Projected LED Lumen Maintenance
Data references the extrapolated performance projections in a 25°C ambient, based on 6,000 hours of LED testing (tested per IESNA LM-80-08 and projected per IESNA TM-21-11).
To calculate LLF, use the lumen maintenance factor that corresponds to the desired number of operating hours below. For other lumen maintenance values, contact factory.

Operating Hours	50,000	75,000	100,000
Lumen Maintenance Factor	>0.93	>0.89	>0.86

Lumen Output

ALO Setting	Color Temperature	Lumen Output
ALO 4	3000K	1,591
	4000K	1,644
	5000K	1,667
ALO 3	3000K	1,164
	4000K	1,191
	5000K	1,225
ALO 2	3000K	974
	4000K	994
	5000K	1,025
ALO 1	3000K	814
	4000K	829
	5000K	859

Lumen Ambient Temperature (LAT) Multipliers
Use these factors to determine relative lumen output for average ambient temperatures from 0-50°C (32-122°F).

Ambient	Ambient	Lumen Multiplier
0°C	32°F	1.027
5°C	41°F	1.023
10°C	50°F	1.018
15°C	59°F	1.012
20°C	68°F	1.006
25°C	77°F	1.000
30°C	86°F	0.993
35°C	95°F	0.986
40°C	104°F	0.979

Photometric Diagrams
To see complete photometric reports or download .ies files for this product, visit the Lithonia Lighting WPX LED homepage. Tested in accordance with IESNA LM-79 and LM-80 standards

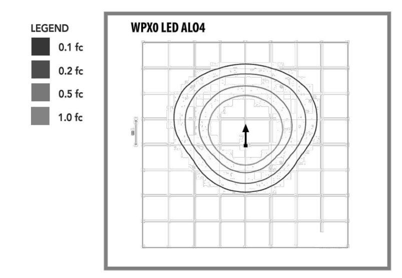

Switchable Features

Catalog # : Project : Type : BCSD
Prepared By : Date :

Scottsdale® Legacy (CRUS)
LED Canopy Luminaire

IP66

OVERVIEW	
Lumen Package (lm)	5,000 - 22,000
Wattage Range (W)	38 - 152
Efficacy Range (LPW)	114 -156
Weight lbs (kg)	23 (10.4)

QUICK LINKS
Ordering Guide | Performance | Photometrics | Dimensions

FEATURES & SPECIFICATIONS

Construction
- Features a ultra-slim 11/16" profile die-cast housing, with flat clear or diffused tempered glass lens. Unit is water-resistant, sealed and IP66 rated. Integral designed heat sink does not trap dirt and grime, ensuring cool running performance over the life of the fixture.
- Standard color is white and is finished with LSI's DuraGrip® polyester powder coat process. DuraGrip withstands extreme weather changes without cracking or peeling.
- Luminaire assembly incorporates a pressure stabilizing vent breather to prevent seal fatigue and failure.

Optical System
- Features an array of select, mid-power, high brightness, high efficiency LED; 3000K, 4000K, 5000K color temperature, 80 CRI (nominal).
- Choice of Symmetric or Asymmetric distribution. Asymmetric provides a wider distribution pattern. Optional symmetric with diffused lens also available.
- Forward Throw distribution provides an industry leading unique distribution pattern that illuminates the area under the gas canopy and beyond. The forward through optic directs the light to the forecourt from the gas canopy eliminating the need for supplemental floodlights and extensive perimeter lighting.
- Diffuse lens available as an option to soften brightness of the luminaire.
- Six Lumen Packages: 5,000, 9,000, 10,000, 13,000, 18,000 and 22,000 Lumens.

Electrical
- High performance factory programmable driver features over-voltage, under voltage, short-circuit and over temperature protection with integral 6kV surge protection that meets IEEE C62.41.2 and ANSI C82.77-5 Location Category C Low standards. Additional field replaceable 10kV surge protection device meets a minimum Category C Low operation (per ANSI/ IEEE C62.41.2). Custom lumen and wattage packages available.
- Driver components are fully encased in potting for moisture resistance. Complies with IEC and FCC standards. 0-10 V dimming supplied standard with all drive currents.
- Die-cast aluminum, wet location rated driver/electrical enclosure is elevated above canopy deck to prevent water entry, provide easy "knock-out" connection of primary wiring and acts as the primary heatsink ensuring cool operation of internal components for longer life. Seals to optical housing via one-piece molded silicone gasket.
- Universal voltage power supply, 120-277 VAC, 50/60 HZ and 347-480 VAC, 50/60 HZ input.
- -40°C to 55°C (-40°F to 131°F) ambient operating temperature. (Varies based on lumen package and mounting style see performance data for specifics.)
- Minimum 60,000 to 100,000 hours depending upon the ambient temperature of the installation location (see performance data for specifics.)

Hazardous Location
- Designed for lighter than air fuel applications. Product is suitable for Class 1 Divisions 2 only when properly installed per LSI installation instructions. See lsicorp.com for specific guidance. Not available on SLW.

Installation
- One-person installation.
- Installs in a 12" or 16" deck pan. Deck penetration consists of a 4" hole, simplifying installation and water sealing. Unit is designed to quickly retrofit into existing Scottsdale (4") hole as well as openings for Encore and Encore Top Access and to reconnect wiring for the SC/ECTA without having to relocate the conduit.
- Retro panels are available for existing Encores as well as kits for recessed and 2x2 installations (see separate spec sheets). Support brackets are provided standard, to prevent sagging of deck.

Warranty
- LSI luminaires carry a 5-year limited warranty. Refer to https://www.lsicorp.com/resources/terms-conditions-warranty/ for more information.

Listings
- UL and ETL listed to UL 1598, UL 8750 and other U.S. and International safety standards. Suitable for wet locations.
- DesignLights Consortium® (DLC) Premium qualified product. Not all versions of this product may be DLC Premium qualified. Please check the DLC Qualified Products List at www.designlights.org/QPL to confirm which versions are qualified.
- Meets Buy American Act requirements.
- IDA compliant with 3000K or lower color temperature.

Scottsdale® Legacy (CRUS) LED Canopy Luminaire
Type : BCSD
Have questions? Call us at (800) 436-7800

ORDERING GUIDE
Back to Quick Links

TYPICAL ORDER EXAMPLE: CRUS SCFT LED VHO 50 UE WHT DFL

Prefix	Distribution	Light Source	Driver	Color Temperature	Input Voltage	Finish	Options[4]
CRUS - LED Canopy Luminaire	SC - Symmetric AC[1] - Asymmetric SCFT[2] - Combination Standard Symmetric and Forward Throw	LED	SLW - 5,000 Lumens VLW - 9,000 Lumens LW - 11,000 Lumens SS - 13,000 Lumens HO - 19,000 Lumens VHO - 22,000 Lumens[2] Custom Lumen Packages[3] VHO - 22,000 Lumens	30 - 3000K 40 - 4000K 50 - 5000K	UE - Universal Voltage (120 - 277V) HV - High Voltage (347 - 480V)	WHT - White BRZ - Bronze BLK - Black	HL[5] - Hazardous Location DFL - Diffuse Lens

Need more information? Click here for our glossary
Have additional questions? Call us at (800) 436-7800

ACCESSORY ORDERING INFORMATION (Accessories are field installed)

Order Number	Description
525946	Retrofit Panels - EC / ECTA / SCF to CRUS, for 16" Deck Panel
530281	Retrofit Panels - ECTA / SCF to CRUS, for 12" Deck Panel
357282	Retrofit 2x2 Cover Panel Blank (no holes)
354702	Retrofit RIC Cover Panel Blank (no holes)
1320540	Kit - Hole Plugs and Silicone (enough for 25 retrofits)*

*Consists of (25) 7/8" hole plugs, (100) 5/16" hole plugs and (1) tube of RTV

1 AC distribution utilizes a reflector which alters the look from a standard SC distribution.
2 FT distribution option only available with VHO 22,000 lumen package.
3 Custom lumen and wattage packages available consult factory Values are within industry standard tolerances but not DLC listed.
4 Not available with SCFT.
5 Not available on SLW.

Scottsdale® Legacy (CRUS) LED Canopy Luminaire
Type : BCSD
Have questions? Call us at (800) 436-7800

PERFORMANCE
Back to Quick Links

Delivered Lumens

Lumen Package	Distribution	3000K CCT Delivered Lumens	3000K Efficacy	3000K BUG Rating	4000K CCT Delivered Lumens	4000K Efficacy	4000K BUG Rating	5000K CCT Delivered Lumens	5000K Efficacy	5000K BUG Rating	Wattage
VHO	SC	21,301	140	B4-U0-G2	21,835	144	B4-U0-G2	22,697	150	B4-U0-G2	152
	AC	17,355	114	B3-U0-G3	17,799	117	B3-U0-G3	18,502	122	B3-U0-G3	
	SCFT	22,192	146	B3-U0-G3	22,598	149	B3-U0-G3	23,269	153	B3-U0-G3	
HO	SC	17,889	143	B3-U0-G1	18,346	146	B3-U0-G2	19,071	152	B4-U0-G2	125
	AC	14,582	116	B3-U0-G2	14,955	119	B3-U0-G2	15,546	124	B3-U0-G2	
SS	SC	13,113	141	B3-U0-G1	13,449	144	B3-U0-G1	13,980	150	B3-U0-G1	93
	AC	11,468	123	B3-U0-G2	11,761	126	B3-U0-G2	12,226	131	B3-U0-G2	
LW	SC	10,457	144	B3-U0-G1	10,724	148	B3-U0-G1	11,148	154	B3-U0-G1	73
	AC	9,145	126	B2-U0-G2	9,379	129	B2-U0-G2	9,749	134	B2-U0-G2	
VLW	SC	8,783	146	B3-U0-G1	9,008	149	B3-U0-G1	9,364	155	B3-U0-G1	60
	AC	7,681	127	B2-U0-G1	7,878	131	B2-U0-G1	8,189	136	B2-U0-G1	
SLW	SC	5,585	146	B2-U0-G1	5,728	150	B2-U0-G1	5,954	156	B2-U0-G1	38
	AC	4,884	128	B1-U0-G1	5,009	131	B1-U0-G1	5,207	136	B1-U0-G1	

*LEDs are frequently updated therefore values are nominal.

Electrical Data (AMPS)

Lumen Package	Wattage	120V	208V	240V	277V	347V	480V
VHO	152	1.27	0.73	0.64	0.55	0.44	0.32
HO	124	1.03	0.6	0.52	0.45	0.36	0.26
SS	92	0.77	0.44	0.38	0.33	0.27	0.19
LW	72	0.6	0.35	0.3	0.26	0.21	0.15
VLW	60	0.5	0.29	0.25	0.22	0.17	0.13
SLW	38	0.32	0.18	0.16	0.14	0.11	0.08

*Electrical data at 25C (77F). Actual wattage may differ by +/-10%.

OPERATING TEMPERATURE

Lumen Package	Mounting	Max
VHO	Metal/Wood Canopy	45 C
HO	Metal/Wood Canopy	45 C
SS	Metal/Wood Canopy	55 C

Recommended Lumen Maintenance[1] CRUS VHO

Ambient Temperature °C	Initial[2]	25k hr[2]	50k hr[2]	75k hr[3]	100k hr[3]
0 C	102%	97%	92%	88%	84%
10 C	102%	97%	92%	88%	84%
20 C	102%	97%	92%	88%	84%
25 C	102%	97%	92%	88%	84%
30 C	102%	97%	92%	88%	84%
40 C	101%	95%	90%	85%	80%
50 C	101%	94%	89%	83%	78%

Recommended Lumen Maintenance[1] CRUS SS

Ambient Temperature °C	Initial[2]	25k hr[2]	50k hr[2]	75k hr[3]	100k hr[3]
0	102%	97%	92%	88%	84%
10	102%	97%	92%	88%	84%
20	102%	97%	92%	88%	84%
25	102%	97%	92%	88%	84%
30	102%	97%	92%	88%	84%
40	102%	97%	92%	88%	84%
50	101%	95%	91%	86%	82%

1 Lumen maintenance values at 25 ˚C are calculated per TM-21 based on LM-80 data and in-situ luminaire testing.
2 In accordance with IESNA TM-21-11, Projected Values represent interpolated value based on time durations that are within six times (6X) the IESNA LM-80-08 total test duration (in hours) for the device under testing (DUT) i.e. the packaged LED).
3 In accordance with IESNA TM-21-11, Calculated Values represent time durations that exceed six times NA LM-80-08 total test duration (in hours) for the device under testing (DUT) i.e. the packaged LED).

Scottsdale® Legacy (CRUS) LED Canopy Luminaire
Type : BCSD
Have questions? Call us at (800) 436-7800

PHOTOMETRICS
Back to Quick Links

Luminaire photometry has been conducted by a NVLAP accredited testing laboratory in accordance with IESNA LM-79-08. As specified by IESNA LM-79-08 the entire luminaire is tested as the source resulting in a luminaire efficiency of 100%.

See the individual product page on https://www.lsicorp.com/ for detailed photometric data.

CRUS-SC-SS-50

Luminaire Data	
Type 5 Distribution	
Description	5000 Kelvin, 80 CRI
Delivered Lumens	13,980
Watts	93
Efficacy	150
IES Type	Type VS - Very Short
BUG Rating	B3-U0-G1

Zonal Lumen Summary		
Zone	Lumens	% Luminaire
Low (0-30°)	3,479.6	26.7%
Medium (30-60°)	7,109.8	54.5%
High (60-80°)	2,334.8	17.9%
Very High (80-90°)	114.4	0.9%
Uplight (90-180°)	0.0	0.0%
Total Flux	13,038.6	100%

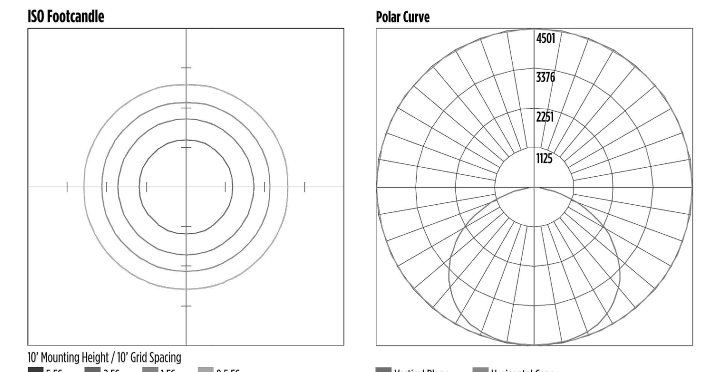

CRUS-AC-SS-50

Luminaire Data	
Type 3 Distribution	
Description	5000 Kelvin, 80 CRI
Delivered Lumens	12,226
Watts	93
Efficacy	131
IES Type	Type III, Very Short
BUG Rating	B3-U0-G2

Zonal Lumen Summary		
Zone	Lumens	% Luminaire
Low (0-30°)	3,240.3	27%
Medium (30-60°)	6,245.5	51%
High (60-80°)	2,594.6	21%
Very High (80-90°)	146.1	1%
Uplight (90-180°)	0	0%
Total Flux	12,227	100%

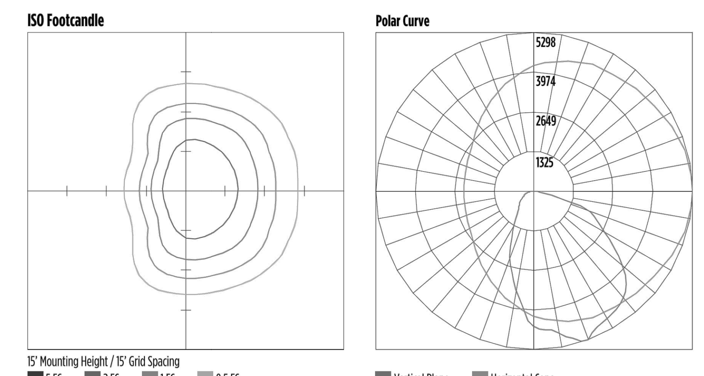

Scottsdale® Legacy (CRUS) LED Canopy Luminaire
Type : BCSD
Have questions? Call us at (800) 436-7800

PHOTOMETRICS
Back to Quick Links

CRUS-SCFT-SS-50

Luminaire Data	
Type 5 Distribution	
Description	5000 Kelvin, 80 CRI
Delivered Lumens	13,980
Watts	93
Efficacy	150
IES Type	Type VS - Very Short
BUG Rating	B3-U0-G3

Zonal Lumen Summary		
Zone	Lumens	% Luminaire
Low (0-30°)	2,397.7	10.30%
Medium (30-60°)	8,658.8	37.20%
High (60-80°)	4,914.2	21.10%
Very High (80-90°)	225.7	1.00%
Uplight (90-180°)	0	0%
Total Flux	23,269.3	100%

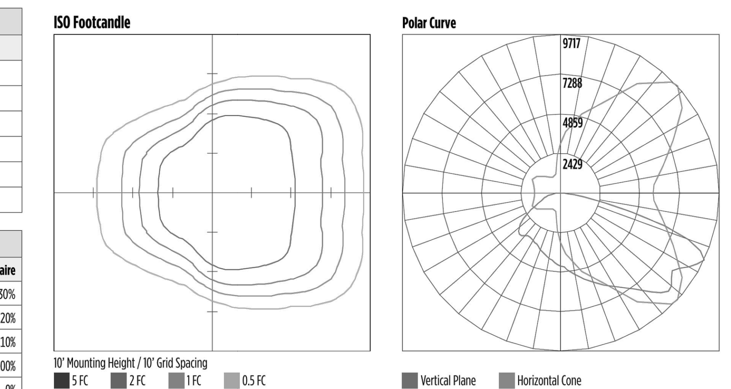

PRODUCT DIMENSIONS
Back to Quick Links

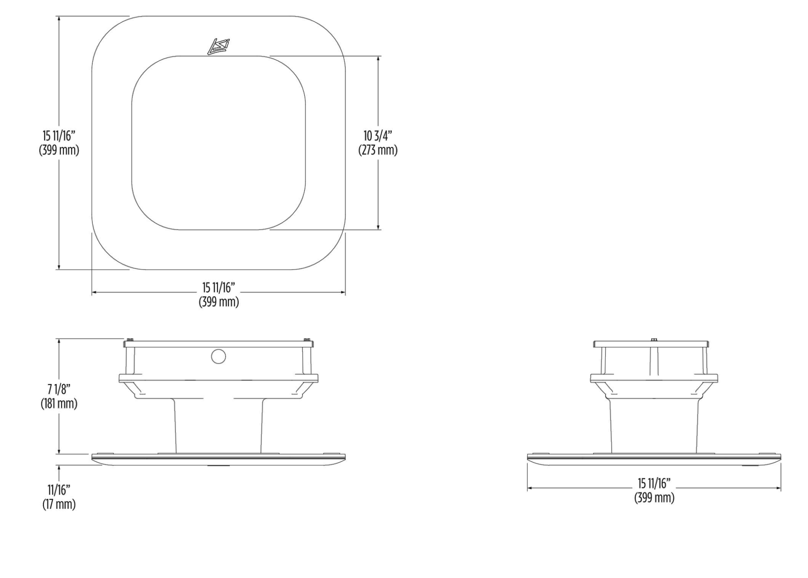

Chick-fil-A
5200 Buffington Road
Atlanta, Georgia 30349-2998

Bowman
Certificate of Authorization License No. 30462
910 SE 17th St, Suite 300
Fort Lauderdale, FL 33316
Phone: (954) 314-8481
www.bowman.com
© 2021 Bowman Consulting Group Ltd

Seal

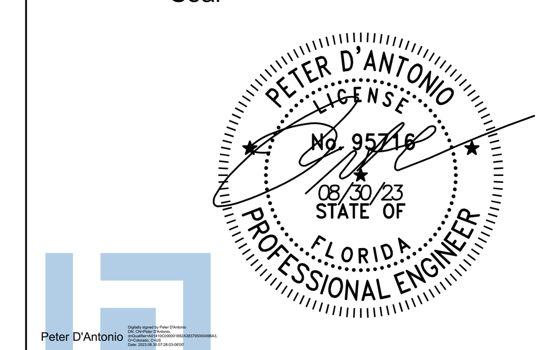

PETER D'ANTONIO, P.E.
FLORIDA REG. NO. 95716

CHICK-FIL-A
ATLANTIC & POWERLINE
2100 W ATLANTIC BLVD
POMPANO BEACH, FL 33069

FSR#05557

BUILDING TYPE / SIZE: P14 LS BN

REVISION SCHEDULE

NO.	DATE	DESCRIPTION

CONSULTANT PROJECT #	010014-01-208
PRINTED FOR	PERMIT
DATE	8/30/2023
DRAWN BY	C.W.
REVIEWED BY	A.P.

Information contained on this drawing and in all digital files produced for above named project may not be reproduced in ... press written or ... from ... horized project r... entatives.

SHEET
PHOTOMETRIC CUTSHEETS
SHEET NUMBER
E-103

PERMIT

DRC
PZ23-12000037
10/04/2023