COPYRIGHT 2021 GALLO HERBERT ARCHITECTS

IT IS A VIOLATION OF THE LAW FOR ANY PERSON, UNLESS ACTING UNDER THE DIRECTION OF A LICENSED ARCHITECT TO ALTER THESE PLANS AND SPECIFICATIONS. THIS DOCUMENT CONTAINS PROPERTY INFORMATION AND SHALL NOT BE USED OR REPRODUCED, OR ITS CONTENTS DISCLOSED, IN WHOLE OR IN PART, WITHOUT THE PRIOR WRITTEN CONSENT OF GALLO HERBERT ARCHITECTS
CONTRACTOR(S) SHALL VERIFY EXISTING CONDITIONS AND CORRELATE DIMENSIONS PRIOR TO PROVIDING THE WORK DETAILED IN THESE DRAWINGS, AND SHALL PROMPTLY NOTIFY THE DESIGNER OF ANY DISCREPANCIES.

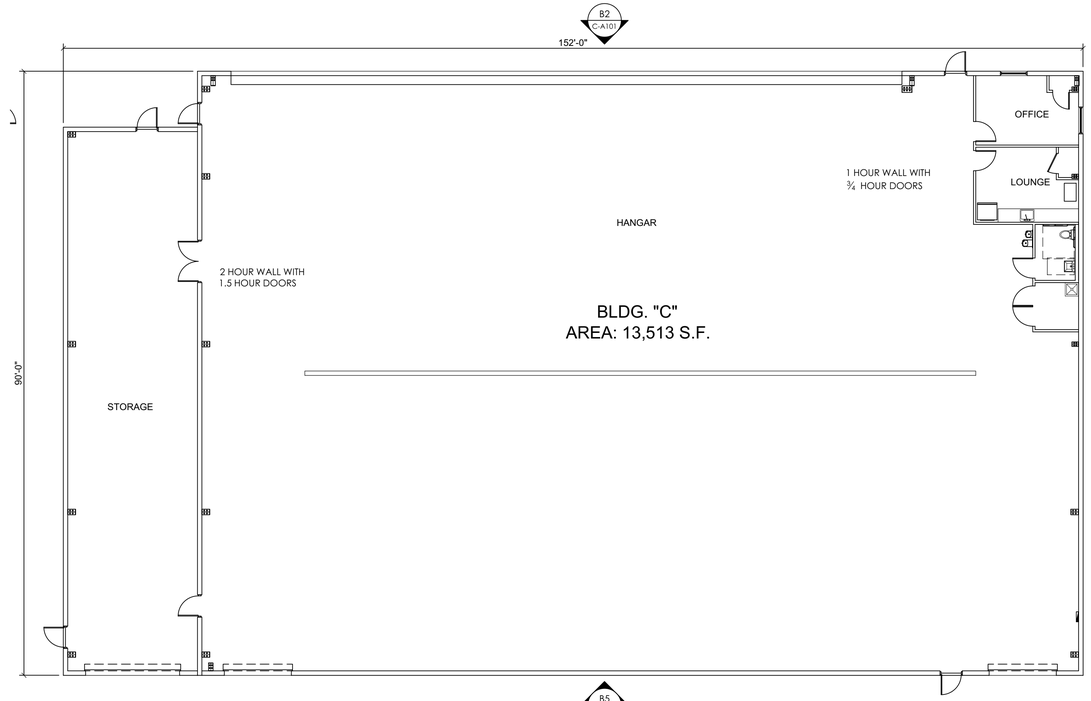

C5 BUILDING C FLOOR PLAN
3/32" = 1'-0"

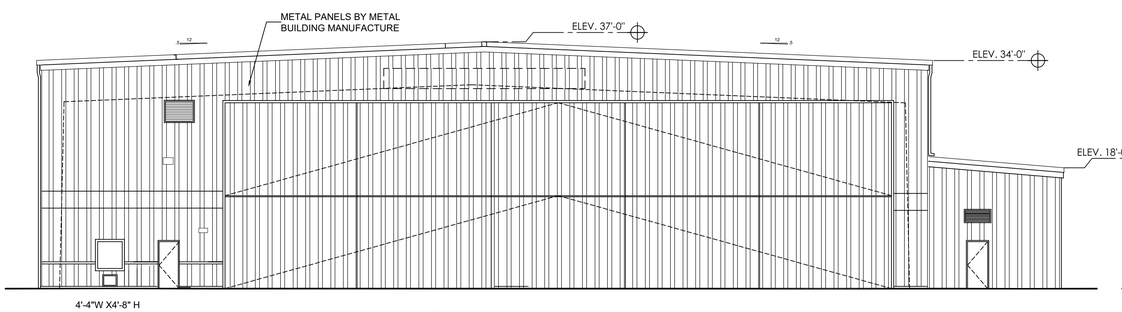

B2 BUILDING C NORTH ELEVATION
3/32" = 1'-0"

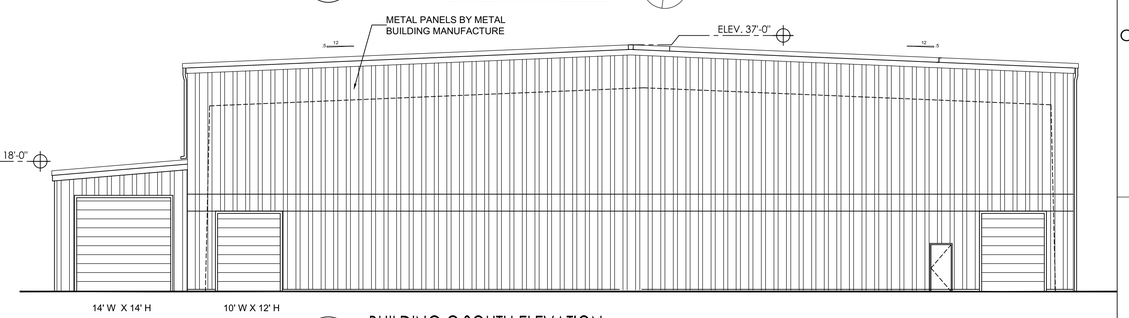

B5 BUILDING C SOUTH ELEVATION
3/32" = 1'-0"

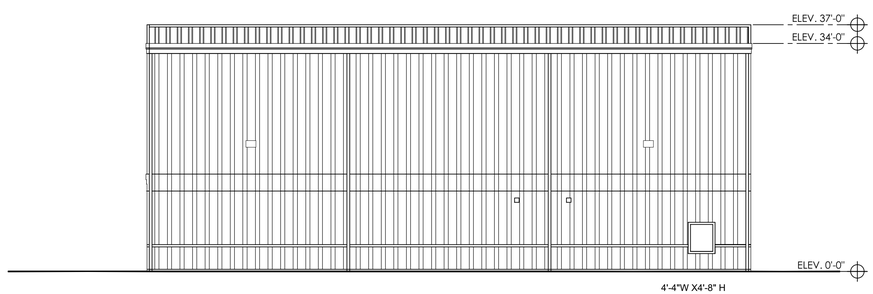

A2 BUILDING C EAST ELEVATION
3/32" = 1'-0"

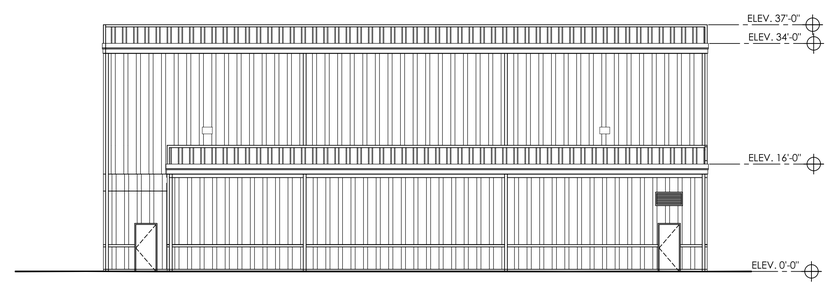

A5 BUILDING C WEST ELEVATION
3/32" = 1'-0"

GALLO HERBERT ARCHITECTS
1311 W NEWPORT CENTER DRIVE DEERFIELD BEACH, FLORIDA 33442 PH. 954.794.0300 FX. 954.794.0301
AA226001731

SEAL
☐ WILLIAM J. GALLO FL AR0008440

Brian Herbert
Digitally signed by Brian Herbert
Date: 2022.06.29 16:30:29 -04'00'

☐ BRIAN P. HERBERT FL AR0015474

PROJECT
POMPANO BEACH AIR PARK PARCEL Y

601 NE 10TH ST.
POMPANO BEACH
FL 33060

OWNER
POMPANO BEACH

COMPANY NAME

REVISIONS

No.	Description	Date
	D.R.C. SUBMITTAL	2022-06-28

PROJECT STATUS
D.R.C.

DATE
2021-03-24

PROJECT NUMBER
83-2020

SCALE
AS SHOWN

DRAWN BY JET
CHECKED BY JET

DRAWING TITLE
BLDG. "C"
FLOOR PLAN &
ELEVATIONS

DRAWING NUMBER
C-A101

DRC
PZ22-12000020
10/19/2022

DRC
PZ22-12000020
9/21/2022

DRC
PZ22-12000020
8/3/2022