DRC
PZ23-12000054
08/06/2025

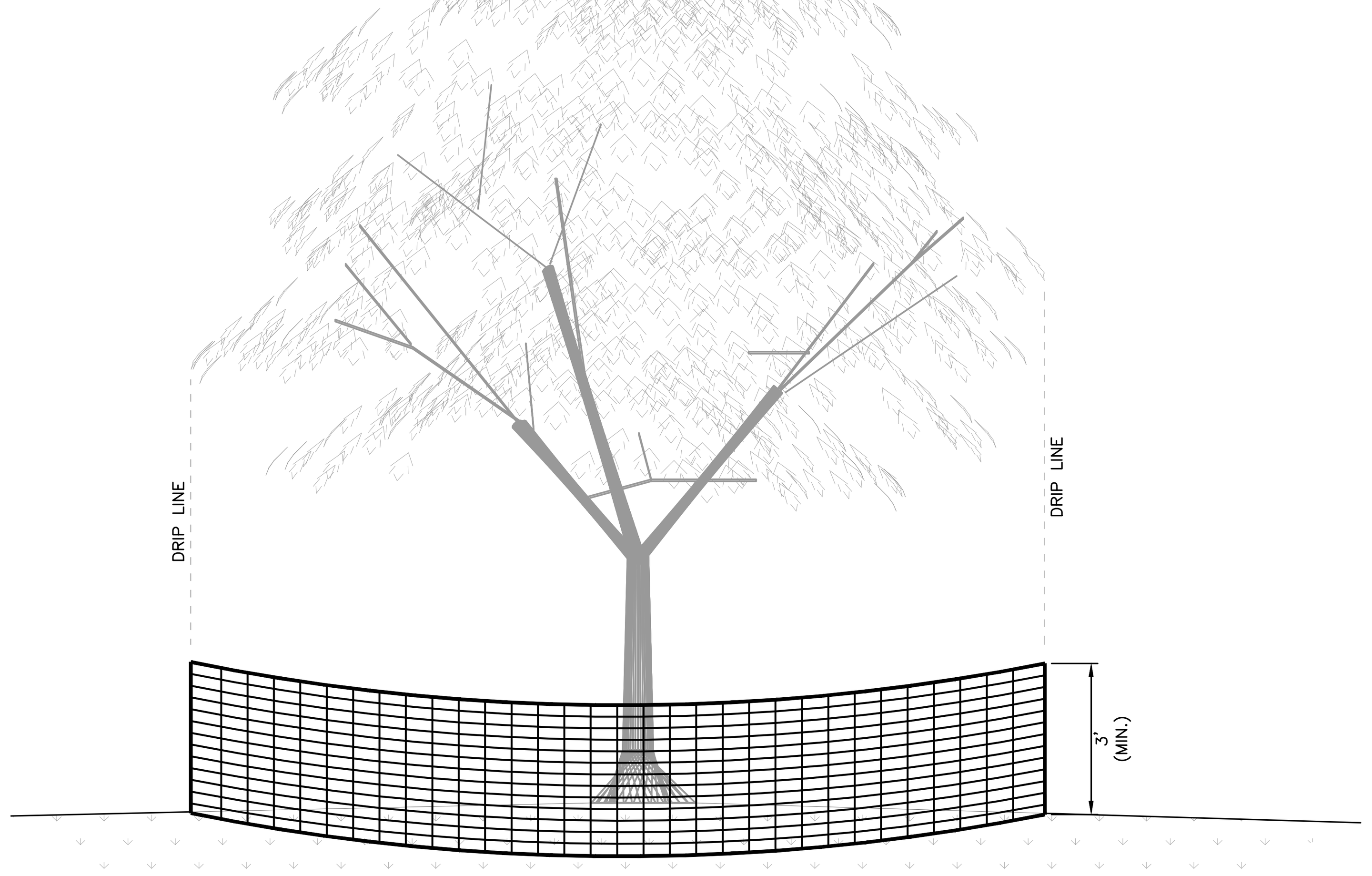

TREE–PROTECTION NOTES:

1. FENCE SHALL BE PLASTIC HIGH–VISIBILITY ORANGE SAFETY FENCING.

2. PERIMETER OF FENCE SHALL BE INSTALLED ALONG THE DRIP LINE OF THE TREE(S) TO BE PROTECTED.

3. IN THE EVENT THAT ANY PORTION OF THE TREE–PROTECTION FENCE IS DAMAGED OR KNOCKED DOWN, THE CONTRACTOR SHALL RE–ESTABLISH THE FENCE IN THE LOCATION SHOWN ON THE PLANS

4. THE CONTRACTOR IS RESPONSIBLE FOR ANY PROTECTED TREES WHICH ARE DAMAGED DURING CONSTRUCTION.

TREE-PROTECTION FENCE

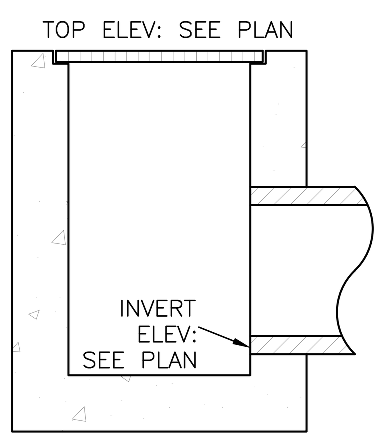

SECTION A-A'

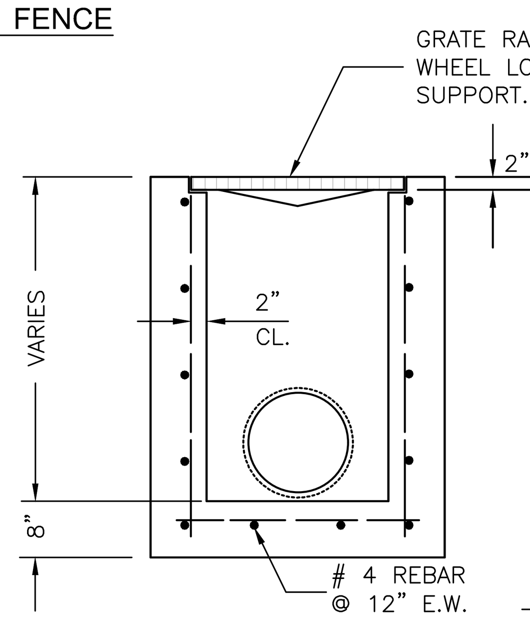

SECTION B-B'

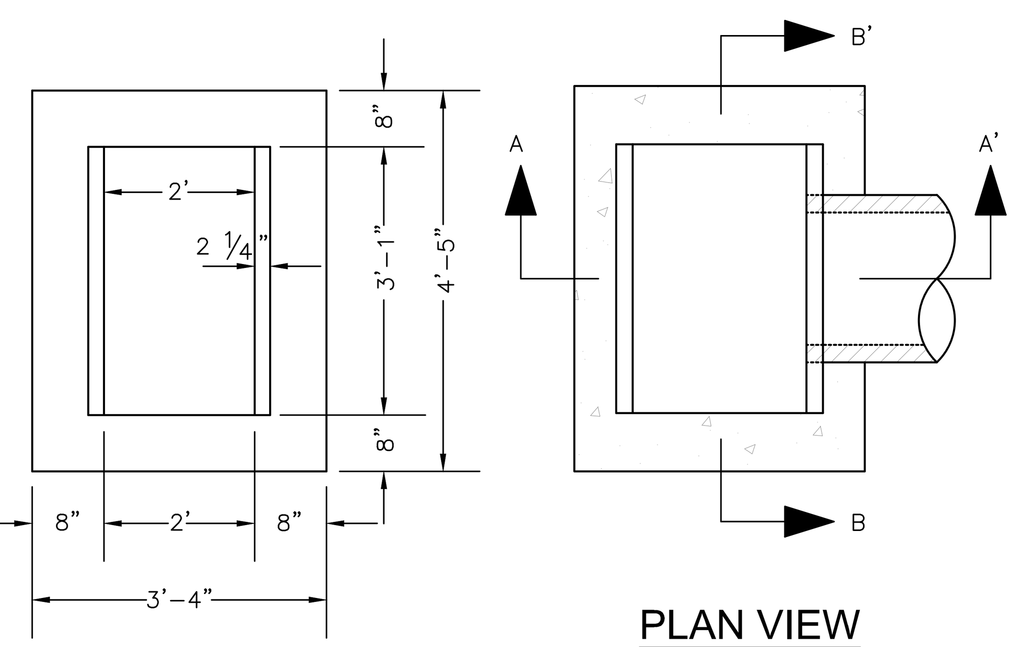

PLAN VIEW

TYPE "C" INLET PER 2015 FDOT INDEX NO. 232 WITH INVERTED CROWN GRATE

NTS

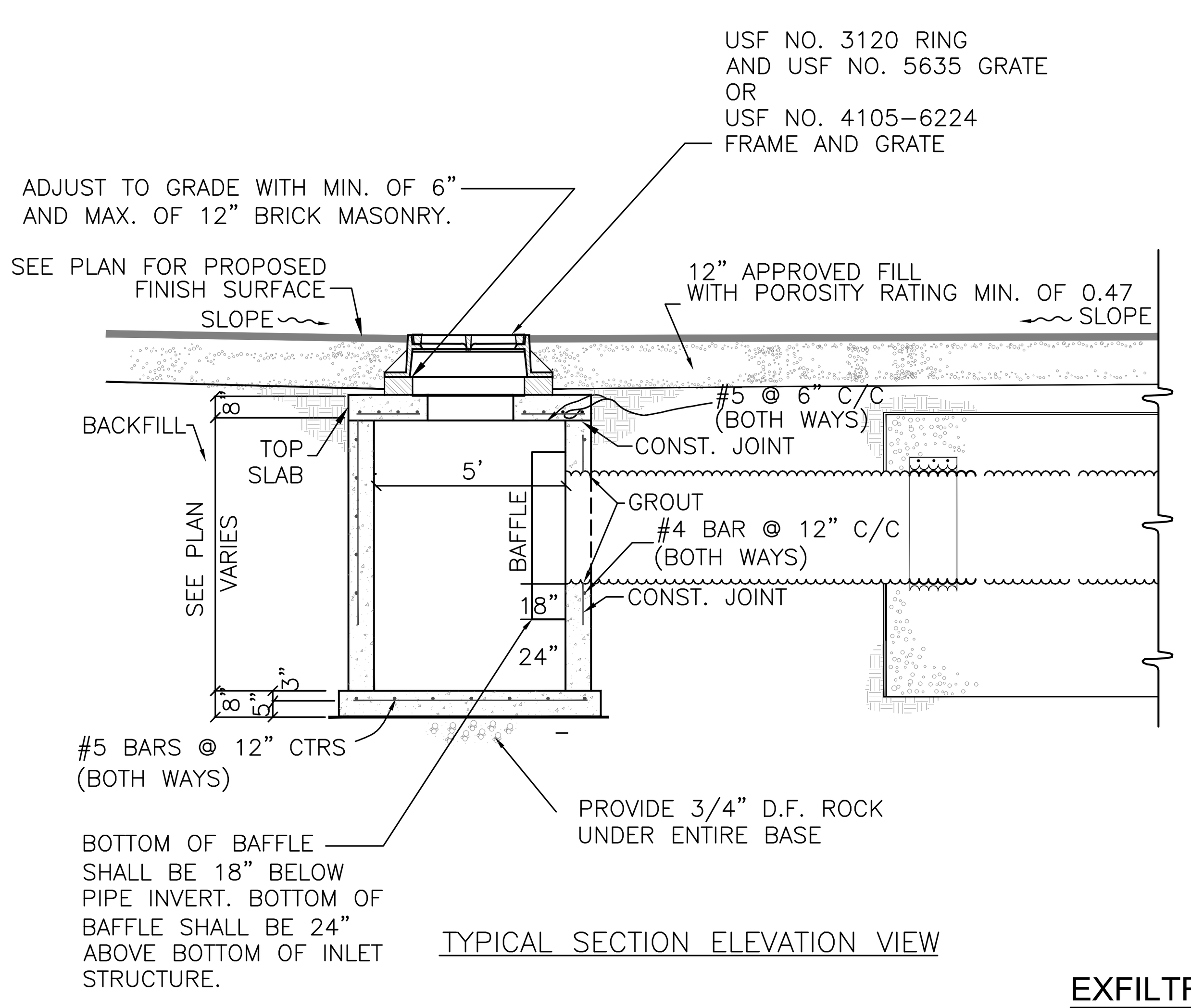

TYPICAL SECTION ELEVATION VIEW

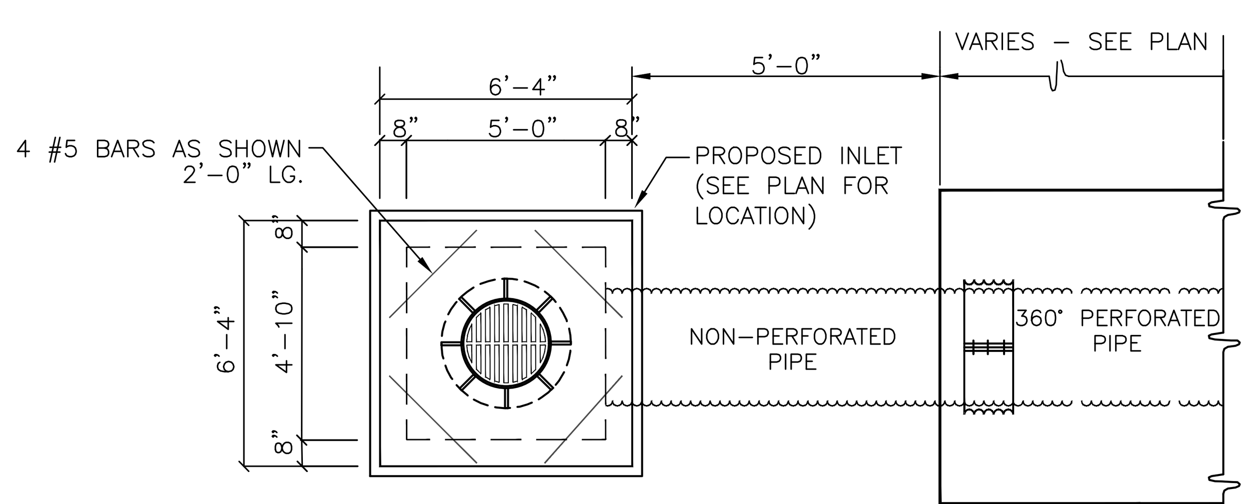

TYPICAL PLAN VIEW

EXFILTRATION TRENCH DETAIL

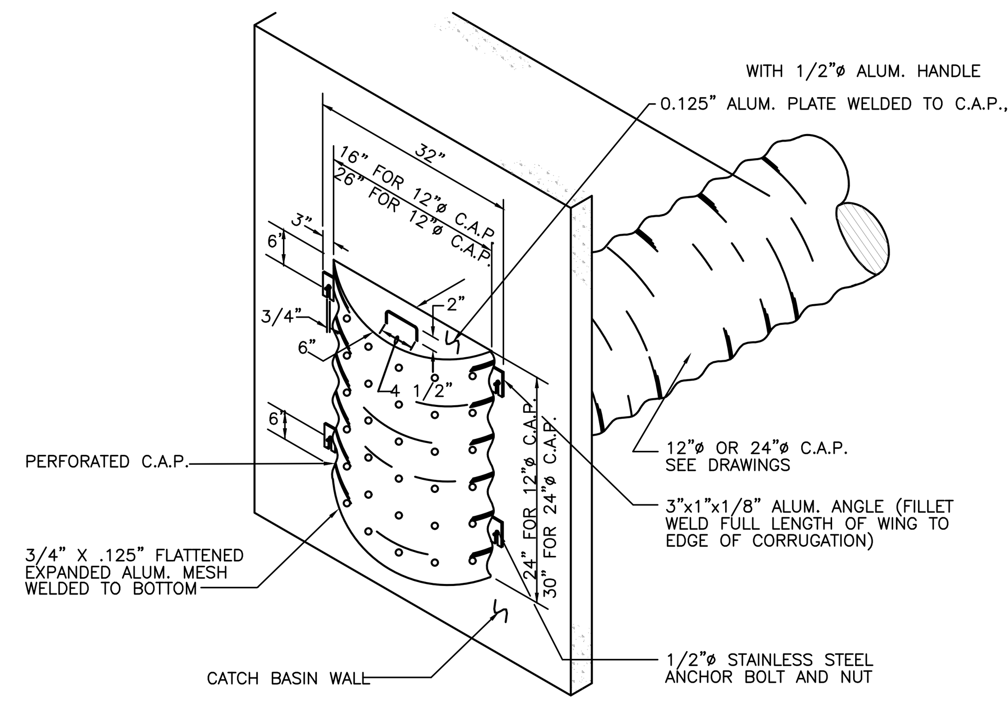

NOTE:

1.–CONTRACTOR TO VERIFY THAT BAFFLE WILL FIT STRUCTURE I.D.
2.–DEBRIS BAFFLE REQUIRED AT CATCH BASINS WHERE CONNECTED DIRECTLY TO PROPOSED DRAIN FIELD.
3.–BOTTOM OF BAFFLE SHALL BE 18" BELOW PIPE INVERT.
4.–BOTTOM OF BAFFLE SHALL BE 24" ABOVE BOTTOM OF INLET STRUCTURE.

DEBRIS BAFFLE

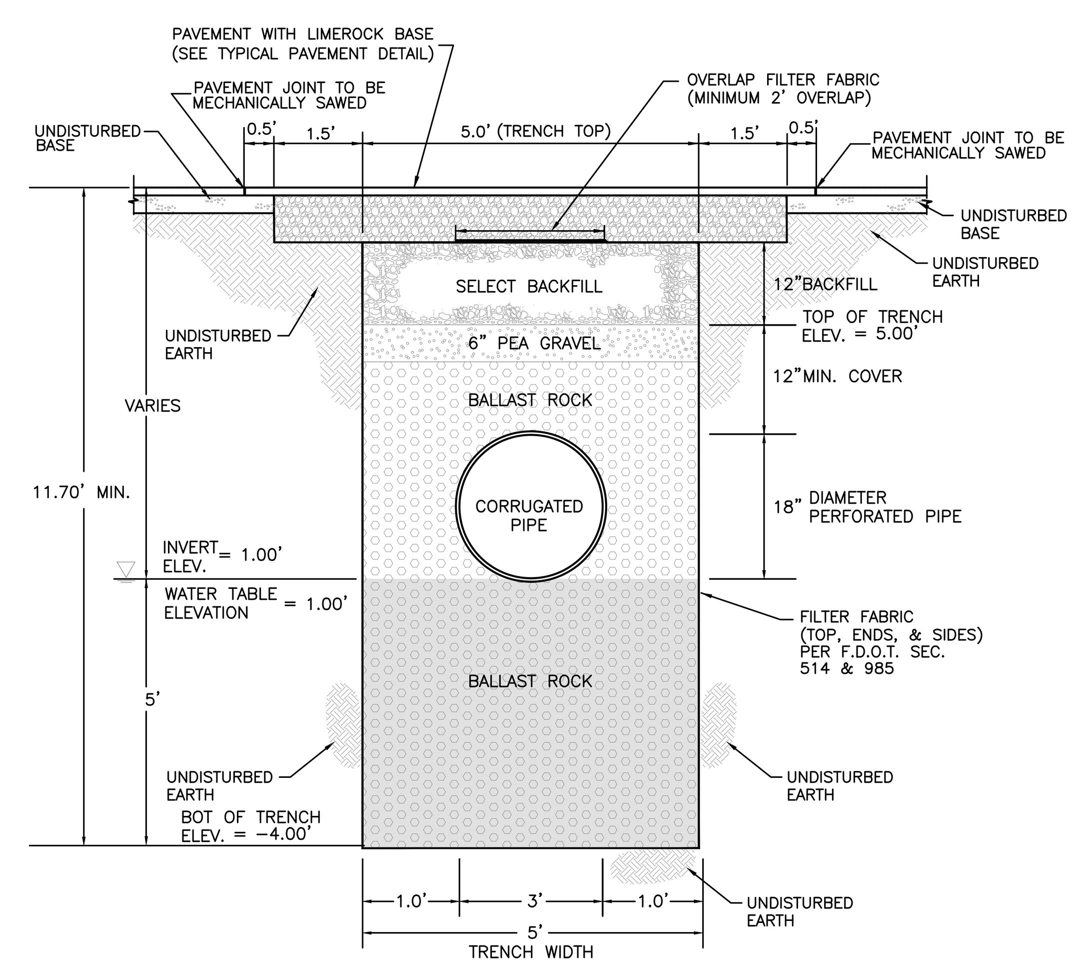

PERFORATED PIPE INSTALLATION FOR EXFIL. TRENCH

REFER TO SFWMD BASIS OF DESIGN MANUAL

CONTRACTOR NOTES

1. MONITOR QUALITY CONTROL OF SUPPLIERS, MANUFACTURERS, PRODUCTS, SERVICES, SITE CONDITIONS, AND WORKMANSHIP, IN ORDER TO PRODUCE THE SPECIFIED QUALITY OF WORK.

2. COMPLY FULLY WITH MANUFACTURERS' INSTALLATION INSTRUCTIONS, INCLUDING EVERY STEP OF EACH SEQUENCE.

3. IF MANUFACTURERS' INSTRUCTIONS CONFLICT WITH CONTRACT DOCUMENTS, REQUEST CLARIFICATION FROM OWNER BEFORE PROCEEDING.

4. COMPLY WITH SPECIFIED STANDARDS AS MINIMUM REQUIREMENTS FOR THE WORK EXCEPT WHEN MORE STRINGENT TOLERANCES, CODES, OR SPECIFIED REQUIREMENTS INDICATE HIGHER STANDARDS OR MORE PRECISE WORKMANSHIP.

5. ENSURE WORK IS PERFORMED BY PERSONS WHO ARE QUALIFIED TO PRODUCE THE SPECIFIED LEVEL OF WORKMANSHIP.

6. MAINTAIN AND OPERATE TEMPORARY FACILITIES IN ORDER TO ASSURE CONTINUOUS SERVICE.

7. MODIFY AND EXTEND SYSTEMS AS REQUIRED BY WORK PROGRESS.

8. COMPLETELY REMOVE TEMPORARY MATERIALS AND / OR EQUIPMENT WHEN THEY ARE NO LONGER REQUIRED.

9. RESTORE EXISTING FACILITIES TO THEIR SPECIFIED CONDITION OR TO THEIR ORIGINAL CONDITION IF NO OTHER CONDITION IS SPECIFIED.

CONSTRUCTION NOTES

1. CLEARING SHALL ONLY BE ALLOWED WITHIN THE AREAS DESIGNATED FOR WORK.

2. WHERE SHOWN TO BE REMOVED, TREES SHALL HAVE THEIR STUMPS AND ROOTS ALSO REMOVED TO A DEPTH OF 3–FEET, MINIMUM, OR AS SPECIFIED ON THE PLANS.

3. TOPSOIL SHALL BE STRIPPED WITHIN THE LIMITS OF THE PROPOSED WORK AREA. THIS TOPSOIL SHALL BE CLASSIFIED AS THE SOIL WHICH IS FERTILE AND EXHIBITING CHARACTERISTICS OF LOCAL TOPSOILS.

4. WHEN DIRECTED SO BY THE OWNER (OR WHERE SHOWN ON THE PLANS) STRIPPED TOPSOIL SHALL BE STOCKPILED AND PROTECTED. STOCKPILED TOPSOIL SHALL HAVE FOREIGN MATERIALS REMOVED, TO INCLUDE: WEEDS, ROOTS, STONES, AND OBJECTS OVER 0.5 CUBIC FEET IN VOLUME.

5. PRIOR TO REUSING TOPSOIL, IT SHALL BE TESTED FOR CHEMICALS, PESTICIDES, AND FERTILIZERS IN ORDER TO VERIFY SOIL TILTH.

6. WHEN TRENCHING THROUGH ASPHALT OR CONCRETE IS REQUIRED, A SAWCUT OR DEEP SCORE SHALL BE UTILIZED TO ENSURE A NEAT STRAIGHT SECTION FOR TRENCHING ACTIVITY.

7. BANKS OF EXCAVATION SHALL BE SHORED, SHEETED, BRACED, OR SLOPED (TO ANGLE OF REPOSE) IN ORDER TO PROTECT WORKERS, ADJACENT STRUCTURES, AND UTILITIES.

8. THE CONTRACTOR SHALL BE RESPONSIBLE FOR ANY DAMAGE CAUSED BY IMPROPER (OR LACK OF) SHORING, SHEETING, OR BRACING.

9. ALL EXCAVATED AREAS SHALL BE PROTECTED FROM WATER BY USE OF PUMPING OR OTHER MATERIALS, MEANS, OR METHODS FOR MAINTAINING A DRY, FIRM WORK AREA.

10. NO BLASTING SHALL BE ALLOWED AS PART OF THIS PROJECT.

11. WHEN EXCAVATING FOR BUILDING, ROADWAY, OR UTILITY SUBGRADE, LOOSE OR SOFT MATERIAL SHALL BE REMOVED TO A SOLID BOTTOM AT (OR BELOW) THE ELEVATION SPECIFIED FOR SUBGRADE ON THE PLANS. EXCESSIVE CUT AREAS SHALL BE FILLED BACK UP TO SUBGRADE ELEVATION USING SUITABLE STRUCTURAL FILL MATERIAL AS APPROVED BY THE ENGINEER.

12. A SMOOTH TRANSITION SHALL BE PROVIDED BETWEEN EXISTING ADJACENT ELEVATIONS AND PROPOSED GRADES.

13. CONTRACTOR SHALL ENSURE THAT ALL GRADES ARE SLOPED TO DRAIN AWAY FROM BUILDINGS AND TO PREVENT PONDING OF WATER (EXCEPT FOR DESIGNATED RETENTION, DETENTION, AND TREATMENT AREAS).

14. BACKFILLING SHALL NOT OCCUR UNTIL ALL DEBRIS AND UNSUITABLE MATERIALS HAVE BEEN REMOVED FROM EXCAVATED AREA.

15. MATERIAL FOR BACKFILL SHALL BE PLACED IN LAYERS NO THICKER THAN 8–INCHES WHERE COMPACTION SHALL BE ACHEIVED BY HEAVY EQUIPMENT, AND NO LARGER THAN 4–INCHES WHERE COMPACTION SHALL BE ACHEIVED BY HAND OR FOOT–OPERATED TAMPERS.

16. IN OPEN SPACE / LANDSCAPED AREAS, GRADES SHALL BE ESTABLISHED TO WITHIN 1–INCH OF THE ELEVATION SPECIFIED IN THE PLANS; AND IN PAVED AREAS, ELEVATIONS SHALL BE ESTABLISHED TO WITHIN 0.25–INCHES OF THE ELEVATION SPECIFIED ON THE PLANS.

17. UPON COMPLETION OF SITE GRADING AND EXCAVATION, ALL EQUIPMENT, DEBRIS, AND MATERIALS WHICH ARE NO LONGER NECESSARY SHALL BE REMOVED; AND UNPAVED AREAS SHALL BE PERMANENTLY STABILIZED AS SHOWN ON THE PLANS.

PROJECT CLOSEOUT NOTES

1. PRIOR TO PROJECT COMPLETION, THE CONTRACTOR SHALL ENSURE THAT THE FOLLOWING ITEMS HAVE BEEN COMPLETED (WHEN REQUIRED AS PART OF THIS PROJECT):

- INSTALLATION, REMOVAL, AND / OR REPAIR OF ALL BID ITEMS
- CUTTING, PLUGGING, AND ABANDONING OF WATER, WASTEWATER, AND STORM SEWER LINES
- CONSTRUCTION OF (AND REPAIRS TO) PAVEMENT, DRIVEWAYS, SIDEWALKS, CURBS, AND GUTTERS
- SODDING, SEEDING, AND MULCHING (UNLESS SPECIFICALLY WAVED BY THE OWNER)
- PAVEMENT MARKINGS
- TRANSFER OF SERVICES
- SUCCESSFUL TESTING OF NEW SYSTEM(S)
- PROJECT SITE CLEAN–UP

2. THE CONTRACTOR SHALL COMPLETE ALL ITEMS ON THE OWNER–PROVIDED CHECKLIST AS A RESULT OF FINAL INSPECTION(S).

3. PRIOR TO COMPLETION OF THE PROJECT, THE OWNER MAY ACCEPT (AND OCCUPY) CERTAIN COMPLETED AREAS OF THE PROJECT UPON APPROVAL.

4. ALL OPERATION AND MAINTENANCE DATA FOR EACH SYSTEM, SUB–SYSTEM, AND PIECE OF EQUIPMENT SHALL BE SUBMITTED TO THE OWNER PRIOR TO FINAL PROJECT CLOSEOUT.

5. ONE ORIGINAL AND TWO COPIES OF ALL WARRANTIES (INCLUDING THOSE OFFERED BY THE CONTRACTOR, SUBCONTRACTOR, SUPPLIERS, AND MANUFACTURERS) SHALL BE PROVIDED, NEATLY, IN 3–RING BINDERS WITH DURABLE PLASTIC COVERS.

6. SPARE PARTS, EXTRA MATERIAL, AND PRODUCTS (SUCH AS KEYS OR OTHER HARDWARE) SHALL BE DELIVERED TO THE OWNER PRIOR TO FINAL PAYMENT APPLICATION.

7. ALL CONTRACTOR PERSONNEL (INCLUDING THOSE OF SUBCONTRACTORS, SUPPLIERS, AND MANUFACTURERS) AND ALL EQUIPMENT AND MATERIAL THEREOF, SHALL BE REMOVED FROM THE PROJECT SITE PRIOR TO FINAL PAYMENT APPLICATION; AND ALL AREAS WITHIN THE PROJECT BOUNDARIES SHALL BE RESTORED TO THEIR CONDITION AS SPECIFIED IN THE PLANS OR AS DIRECTED BY THE OWNER.

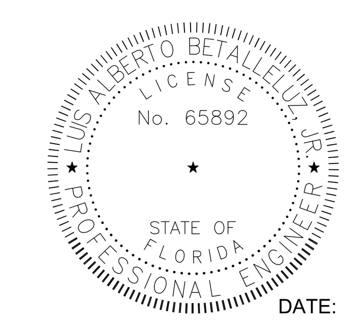

DATE:

Sunshine 811
Call 811 or visit sunshine811.com two full business days before digging to have buried facilities located and marked.
Check positive response codes before you dig!

THE BETA JONES GROUP
A CIVIL ENGINEERING FIRM
EXPEDITING DEVELOPMENT
801 Brickell Avenue
Suite 800
Miami, Florida 33131
PH: 786.284.8828
FAX: 866.312.8730
FLORIDA CERTIFICATE OF AUTHORIZATION # 27431

PROJECT NUMBER: 23106

DRAWN BY: AH	DESIGN BY: AH	CHECK BY: LAB

ORIGINAL DRAWING DATE: 01/04/2023

REVISIONS:

PROJECT NAME:

TOWNHOMES CANAL DRIVE POMPANO

LOCATION:

3233 - 3237 CANAL DRIVE
POMPANO BEACH, FL 33062

FOR:

MR. SERGE MICHAUD
3018 NE 20TH COURT
FT. LAUDERDALE, FL 33305

PLAN STATUS:
SUBMITTAL SET:
FOR AGENCY REVIEW AND APPROVAL

THIS ITEM HAS BEEN DIGITALLY SIGNED AND SEALED BY: LUIS A. BETALLELUZ, P.E. ON THE DATE ADJACENT TO THE SEAL.

PRINTED COPIES OF THIS DOCUMENT ARE NOT CONSIDERED SIGNED AND SEALED AND THE SIGNATURE MUST BE VERIFIED ON ELECTRONIC COPIES

JULY 31, 2024

LUIS A. BETALLELUZ, JR., P.E. FL. P.E.# 65892
(NOT VALID WITHOUT SIGNATURE AND PROPER SEAL)

SHEET NAME:

DETAILS

SHEET NUMBER: C 6.0

E:\ONEDRIVE\...\DATA\PROJECTS\23106 – 3233–3237 POMPANO TH\DWG\PLANS 2013–10–11
DRC
PZ23-12000054
03/05/2025