HABITAT FOR HUMANITY

NW 6TH AVENUE NW 15TH STREET PARCEL

RESIDENTIAL PLANNED UNIT DEVELOPMENT

for 77 single family homes on 9.03 net acres

CITY OF POMPANO BEACH, FL

Submitted June 15, 2017

Prepared for:

Habitat for Humanity

1406-34

LETTER OF TRANSMITTAL

CITY OF POMPANO BEACH
Mr. Robin Bird
Director of Development Services
100 West Atlantic Boulevard
Pompano Beach, Florida 33060

DEVELOPER INFORMATION AND SITE LOCATION

DEVELOPER

Habitat for Humanity of Broward
Nancy Robin
Executive Director
3564 North Ocean Boulevard
Fort Lauderdale, FL 33308
954.396.3030 Ext. 201 Office

ENGINEER/PLANNER/SURVEYOR

HSQ Group, Inc.
Jay M. Huebner, P.E.
1489 W. Palmetto Park Road, Suite 340
Boca Raton, Florida 33486
(561) 392-0221

ARCHITECT

The Benedict Group
Tom Benedict, Architect
1525 N.W. 3rd Street, Suite #1
Deerfield Beach, Fl. 33442
(954) 570-9500 Ext. 12

OWNER REPRESENTATIVE

Sharpe Project Developments, Inc.
1212 S. Andrews Ave. #203
Fort Lauderdale, Fl 33316
(954) 832-9095

LEGAL / AGENT

Michelle J. Gomez, Esq.
Saunders, Curtis, Ginestra & Gore, PA
954-969-9919 x1166 office
954-263-1918 cell
8201 Peters Road, Suite 2001
Fort Lauderdale, FL 33324

Dennis Mele
Greenspoon Marder
200 East Broward Blvd.
Suite 1800
Fort Lauderdale, Fl 33301
(954) 761-2923

LANDSCAPE ARCHITECT

Scott Davidson, RLA
10610 NW 43rhd Street
Coral Springs, Fl 33065
(954) 649-6688

Prepared by:

TABLE OF CONTENTS

SECTION	ITEM	
1.	RPUD PLAN	
2.	STATEMENT OF PLANNING OBJECTIVES FOR THE DISTRICT	
3.	GENERAL SITE INFORMATION	
4.	EXISTING AND PROPOSED USES	
5.	PROJECT DENSITY AND POPULATION	
6.	PROPOSED COMMERCIAL USAGE	
7.	PLAN FOR CIRCULATION, STREETS AND PARKING	
8.	PLAN FOR OPEN SPACE AND RECREATION FACILITY	
9.	PROVISIONS FOR WATER, SEWER AND UTILITIES SERVICES	
10.	CONSISTENCY WITH CITY PLANS	
11.	COMPATIBILITY WIITH SURROUNDING AREAS	
12.	DEVELOPMENT PHASING PLAN	
13.	DEVELOPMENT CONVERSION SCHEDULE	
14.	ON-SITE PUBLIC FACILITIES	
15.	DEDICATION OF LAND TO CITY, COUNTY AND STATE	
16.	USES	
17.	DENSITIES/ INTENSITIES	
18.	DIMENSIONAL STANDARDS	
19.	DEVELOPMENT STANDARDS	
20.	TYPICAL UNIT ALLOWANCES	
21.	SUSTAINABILITY	
22.	TREE PRESERVATION	
23.	MODIFICATIONS - PERIMETER FENCE	
24.	**Exhibit A**	Location map
25.	**Exhibit B**	Legal Description and Survey
26.	**Exhibit C**	Intensity and Dimension Standards
27.	**Exhibit D**	Regulating PD Plan
28.	**Exhibit E**	Typical Unit Landscape Plan
29.	**Exhibit F**	Typical Residential Plans
30.	**Exhibit G**	Ped. Circulation, Rec., Open Space
31.	**Exhibit H**	Building Use Plan
32.	**Exhibit I**	Schematic Utilities Layout
33.	**Exhibit J**	Utility Plan
34.	**Exhibit K**	Phasing plan.

1. RPUD PLAN

A. EXISTING USE:

The existing site is vacant improved land with little vegetation located on the corner of 6 Avenue and NW 15 Street. It is rectangular in shape approximately 480' x 825' or 9.03 Acres.

B. **Habitat for Humanity**

Vision

A world in which everyone has a decent place to live. Revitalize and strengthen the community by building affordable homes throughout Broward County. Teach the youth of future homeowner families the skills and attitudes needed to make better life choices and break the intergenerational cycle of poverty. Increase awareness and educate the community regarding issues related to the affordable housing crisis and what they can do to help. Empower partner families through education, resources and support to successfully achieve their personal, academic and professional goals.

Mission Statement

Seeking to put God's love into action, Habitat for Humanity brings people together to build homes, communities and hope.

Mission Principle

1. Demonstrate the Love of Jesus Christ

2. Focus on Shelter

3. Advocate for Affordable Housing

4. Promote Dignity and Hope

5. Support Sustainable and Transformational Development

Non-Proselytizing Policy

Habitat for Humanity International and its affiliated organizations will not proselytize. Nor will HFH work with entities or individuals who insist on proselytizing as part of their work with HFH. This means that HFH will not offer assistance on the expressed or implied condition that people must adhere to or convert to a particular faith or listen and respond to messaging designed to induce conversion to a particular faith.

C. Legal description of the area proposed project.

PARCEL "A" **ABYSSINIAN BAPTIST CHURCH OF CHRIST**, ACCORDING TO THE PLAT THEREOF, AS RECORDED IN PLAT BOOK 167, AT PAGE 22 OF THE PUBLIC RECORDS OF BROWARD COUNTY FLORIDA.

TOGETHER WITH;

ALL THAT PART OF THE NW ¼ OF THE NE ¼ OF THE NW ¼ LYING WEST OF AND ADJACENT TO NW 6TH AVENUE, LESS THE F.E.C. RAILROAD RIGHT OF WAY OF THE SOUTH 150 FEET AND NORTH 35 FEET WHICH HAS BEEN DEDICATED FOR ROAD RIGHT-OF-WAY OF NW 15TH STREET, ALL IN SECTION 35, TOWNSHIP 48 SOUTH, RANGE 42 EAST, BROWARD COUNTY, FLORIDA;

AND

THE EAST 100 FEET OF THE E ½ OF THE NE ¼ OF THE NW ¼ OF THE NW ¼, EXCEPT THE SOUTH 150 FEET FOR FLORIDA EAST COAST RIGHT-OF-WAY AND EXCEPT THE NORTH 35 FEET THEREOF, DEDICATED FOR STREET RIGHT-OF-WAY, IN SECTION 35, TOWNSHIP 48 SOUTH, RANGE 42 EAST, BROWARD COUNTY, FLORIDA.

2. STATEMENT OF PLANNING OBJECTIVES FOR THE DISTRICT

The following city policies are met as follows:

Policy 01.03.01 – Consider the preservation of established single family neighborhoods in all rezoning, land use plan amendments and site plan approvals.
This project rezoning to RPUD allows for single family homes to be constructed. The RPUD is based upon single family only community to be consistent with the surrounding residential uses and meets the wishes of the community per previous town hall meetings.

Policy 01.03-.05 – All Land Use Plan map amendments and rezoning shall provide for the orderly transition of varying residential land use designations.
The proposed RPUD is a rezoning from RM-12 to RPUD to allow for zero lot line single family units and 5' side setbacks in a residential land use category. The surrounding residential uses are single family RS-4 zoning with a lower density residential use. This amendment allows for a residential transition to higher density while still utilizing single family homes to remain compatible with the surrounding residential community.

Policy 01.03-11 – Consider the compatibility of adjacent land uses in all Land Use Plan amendments and rezoning.
The proposed rezoning from RM-12 to RPUD only allows for single family zero lot line and 5' side setbacks development within the RM-12 zoning district. This does not change the overall use or density of the site. The adjacent uses consist of single family homes to the North, Church to the West, High School to the South and Retail to the East. The adjacent uses are compatible with the proposed residential use as the future residents will utilize the church, retails and school facilities as intended without any adverse effects.

Policy 01.07-05 – Through ongoing updates to the land development regulations provide for townhouses and homeowner's associations.
The proposed project is a single-family home on individual lots located on public city streets. The community does not have any common area and the proposed parks will be owned and operated by the City. There is no need for a homeowner's association for this project.

Policy 01-07-22 – The City's land development code shall include provisions to encourage or enable a variety of housing opportunities in varying price ranges, including housing for low and moderate-income families in large scale residential developments.
This project is a Habitat for Humanity community which provides affordable housing for families looking for assistance with home ownership. This will be the largest Habitat for Humanity project in Broward County to date providing for 77 single family units for home ownership.

Planning Objectives:
The objective of the rezoning is to create a residential plan that allows for affordable housing while still providing single family fee simple ownership. Habitat for Humanity consistently provides affordable single-family homes to deserving families. This particular property is best suited for residential homes, but with a 5' side setback design to maximize the number of units and provide a sustainable environment for its residents. The following objectives are used in the creation of this RPUD:

1. Create a higher density residential single-family home community consistent with the underlying land use.
2. Provide a residential community with transportation facilities. The existing property has bus transit stops adjacent to the site.
3. Discourage urban sprawl. This site is in a well-established residential area and will provide much need affordable housing to the local area.
4. Insure utilities are provided to the site. The property will be developed with potable water, sanitary sewer, drainage facilities and waste management pick up.
5. Provide local parks and pedestrian connectivity. The proposed parks are dedicated to the City with pedestrian connectivity to this site and surrounding neighborhoods.
6. Provide close proximity to local schools. This site is directly adjacent to Blanche Ely High School.
7. Plan the overall site to minimize maintenance obligations of the residents. The overall site design allows easy maintenance by the residents and reduced common area expenses.

3. GENERAL SITE INFORMATION

A. The subject parcel contains approximately 9.03 net acres and 9.96 gross acres and is located at the southwest corner of NW 6th Avenue and NW 15th Street.

B. Proposed site acreage breakdown.

Net site acreage:	9.03 acres.
Pavement/ driveway:	2.42 acres
Sidewalk:	0.34 acres
Building:	1.87 acres
Green area (open Space)	4.35 acres
Right-of-way Dedication:	0.05 acres (5' R/W dedication - NW 6th Ave)
Park dedication:	0.28 acres

R/W dedication (future platted streets) 2.76 acres.

4. EXISTING AND PROPOSED USES:

The existing site consists of 9.03 acres of vacant land. The proposed use consists of 77 single family residential units with one and two stories not exceeding 35' in height.

5. PROJECT DENSITY AND AREA POPULATION

The current site plan for the development has 77 single family units. The units are 3 and 4 bedrooms with an average of 3.5 persons per unit. The anticipated population is 270 residents.

Pompano Demographics Source: https://www.census.gov/quickfacts/table/PST045215/00

Population estimates, July 1, 2015, (V2015)	107,762
iPopulation estimates base, April 1, 2010, (V2015)	99,844
iPopulation, percent change - April 1, 2010 (estimates base) to July 1, 2015, (V2015)	7.90%
iPopulation, Census, April 1, 2010	99,845
Race and Hispanic Origin	
iWhite alone, percent, April 1, 2010 (a)	62.60%
iBlack or African American alone, percent, April 1, 2010 (a)	28.90%
iAmerican Indian and Alaska Native alone, percent, April 1, 2010 (a)	0.30%
iAsian alone, percent, April 1, 2010 (a)	2.40%
iHispanic or Latino, percent, April 1, 2010 (b)	17.50%
iWhite alone, not Hispanic or Latino, percent, April 1, 2010	50.60%
Housing	
iHousing units, April 1, 2010	
Owner-occupied housing unit rate, 2010-2014	
iMedian value of owner-occupied housing units, 2010-2014	$154,900
iMedian selected monthly owner costs -with a mortgage, 2010-2014	$1,498
iMedian selected monthly owner costs -without a mortgage, 2010-2014	$542
iMedian gross rent, 2010-2014	$1,075
Education	
iHigh school graduate or higher, percent of persons age 25 years+, 2010-2014	82.80%
iBachelor's degree or higher, percent of persons age 25 years+, 2010-2014	23.10%
Income and Poverty	
iMedian household income (in 2014 dollars), 2010-2014	$40,534
iPer capita income in past 12 months (in 2014 dollars), 2010-2014	$24,829
iPersons in poverty, percent	22.8%

6. PROPOSED COMMERCIAL USAGE

The RPUD is residential only and does not include any commercial usage.

7. PLAN FOR CIRCULATION, STREETS AND PARKING

The PD plan for this site is shown on Exhibit D. The current site plan consists of a main entrance from NW 6th Avenue. The site has been designed to meet emergency vehicle access and circulation with a secondary access location to NW 15th Street. The parking requirements are as follows:

Parking requirements:

Required parking for Single Family units is 2 spaces per single family unit.

77 units x 2 = 154 parking spaces

2 parking stalls for community park

Total required: 156 spaces.

Parking provided: 156 spaces

Minimum two parking stalls per unit.

Parking stall associated with driveways in front of units will not be striped. Parking must be in designated parking areas. Garages are not allowed to be enclosed or used for any other purpose than parking if the unit owner has more than one vehicle.

Driveways maximum width of 22'.

No parking in street is allowed except for recreational parks public parking. See exhibit H for more information.

Street design:

The streets will be dedicated to the City of Pompano Beach as public streets. The streets will be designed and constructed to City standards as a 50' wide Right-of-way per city detail 305-1.

The streets will be a minimum of 22' wide with two 11-foot wide travel lanes. The streets will meet the minimum city design standards. The pavement design will be incorporated into the final engineering design of 1-1/2" asphalt, 8" rock base and 12" stabilized sub-grade. All interior streets will be posted 25 miles per hour speed limit.

Driveways shall be designed in accordance with the City of Pompano Beach driveway swale section 305-2. Driveways will be constructed out of concrete.

Pedestrian circulation:

A 5' wide sidewalk is located on both sides of the internal streets and will connect to the sidewalk on NW 6th Avenue and NW 15th Street for mass transit or access to adjacent activities. See exhibit G for more information.

8. PLAN FOR OPEN SPACE AND RECREATION FACILITY

The objective for the open space is to provide usable private yard space to the individual homes. A Habitat for Humanity community works best by limiting the amount of common area facilities that would require a Home owner's association and associated monthly dues. A sustainable Habitat for Humanity single family subdivision requires each home owner to be responsible for their property which in turn limits the burden on the residents for common areas to be maintained at additional costs. The back yards are to remain as open space usage and be comprised of grass and landscape materials. No building expansion, sheds or pools are allowed in backyards. The unit owner can provide for a concrete or brick paver patio to a maximum size of 10'x 10' located at the back door. A covered canopy (canvas or aluminum, no enclosures allowed) is allowed over the patio.

The minimum green area for the site is as follows:

Each unit lot must have a minimum of 25% green space (landscape area).

The overall community shall have a minimum of 30% green area including green swales in the proposed right-of-way and proposed parks.

The RPUD plan dedicates to local parks to the City for a total of 0.28 acres. See Exhibit G for more information.

9. PROVISIONS FOR WATER, SEWER AND UTILITY SERVICES

The required municipal and public services, including fire and police protection, will be available to Habitat for Humanity. The entrance is not gated to allow for quick access to the residents for emergency service vehicles.

Fire Hydrants will be installed in accordance with the City of Pompano Beach Code requirements. Health Care facilities are located within the City for expedient service. Other municipal services such as libraries and regional parks are available within reasonable proximity to the property. See attached exhibit I for details.

A. POTABLE WATER AND SANITARY SEWER ANALYSIS

There are currently adequate public water and wastewater facility available to service the proposed project. A future reuse pipe is proposed for irrigation purposes. The city will connect to the reuse line in the future. The general location of the proposed on-site potable water and wastewater facilities are depicted on exhibit I.

B. DRAINAGE ANALYSIS

As required by regulations of the city of Pompano Beach and Broward County, all storm water will be retained on-site. The general location of proposed on-site storm water management facilities will be depicted on the civil engineering drawings submitted with the site plan.

C. ON-SITE PUBLIC FACILITIES

The proposed roadways will be dedicated to the city for public use. The proposed recreational parks will be dedicated to the city for public use. Solid waste, fire protection and other franchised utilities will be provided to the community. The general public will have access to the roads and parks within the project.

10. CONSISTENCY WITH CITY PLANS

The RPUD zoning designation, is consistent with the existing underlying land use designation M (10-16) and the current zoning of R-12. The RM-12 could allow up to 108 possible units, but the proposed RUPD plan has 77 single family units. The surrounding community is residential or community facility supporting residential needs. The proposed use is consistent with the adjacent uses.

11. COMPATIBILTY WITH SURROUNDING AREAS

The subject site is being developed in a manner that ensures the proposed residential development is context sensitive to the adjoining existing uses. The existing and proposed information is as follows:

Current land use categories of surrounding properties.

Direction	Actual use	Land use category
North	Single family homes	(L) Low 1-5 DU/AC
West	Church	(M) 10-16 DU/AC
South	High School	(M) 10-16 DU/AC / CF
East	Retail/ commercial	(C) Commercial

Current and proposed zoning for the amendment site and adjacent areas.

Direction	Actual use	Zoning district
North	Single family homes	RS-4, RS-3
West	Church	CF
South	High School	CF & B-2 R.R.
East	Retail/ commercial	B-2

Existing use of amendment site and adjacent areas.

Amendment Site	Single family homes (proposed)
North	Single family homes
East	Retail
South	School and rail road tracks (R.R.)
West	Church

The building design of the residential homes is one story around the perimeter and two story in the middle to be consistent with the heights of the residential buildings to the North of the property. The overall design of the site allows for public access to the new public parks and pedestrian connectivity to the surrounding community.

12. DEVELOPMENT PHASING PLAN:

The site infrastructure to include roads, water, sewer, drainage, perimeter fencing, park and walls will be constructed in the first phase. The individual homes are built essentially in sequence until the 77 single family units are constructed. A housing phasing plan will be coordinated with the city prior to construction commencement. See Exhibit K for details.

13. DEVELOPMENT CONVERSION SCHEDULE

There is no conversion schedule associated with the residential uses proposed for the project. The land use and zoning does not allow for commercial uses within the property.

14. ON SITE PUBLIC FACILITIES

The developer will be responsible to design, permit and construct the on-site public facilities to include the roads, potable water, sanitary sewer, park and street lighting. The city park will be graded and include landscape materials as shown on the landscape plans submitted with the site plan. See exhibits G, H, I, and J for more information.

15. DEDICATION OF LAND TO CITY, COUNTY AND STATE

The RPUD development will dedicate the internal roadways to the city for city ownership and future maintenance. Dedication of 5' right-of-way to NW 6th Avenue. Dedication of a total of 0.28 acres of park area will be dedicated to the city. Dedication of 2.76 acres of Right-of-way within the site to the City. Please see Exhibit D for location of streets to be dedicated.

16. USES

The RPUD development will allow a maximum of 77 single family residential units. No commercial uses allowed within the development.

17. DENSITIES AND INTENSITIES

The intensity and dimensional standards for the project are provided in Exhibit C.

18. DIMENSIONAL STANDARDS

Proposed RPUD Standards:

A. Streets and entrances will meet the standards as stated in section 8 of this report.
B. Drainage will meet the standards as stated in section 11C of this report.
C. Site lighting will be FPL street lights designed to meet City Code requirements.
D. Standards for building setbacks and allowable uses are shown in Exhibit F.

19. DEVELOPMENT STANDARDS

1. **Landscaping standards:**

2. The landscaping will meet or exceed the City of Pompano Beach Code, Chapter 155, Zoning Code, Article 5 part 2 which pertains to minimum landscaping standards. The developer will provide additional accents at strategic locations within the RPUD to enhance the overall beauty of the entire project. Where possible the shrubs and plantings will be design to drought tolerant Florida native plants and minimize the maintenance requirements for the home owners.

3. A perimeter 5' high fence will be installed along the North, East and West boundaries with appropriate landscaping. A 6' high wall will be placed on the South property line to provide additional landscaping to the train tracks.

4. Typical and standard required internal landscaping will be provided for individual building structures with street trees being provided as per Chapter 155, Article 5.

5. **Traffic Control**.

The traffic control within the site will be to Broward County requirements by using signage and striping to control vehicles as well as pedestrian traffic.

20. TYPICAL UNIT ALLOWANCES AND RESTRICTIONS

See Exhibit D for unit allowance and restrictions

See Exhibit E for lot landscape design.

See Exhibit F for typical lot allowance and layout.

21. SUSTAINABILTY ELEMENTS

This project has a unique sustainability attribute because it is a Habitat for Humanity development. Habitat for Humanity works with motivated families that need financial assistance to become home owners. The organization is a non-for-profit group that works with each family to provide the necessary homeownership skills to be financially and mentally responsible to their investment. If the homeowner defaults on the property and cannot live up to their obligations, then Habitat for Humanity will foreclose on the property and sell it to another family that meets the stringent criteria. Habitat for Humanity is committed to Green design initiatives. Their buildings are designed to green standards and the overall site development is designed with green elements to promote the sustainability for the overall community. Habitat for Humanity provides the loans to the homeowners and maintains a vested interest in the community for the life of the loans to insure the community is successful and maintain property values.

22. TREE PRESERVATION

Landscape and tree preservation shall be in accordance with Code Section 155.5203 Landscaping and Code Section 155.5204 Tree Preservation.

23. MODIFICATIONS - PERIMETER FENCE

The Perimeter fence height under Code Section 155.5302 D.2 requires:

a. No fence or wall within a front yard or a street side yard shall exceed a height of four feet, provided that a fence or wall in a street side yard may be up to six feet in height if set back at least four feet from the street side lot line . Fence posts, including decorative finials, may extend up to six inches above the maximum fence height.
b. No fence or wall within an interior side yard or a rear yard shall exceed a height of six feet.

This proposed development allows for a five-foot-high decorative fence directly on the perimeter property line abutting NW 6th Avenue and NW 15th Street.

EXHIBIT A
LOCATION MAP

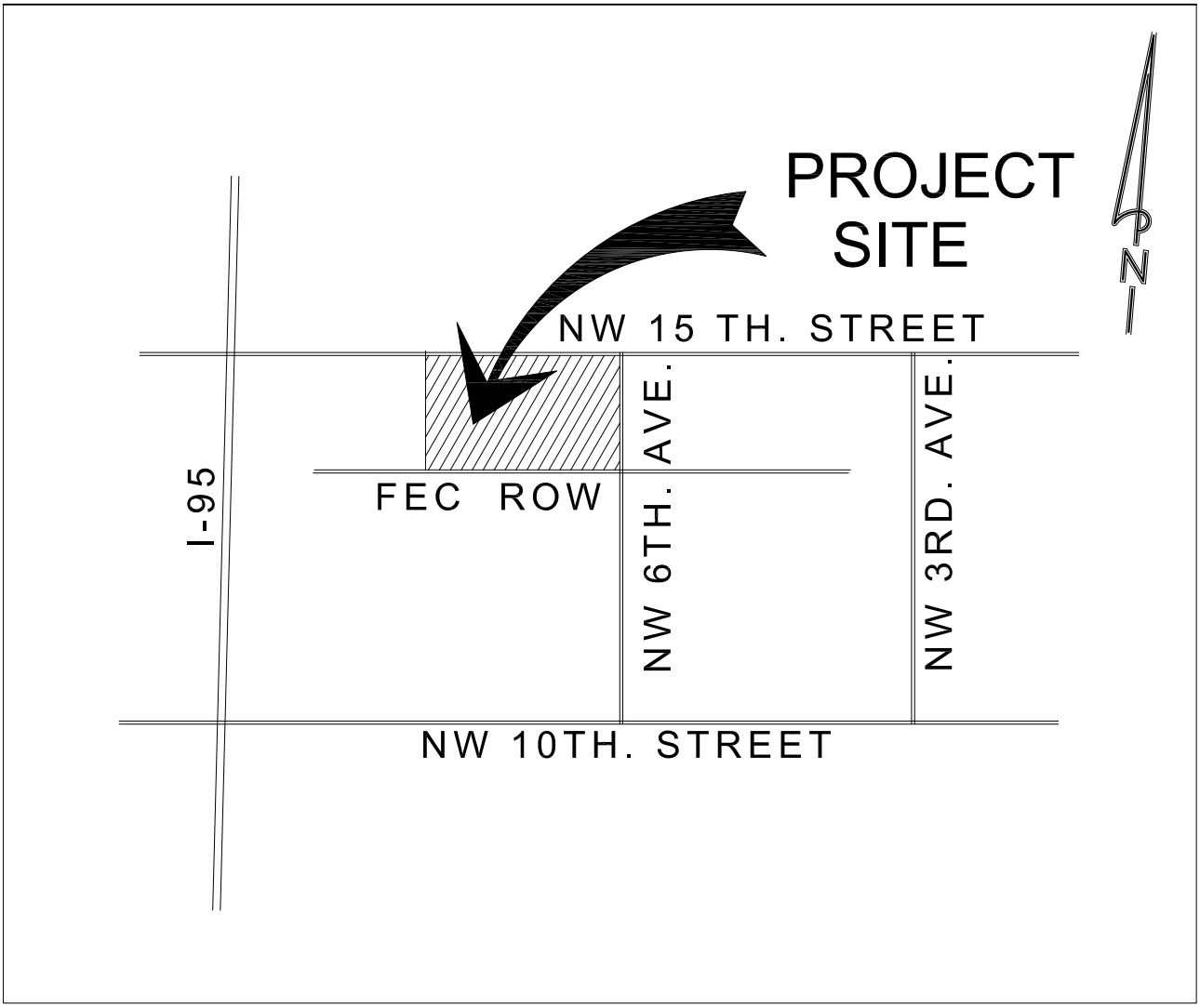

VECINITY MAP

(N.T.S.)

EXHIBIT "A" - LOCATION MAP

EXHIBIT B

Legal Description

Parcel 1

The West 317.42 feet of Parcel "A" of "ABYSSINIAN BAPTIST CHURCH OF CHRIST", according to the Plat thereof as recorded in Plat Book 167, Page 22, of the Public Records of Broward County, Florida. **Folio # 484235750010**

Parcel 2 & 3

All of Parcel A of ABYSSINIAN BAPTIST CHURCH Of CHRIST, recorded in Plat Book 167, Page 22, of the Public Records of Broward County, Florida, further described as follows:

All that part of the Northwest 1/4 of the Northeast 1/4 of the Northwest 1/4 lying West of and adjacent to Northwest 6th Avenue, less the F.E. C. Railroad Right of Way of the South 150 feet and North 35 feet which has been dedicated for road right-of-way of Northwest 15th Street, all in Section 35, Township 48 South,
Range 42 East, Broward County, Florida;

And

The East 100 feet of the East l/2 of the Northeast 1/4 of the Northwest 1/4 of the Northwest 1/4, except the South 150 feet for Florida East Coast right-of-way and except the North 35 feet thereof, dedicated for Street right-of-way, in Section 35, Township 48 South, Range 42 East, Broward County, Florida.

Folio # 4842 35 75 0010 & 4842 35 00 0280

EXHIBIT B
SURVEY

EXHIBIT B

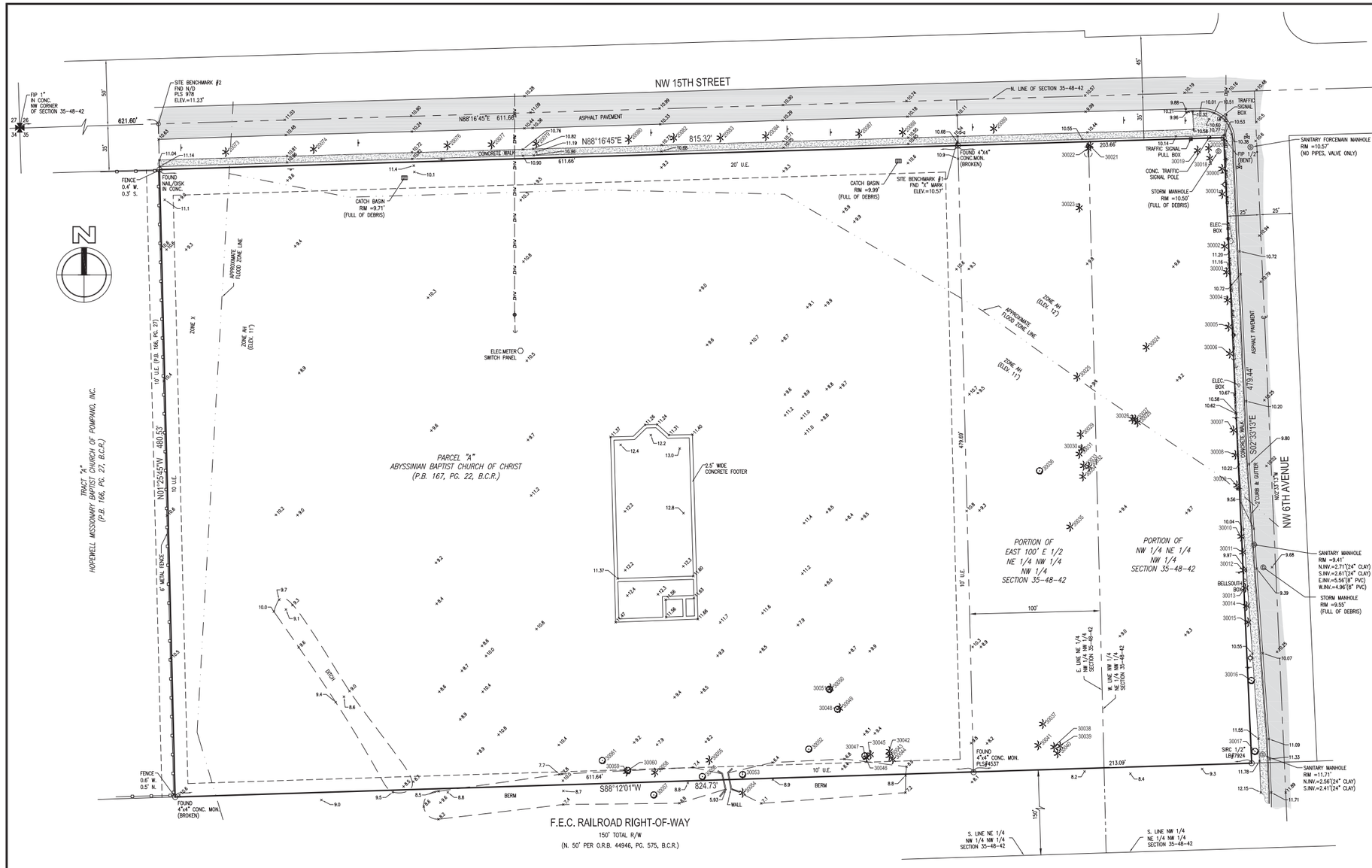

LOCATION MAP
NOT TO SCALE

LEGAL DESCRIPTION

PARCEL "A", ABYSSINIAN BAPTIST CHURCH OF CHRIST, ACCORDING TO THE PLAT THEREOF, AS RECORDED IN PLAT BOOK 167, AT PAGE 22 OF THE PUBLIC RECORDS OF BROWARD COUNTY FLORIDA.

TOGETHER WITH;

ALL THAT PART OF THE NW 1/4 OF THE NE 1/4 OF THE NW 1/4 LYING WEST OF AND ADJACENT TO NW 6TH AVENUE, LESS THE F.E.C. RAILROAD RIGHT OF WAY OF THE SOUTH 150 FEET AND NORTH 35 FEET WHICH HAS BEEN DEDICATED FOR ROAD RIGHT-OF-WAY OF NW 15TH STREET, ALL IN SECTION 35, TOWNSHIP 48 SOUTH, RANGE 42 EAST, BROWARD COUNTY, FLORIDA;

AND

THE EAST 100 FEET OF THE E 1/2 OF THE NE 1/4 OF THE NW 1/4 OF THE NW 1/4, EXCEPT THE SOUTH 150 FEET FOR FLORIDA EAST COAST RIGHT-OF-WAY AND EXCEPT THE NORTH 35 FEET THEREOF, DEDICATED FOR STREET RIGHT-OF-WAY, IN SECTION 35, TOWNSHIP 48 SOUTH, RANGE 42 EAST, BROWARD COUNTY, FLORIDA.

SAID LANDS SITUATE IN THE CITY OF POMPANO BEACH, BROWARD COUNTY, FLORIDA.

NOTES:

1. THIS DRAWING IS NOT VALID WITHOUT THE SIGNATURE AND THE ORIGINAL RAISED SEAL OF A FLORIDA LICENSED SURVEYOR AND MAPPER.
2. THERE HAVE BEEN NO UNDERGROUND IMPROVEMENTS LOCATED IN CONNECTION WITH THIS SURVEY, EXCEPT AS SHOWN.
3. RECORDING INFORMATION REFERS TO BROWARD COUNTY PUBLIC RECORDS UNLESS OTHERWISE INDICATED.
4. THE AREA OF THIS PROPERTY IS 9.035 ACRES, MORE OR LESS.
5. ELEVATIONS SHOWN HEREON ARE RELATIVE TO THE NAVD 88 AND WERE DETERMINED FROM BROWARD COUNTY ENGINEERING BENCHMARK #2621: ELEVATION 10.00' (CONVERTED FROM THE PUBLISHED ELEVATION OF 11.57' NGVD 29).
6. FEMA FLOOD ELEVATION INFORMATION:
   A. FIRM NO.: 12011C0357H
   B. EFFECTIVE DATE: AUGUST 18, 2014
   C. ZONE: AE & AH
   D. BASE FLOOD EL.: 11' & 12'
7. BEARINGS SHOWN HEREON ARE BASED ON THE NORTH LINE OF PARCEL "A", ABYSSINIAN CHURCH OF CHRIST, HAVING AN ASSUMED BEARING OF NORTH 88°16'45" EAST.
8. TREE TYPES WERE DETERMINED TO THE BEST OF OUR KNOWLEDGE. EXACT SPECIES SHOULD BE DETERMINED BY A LICENSED BOTANIST, OR OTHER PROFESSIONAL WITH SUCH CAPACITY.

ABBREVIATIONS:

A = ARC LENGTH
A/C = AIR CONDITIONER
ALUM. = ALUMINUM
B.C.R. = BROWARD COUNTY RECORDS
BOT = BOTTOM
BRKN = BROKEN
CB = CATCH BASIN
C.B.S. = CONCRETE BLOCK & STUCCO
CLF = CHAIN LINK FENCE
CMP = CORRUGATED METAL PIPE
CONC. = CONCRETE
D = DELTA (CENTRAL ANGLE)
D.E. = DRAINAGE EASEMENT
ELEV. = ELEVATION
F.F. = FINISHED FLOOR
FIP = FOUND IRON PIPE
FIR/C = FOUND IRON ROD W/CAP
FIR = FOUND IRON ROD
FND. = FOUND
ICV = IRRIGATION CONTROL VALVE
INV = INVERT
L.B. = LANDSCAPE BUFFER
MON. = MONUMENT
N/D = NAIL AND DISC
P.B. = PLAT BOOK
PG. = PAGE
R = RADIUS
R/W = RIGHT-OF-WAY
SIR/C = SET 1/2" IRON ROD W/CAP LB7924
SMH = SANITARY SEWER MANHOLE
SN/D = SET NAIL & DISC LB7924
SQ. = SQUARE
STY. = STORY
TCB = TRAFFIC CONTROL BOX
TYP. = TYPICAL
U.E. = UTILITY EASEMENT
WV = WATER VALVE

LEGEND:

BACKFLOW PREVENTER
BOLLARD
CABLE BOX
CATCH BASIN
CENTERLINE
CLEANOUT
ELEVATION
FIRE HYDRANT
MANHOLE, DRAINAGE
MANHOLE, SANITARY
NON-VEHICULAR ACCESS LINE
POLE, LIGHT
POLE, WOOD
SIGN
TREE
VALVE, WATER
WATER METER
WIRES, OVERHEAD
TREE
TREE NUMBER

TREE No.	TREE - COMMON NAME	DIAMETER at BREAST HEIGHT (in inches)	TREE HEIGHT (in feet)	CANOPY DIAMETER (in feet)
20073	COCONUT PALM	8	15	15
20074	COCONUT PALM	8	10	12
20076	COCONUT PALM	8	20	15
20077	COCONUT PALM	8	20	15
20079	COCONUT PALM	8	15	15
20080	COCONUT PALM	10	20	20
20082	COCONUT PALM	8	15	15
20083	COCONUT PALM	8	15	15
20084	COCONUT PALM	8	20	18
20087	COCONUT PALM	6	8	15
20088	COCONUT PALM	8	15	15
20089	COCONUT PALM	8	10	15
30000	CHRISTMAS PALM	2.5	8	10
30001	CHRISTMAS PALM	2.5	8	10
30002	CHRISTMAS PALM	2.5	8	10
30003	CHRISTMAS PALM	2.5	8	10
30004	CHRISTMAS PALM	2.5	8	10
30005	CHRISTMAS PALM	2.5	8	10
30006	CHRISTMAS PALM	2.5	8	10
30007	CHRISTMAS PALM	2.5	8	10
30008	CHRISTMAS PALM	2.5	8	10
30009	CHRISTMAS PALM	2.5	8	10

TREE No.	TREE - COMMON NAME	DIAMETER at BREAST HEIGHT (in inches)	TREE HEIGHT (in feet)	CANOPY DIAMETER (in feet)
30010	CHRISTMAS PALM	8	30	12
30011	CHRISTMAS PALM	8	30	12
30012	CHRISTMAS PALM	8	30	12
30013	CHRISTMAS PALM	8	30	12
30014	CHRISTMAS PALM	8	30	12
30015	CHRISTMAS PALM	8	30	12
30016	LIVE OAK	4	12	8
30017	UNKNOWN	7	15	15
30018	CHRISTMAS PALM	6	20	12
30019	CHRISTMAS PALM	6	15	12
30020	UNKNOWN PALM	12	8	15
30021	CABBAGE PALM	15	6	12
30022	CABBAGE PALM	15	6	12
30023	CABBAGE PALM	14	16	12
30024	CABBAGE PALM	15	15	12
30025	CABBAGE PALM	15	10	12
30026	CABBAGE PALM	15	30	15
30027	CABBAGE PALM	15	20	15
30028	CABBAGE PALM	15	20	15
30029	CABBAGE PALM	18	20	15
30030	CABBAGE PALM	18	20	15
30031	CABBAGE PALM	15	6	12

TREE No.	TREE - COMMON NAME	DIAMETER at BREAST HEIGHT (in inches)	TREE HEIGHT (in feet)	CANOPY DIAMETER (in feet)
30032	CABBAGE PALM	15	12	12
30033	CABBAGE PALM	15	30	15
30034	CABBAGE PALM	18	10	15
30035	CABBAGE PALM	15	10	12
30036	FICUS	15	15	30
30037	CABBAGE PALM	18	8	15
30038	CABBAGE PALM	18	20	15
30039	CABBAGE PALM	18	8	12
30040	CABBAGE PALM	18	6	12
30041	CABBAGE PALM	15	10	12
30042	CABBAGE PALM	10	12	12
30043	CABBAGE PALM	10	12	12
30044	CABBAGE PALM	10	12	12
30045	CABBAGE PALM	10	12	12
30046	CABBAGE PALM	10	12	12
30047	BANYAN	12	15	30
30048	BANYAN	12	15	30
30049	CABBAGE PALM	18	18	12
30050	CABBAGE PALM	18	12	12
30051	BANYAN	10	15	10
30052	UNKNOWN	6	10	12
30053	LIVE OAK	6	15	20

TREE No.	TREE - COMMON NAME	DIAMETER at BREAST HEIGHT (in inches)	TREE HEIGHT (in feet)	CANOPY DIAMETER (in feet)
30054	CABBAGE PALM	18	6	12
30055	CABBAGE PALM	18	6	12
30056	LIVE OAK	4	10	10
30057	LIVE OAK	6	15	12
30058	CABBAGE PALM	15	12	12
30059	CABBAGE PALM	15	12	12
30060	BANYAN	10	15	20
30061	LIVE OAK	4	10	8

SURVEYOR'S CERTIFICATION:

I HEREBY CERTIFY THAT THE SURVEY SHOWN HEREON MEETS THE STANDARDS OF PRACTICE FOR LAND SURVEYS CONTAINED IN CHAPTER 5J-17 OF THE FLORIDA ADMINISTRATIVE CODE PURSUANT TO CHAPTER 472.027, FLORIDA STATUTES.

_____
DONNA C. WEST
PROFESSIONAL SURVEYOR AND MAPPER
FLORIDA REGISTRATION NO. LS4290

LAST DATE OF FIELD SURVEY: 01/05/15

NO.	DATE	BY	CK'D	REVISIONS	FB/PG
1	12/31/14	LMK	DCL	ADD IMPROVEMENTS, TOPOGRAPHY, AND TREES	22/25

SCALE: 1"=40'
DATE: 07/01/14
DRAWN BY: DCL
FIELD BOOK: 013/44
CHECKED BY: DCW
SURVEY TYPE: BOUNDARY

HSQ GROUP, INC.
Engineers · Planners · Surveyors
1489 West Palmetto Park Road, Suite 340
Boca Raton, Florida 33486 · 561.392.0221
CA26258 · LB7924

MAP OF BOUNDARY, TOPOGRAPHIC, AND TREE SURVEY
"HABITAT ABYSSINIAN"
CITY OF POMPANO BEACH, BROWARD COUNTY, FLORIDA

PROJECT NUMBER
1406-34

SHEET NUMBER
1 OF 1

Z:\Survey Projects\2014\1406-34S Habitat Abyssinian\dwg\140634surv.dwg, 12/3/2015 11:22:40 AM

EXHIBIT C
INTENSITY AND DIMENSION STANDARDS

EXHIBIT C

INTENSITY AND DIMENSION STANDARDS

INTENSITY AND DIMENSION STANDARDS		RM-12	RPUD	RELIEF AMOUNT	Justification
Lot Area, min. (Square Feet)		7000	1976	5,024 sf	(1)
Lot Width (Feet)	Lot for Two Story Home	60	36	24	(2)
	Lot for One Story Home		40	20	
Density		12	12	0	
Floor Area per Dwelling, min. (Square Feet)		950	1200	0	
Lot Coverage, max. %		60	60	0	
Individual Lot Pervious Area, min.%		25	40	0	
Overall Pervious Area, min %		25	45	0	
Height, max (feet)		35	35	0	
Front Yard Setback, min (feet)	Lot for One Story Home	25	20	5	(3)
	Lot for two Story Home		25	0	
Street Side Setback, min (feet)		8	10	0	
Interior Yard Setback, min (feet)		8	5	3	(4)
Required Front Yard Pervious Area %		50	40	10	(5)
Rear yard setback, min (Feet)		10	10	0	Allow 10 X 10 uncovered Patio Only-all lots(7)
			5	5	Allow 10'x10' covered patio(6)
			10	0	Allow 10 X 5 Covered Patio (7)

JUSTIFICATION

(1)
The Habitat for Humanity builds single family homes approximately 1200 square feet in size. The units have been designed to fit on a smaller lot to provide more homes for people who need housing.

(2)
Lush landscaping will be provided to enhance the space between homes.

(3)
One story building type units on lots 1-42 have a covered front porch allowing for residents to sit in the front yard and provide neighbor friendly streetscape.
Typical 4', but max 5' porch is within the 25' building setback.

(4)
Lots have minimum 5' side setback allowing for 10' between buildings. Roof overhangs and gutters are within the 5' side setback. No fences or structural equipment allowed on side of building. Various home styles with landscaping will enhance the appearance of the community.

(5)
The 36' wide lot with an 18' wide driveway allows for 50% pervious except for additional sidewalks to the house
The additional walkways are in the front setback and for this reason the 10% reduction is necessary.

(6)
Rear setback to allow 10'x10' covered canopy over patio in rear yard to provide shade for owners while utilizing the backyard for lots 1-28
See Exhibit F for lot allowances in rear setback. All other units meet the 10' rear setback requirement.

(7)
Lots 29 thru 47 have rear yards facing NW 6th Avenue and NW 15th Street.
Front yards faces NW 6th Terrace and NW 14th Court.
Allow homes on NW 15th St. and NW6th Ave. to considered rear yards along streets.
Allow 5' high along NW 6th Avenue and NW 15th Street where code requires 4' high fence to provide additional security.

EXHIBIT D
REGULATING PLAN PD

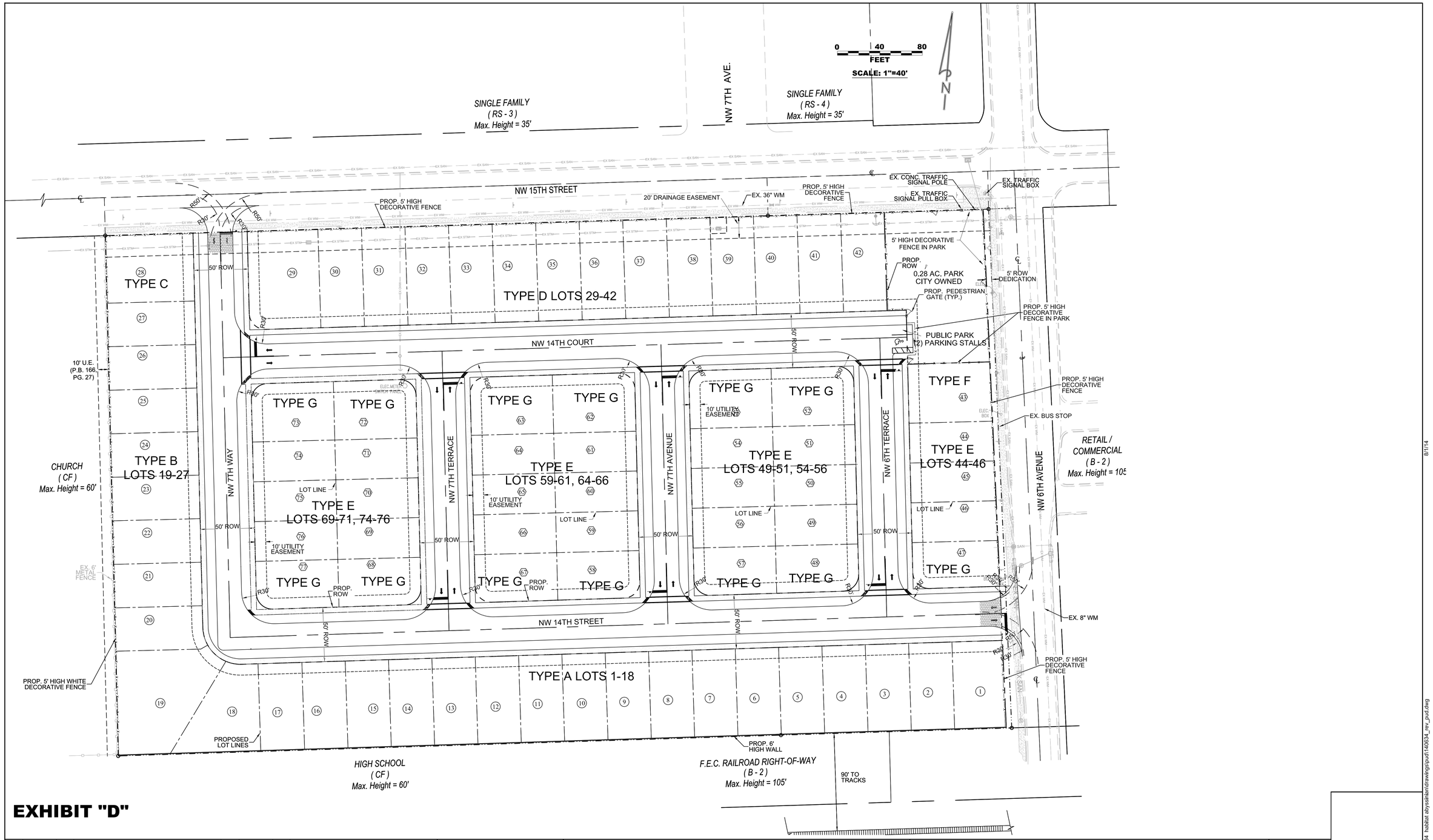

EXHIBIT "D"

NO.	DATE	BY	REVISIONS	NO.	DATE	BY	REVISIONS

Designed by: JH Date: 01/15
Drawn by: AZ Date: 01/15
Checked by: JH Date: 01/15

HSQ GROUP, INC.
Engineers · Planners · Surveyors
1489 West Palmetto Park Road, Suite 340
Boca Raton, Florida 33486 · 561.392.0221
C26258 · LB7924

A RICK CASE HABITAT COMMUNITY

PD PLAN

SCALE: 1" = 40'
PROJECT NUMBER: 1406-34
SHEET NUMBER: EXHIBIT D

Date: 6/12/17
Approved by: JAY HUEBNER, P.E.
Registered Engineer No: 54615
State of Florida

8/1/14

z:\projects\2014\1406-34 habitat abyssinian\drawings\pud\140634_rev_pud.dwg

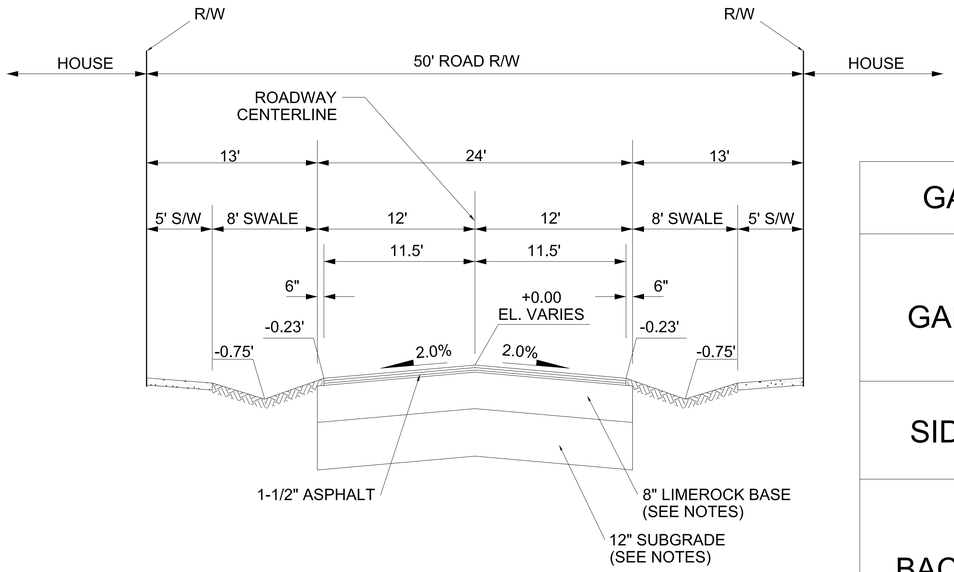

TYPICAL ROAD SECTION

N.T.S.

UNIT ALLOWANCE AND RESTRICTIONS

THE INDIVIDUAL UNITS ARE FEE SIMPLE ONLY AND CANNOT BE CONVERTED TO RENTAL PROPERTY. THE HOMES ARE CONSTRUCTED TO HABITAT FOR HUMANITY STANDARDS.

GARAGE	1. THE HOME OWNER IS NOT ALLOWED TO CONVERT THE GARAGE. THE UNIT OWNER IS REQUIRED TO MANTAIN TWO PARKING STALLS AT ALL TIMES TO INCLUDE THE GARAGE AREA.
GARBAGE	2. GARBAGE AND RECYCLING ARE CURB SIDE PICKUP. EACH UNIT OWNER WILL BE RESPONSIBLE FOR CARRYING THEIR GARBAGE AND RECYCLING TO THE STREET AND REMOVING THE EMPTY CONTAINERS IN A TIMELY MANNER. GARBAGE AND RECYCLING CONTAINERS SHALL BE PLACED EITHER IN THE GARAGE OR ON THE SIDE OF THE HOME OUT OF SIGHT FROM THE STREET.
SIDE YARD	3. NO STRUCTURAL IMPROVEMENTS SHALL BE PLACED IN THE SIDE SETBACKS. NO FENCING OR LANDSCAPING SHALL BE PLACED IN DRAINAGE SWALES THAT WOULD PROHIBIT THE FLOWAGE OF STORMWATER.
BACK YARD	4. THE BACK YARDS ARE TO REMAIN AS OPEN SPACE USAGE AND BE COMPRISED OF GRASS AND LANDSCAPE MATERIALS. 5. NO BUILDING EXPANSION, SHEDS OR POOLS ARE ALLOWED. THE UNIT OWNER IS ALLOWED TO PROVIDE FOR A CONCRETE OR BRICK PAVER PATIO TO A MAX. SIZE OF 10'X10' LOCATED AT THE BACK DOOR. 6. A COVERED CANOPY OR EXTENDED ROOF AWNING IS ALLOWED OVER THE PATIO. SEE EXHIBIT F.
FENCING	7. INDIVIDUAL LOT OWNERS CAN PROVIDE A FENCE ON THE SIDE YARD PROPERTY LINE. THE FENCE SHALL BEGIN AT THE BACK WALL OF THE HOUSE AND MAY EXTEND 10' INTO THE BACKYARD. THE FENCE HEIGHT SHALL BE 5' HIGH. A BACKARD FENCE MAY BE INSTALLED BY THE UNIT OWNER. THE UNIT OWNER IS RESPONSIBLE FOR MAINTAINING THE EASEMENT AREA WITHIN THE PRIVATE LOT. SEE EXHIBIT F FOR THE LOCATION OF FENCE FOR TYPICAL LOTS.
FRONT YARD	8. SINGLE STORY UNITS MAY ALLOW COVERED PATIO 5 FEET WITHIN FRONT 25 FEET SETBACK. PATIO AREA CAN NO BE ENCLOSED.

MASTER SITE TABLE

CURRENT USE:	SINGLE FAMILY RESIDENTIAL		
LAND USE DESIGNATION:	M (10-16)		
PROPOSED ZONING DESIGNATION:	RPUD		
TOTAL AREA:	393,544.8 SF	9.03 AC	100.00 %

INTENSITY AND DIMENTIONAL STANDARDS:		
CURRENT USE:	SINGLE FAMILY UNITS	
MINIMUM LOT AREA:	36' x 76' = 2,736 SF TO 3,600 SF MAX.	
MAXIMUM BUILDING HEIGHT:	2 STORIES (35')	
MINIMUM LOT WIDTH:	36'	
MAXIMUM IMPERVIOUS AREA:	2,000 SF PER LOT.	
DWELLING UNITS COUNT:		
DENSITY 8.63 DU/AC	77 TOTAL NUMBER OF UNITS	
FOOTPRINT COVERAGE:		
TOTAL BUILDINGS FOOT PRINT:	81,261.25 SF	1.89 AC
MAXIMUM INDIVIDUAL BUILDING SIZE:	2,000. 00 SF	
INDIVIDUAL LOT COVERAGE: (INCLUDES COVERED PORCH, SEE EXHIBIT F)	60 % MAX.	

PARKING DATA:

REQUIRED:

77 X 2 = 154 SPACES

NOTES: PARKING STALL ASSOCIATED WITH DRIVEWAYS IN FRONT OF UNITS WILL NOT BE STRIPED. PARKING MUST BE IN DESIGNATED PARKING AREAS.
SIDEWALK REMAIN CLEAR FOR PEDESTRIAN.
NO ON-STREET PARKING EXCEPT FOR 2 SPACES IN PARK..
GARAGE MUST BE USED FOR PARKING

8/1/14

EXHIBIT "D"

NO.	DATE	BY	REVISIONS	NO.	DATE	BY	REVISIONS

Designed by: JH Date: 01/15
Drawn by: AZ Date: 01/15
Checked by: JH Date: 01/15

HSQ GROUP, INC.
Engineers · Planners · Surveyors
1489 West Palmetto Park Road, Suite 340
Boca Raton, Florida 33486 · 561.392.0221
C26258 · LB7924

A RICK CASE HABITAT COMMUNITY

PD NOTES

SCALE: NTS
PROJECT NUMBER: 1406-34
SHEET NUMBER: EXHIBIT D

Date: 6/12/17
Approved by: JAY HUEBNER, P.E.
Registered Engineer No: 54615
State of Florida

z:\projects\2014\1406-34 habitat abyssinian\drawings\pud\140634_rev_pud.dwg

EXHIBIT E
LANDSCAPE PLAN

EXHIBIT "E"

All exterior equipment will be screened on all sides. Location shown is approximate, equipment may be located in rear or anywhere along side of home. Hedges used to screen the equipment shall be permitted to grow and be maintained at 6 inches above the equipment to be screened.

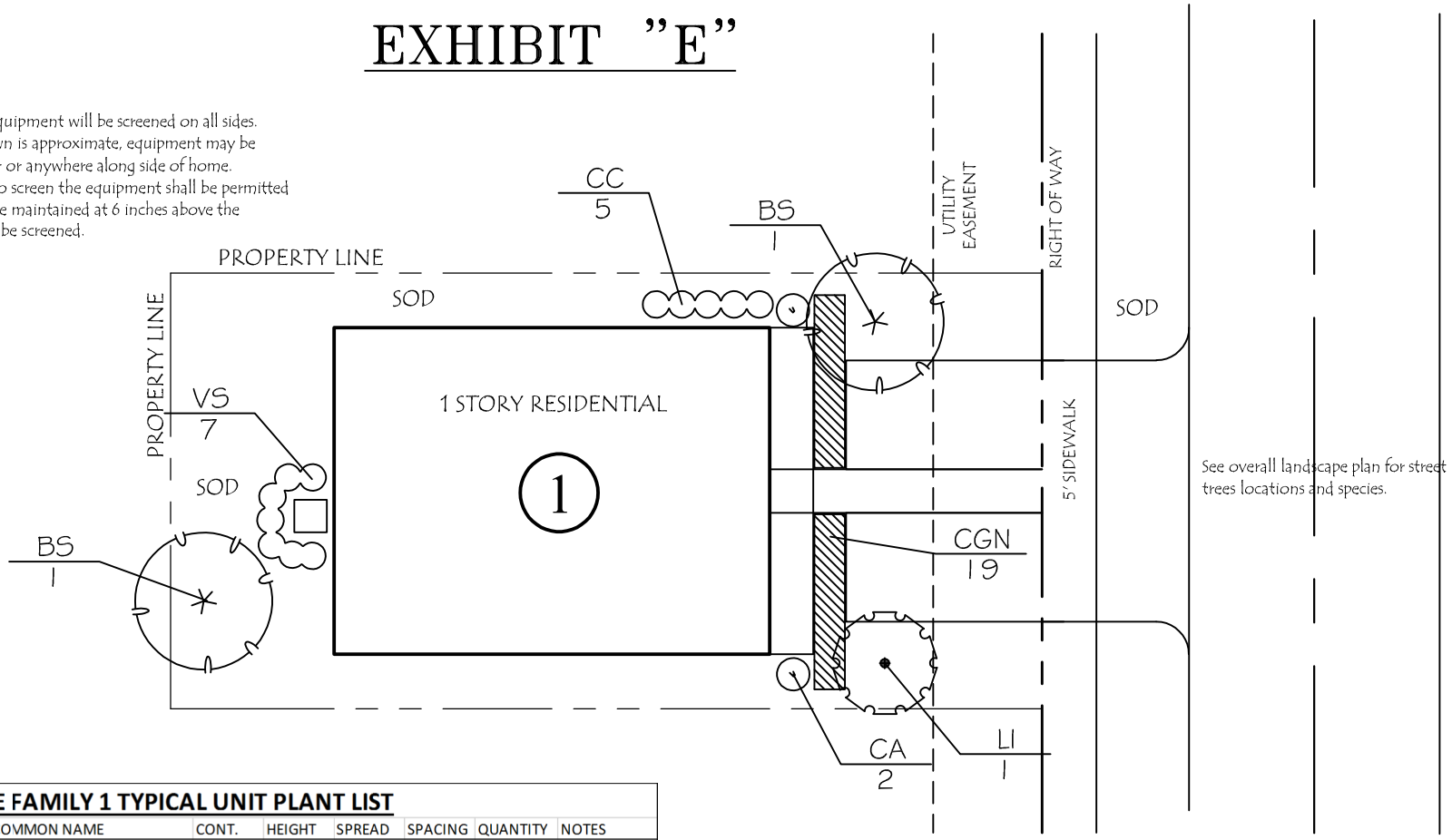

See overall landscape plan for street trees locations and species.

SINGLE FAMILY 1 TYPICAL UNIT PLANT LIST

SYMBOL	BOTANICAL NAME	COMMON NAME	CONT.	HEIGHT	SPREAD	SPACING	QUANTITY	NOTES
TREES								
BS	Busera simaruba	Gumbo Limbo	B&B	14'	4'		2	
LI	Lagerstroemia x 'Tuskegee'	Tuskegee Crape Myrtle	B&B	12'	4'		1	Standard
SHRUBS AND GROUNDCOVER								
CA	Crinum augustum 'Queen Emma'	Queen Emma Lily	15 gallon			as shown	2	
CC	Capparis cynophallophora	Jamaica Caper	3 gallon	24"	24"	24" O.C.	5	
VS	Viburnum odoratissimum	Sweet Viburnum	3 gallon	24"	18"	24" O.C.	7	
CGN	Clusia guttifera 'Nana'	Dwarf Small Leaf Clusia	3 gallon	15"	15"	24" O.C.	19	

SPECIFIED SIZES ARE MINIMUM REQUIREMENTS FOR MATERIAL. CONTAINER SIZE IS FOR REFERENCE ONLY.
SOD - ST. AUGUSTINE 'FLORATAM' - VERIFY SQUARE FOOTAGE IN FIELD

SINGLE FAMILY 1 TYPICAL UNIT PLANTING PLAN

SCALE: 1/16" = 1'-0"

SEAL:
REGISTERED LANDSCAPE ARCHITECT
CHRISTOPHER SCOTT DAVIDSON
LA 0001419
STATE OF FLORIDA
Date:

DAVIDSON DESIGN STUDIO, INC.
LANDSCAPE ARCHITECTURE & SITE PLANNING
10610 NW 43rd Street
Coral Springs, Florida 33065
(954) 649-6688
CERTIFICATE # LC26000437

PROJECT:
A RICK CASE HABITAT COMMUNITY
POMPANO BEACH, FLORIDA
HABITAT FOR HUMANITY
3564 NORTH OCEAN BOULEVARD
FT. LAUDERDALE, FLORIDA 33308

DATE: 6/12/2017

SHEET: PP-1

EXHIBIT "E"

All exterior equipment will be screened on all sides.
Location shown is approximate, equipment may be located in rear or anywhere along side of home.
Hedges used to screen the equipment shall be permitted to grow and be maintained at 6 inches above the equipment to be screened.

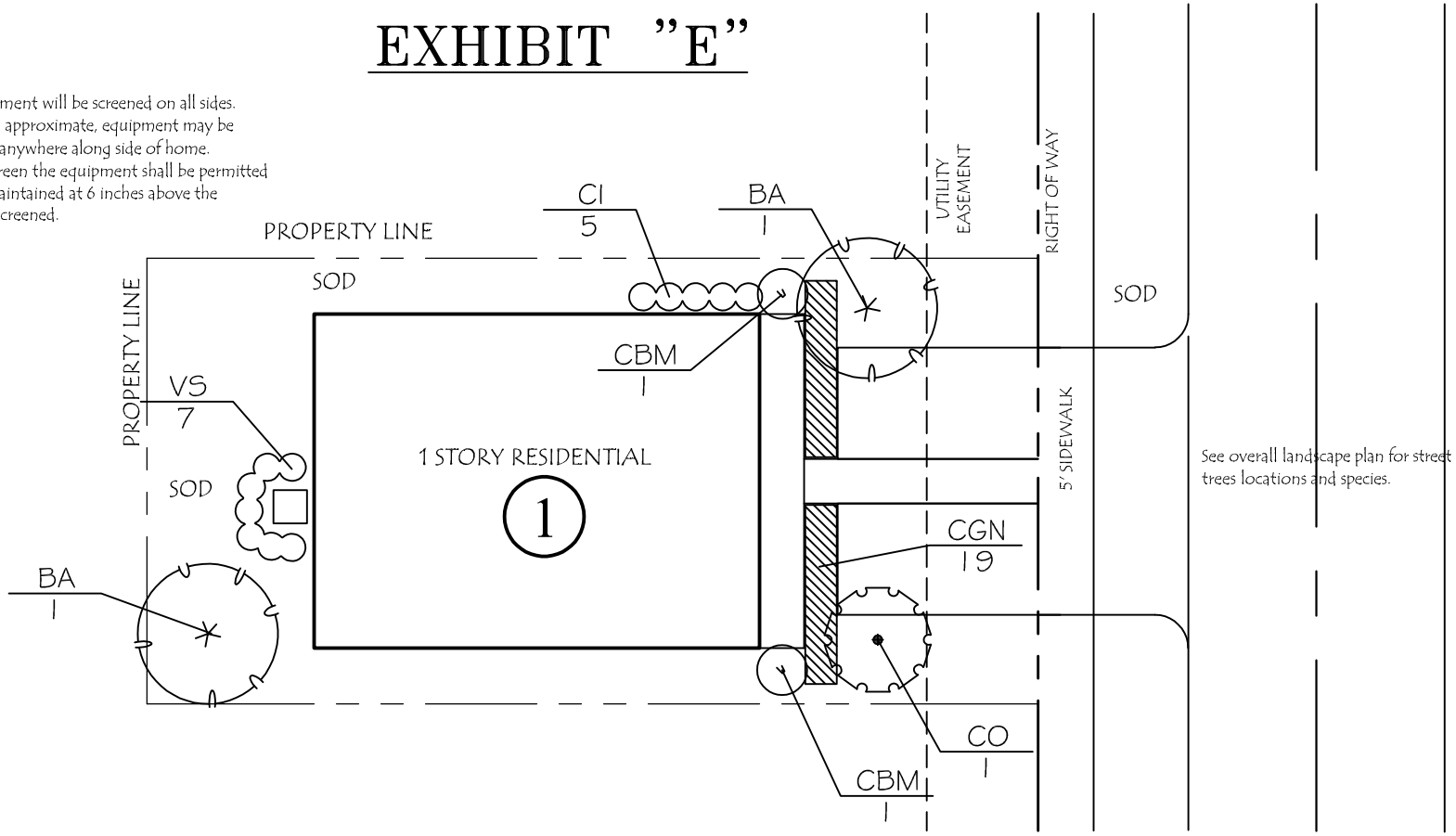

SINGLE FAMILY 1 TYPICAL UNIT PLANT LIST

SYMBOL	BOTANICAL NAME	COMMON NAME	CONT.	HEIGHT	SPREAD	SPACING	QUANTITY	NOTES
TREES								
BA	Bulnesia arborea	Verawood	B&B	14'	4'		2	
CO	Codia sebestena	Orange Geiger	45 gallon	12'	4'		1	Standard
SHRUBS AND GROUNDCOVER								
CBM	Cordyline fruticosa 'Black Magic'	Black Magic Ti Plant	7 gallon	3'	2'	as shown	2	3 plants/pot
CI	Chrysobalanus icaco 'Red Tip'	Red-Tip Cocoplum	3 gallon	24"	18"	24" O.C.	5	
VS	Viburnum odoratissimum	Sweet Viburnum	3 gallon	24"	18"	24" O.C.	7	
CGN	Clusia guttifera 'Nana'	Dwarf Small Leaf Clusia	3 gallon	15"	15"	24" O.C.	19	

SPECIFIED SIZES ARE MINIMUM REQUIREMENTS FOR MATERIAL. CONTAINER SIZE IS FOR REFERENCE ONLY.
SOD - ST. AUGUSTINE 'FLORATAM' - VERIFY SQUARE FOOTAGE IN FIELD

SINGLE FAMILY 1 TYPICAL UNIT PLANTING PLAN

SCALE: 1/16" = 1'-0"

SEAL:
REGISTERED LANDSCAPE ARCHITECT
CHRISTOPHER SCOTT DAVIDSON
LA 0001419
STATE OF FLORIDA
Date: _____

DAVIDSON DESIGN STUDIO, INC.
LANDSCAPE ARCHITECTURE & SITE PLANNING
10610 NW 43rd Street
Coral Springs, Florida 33065
(954) 649-6688
CERTIFICATE # LC26000437

PROJECT:
A RICK CASE HABITAT COMMUNITY
POMPANO BEACH, FLORIDA
HABITAT FOR HUMANITY
3564 NORTH OCEAN BOULEVARD
FT. LAUDERDALE, FLORIDA 33308

DATE: 6/12/2017

SHEET: PP-1A

EXHIBIT "E"

All exterior equipment will be screened on all sides.
Location shown is approximate, equipment may be located in rear or anywhere along side of home.
Hedges used to screen the equipment shall be permitted to grow and be maintained at 6 inches above the equipment to be screened.

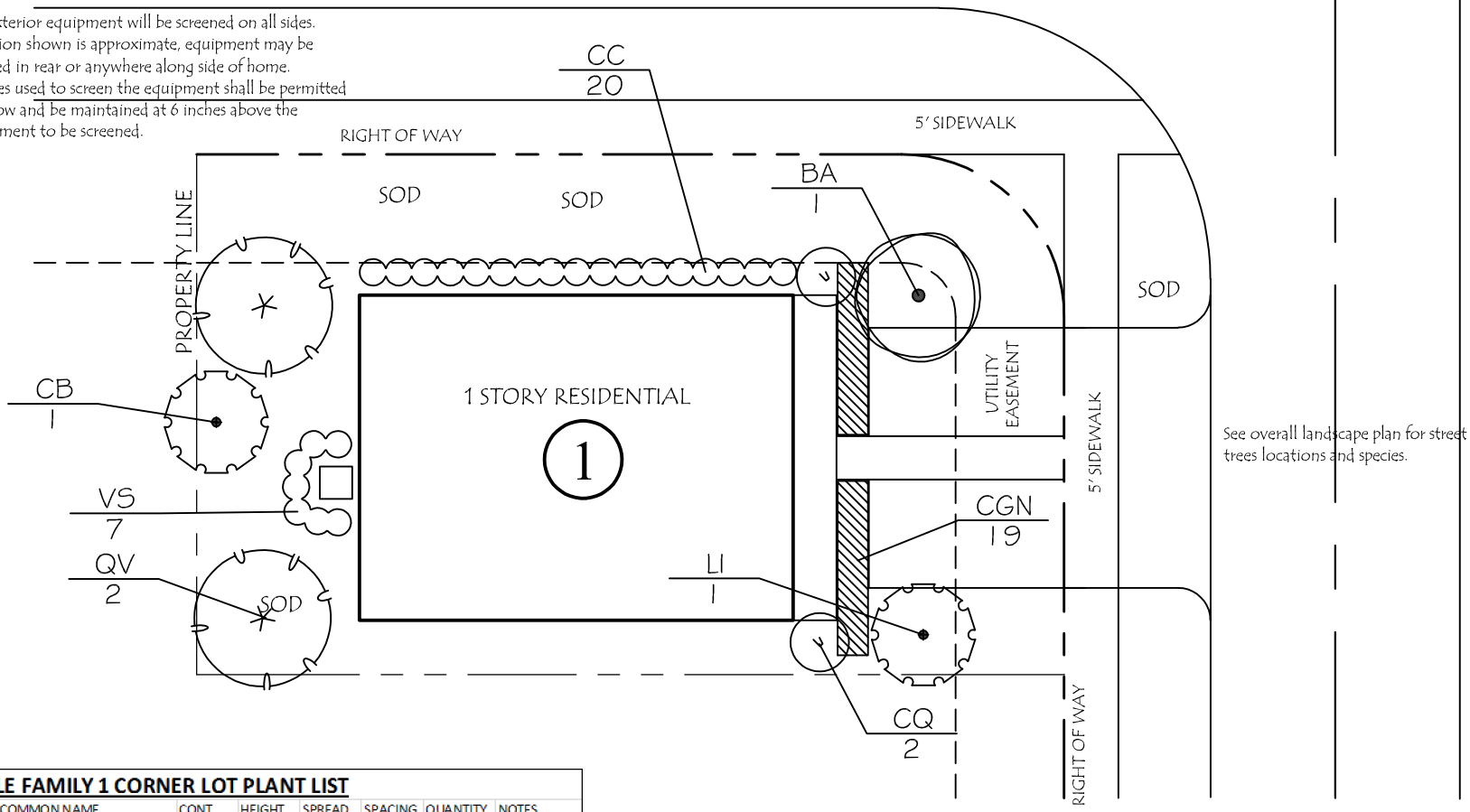

See overall landscape plan for street trees locations and species.

SINGLE FAMILY 1 TYPICAL UNIT CORNER LOT PLANTING PLAN
SCALE: 1/16" = 1'-0"

SINGLE FAMILY 1 CORNER LOT PLANT LIST

SYMBOL	BOTANICAL NAME	COMMON NAME	CONT.	HEIGHT	SPREAD	SPACING	QUANTITY	NOTES
TREES								
BA	Bulnesia arborea	Verawood	B&B	14'	4'		1	
QV	Quercus virginiana	Live Oak		14'	4'		3	Container grown
LI	Lagerstroemia x 'Tuskegee'	Tuskegee Crape Myrtle	B&B	12'	4'		1	Standard
CB	Cordia boissieri	White Geiger Tree	B&B	10'	3'		1	Standard
SHRUBS AND GROUNDCOVER								
CQ	Clerodendron quadriloculare	Starburst Clerodendron	7 gallon	3'	3'	as shown	2	
CC	Capparis cynophallophora	Jamaica Caper	3 gallon	24"	24"	24" O.C.	20	
VS	Viburnum odoratissimum	Sweet Viburnum	3 gallon	24"	18"	24" O.C.	7	
CGN	Clusia guttifera 'Nana'	Dwarf Small Leaf Clusia	3 gallon	15"	15"	24" O.C.	19	

SPECIFIED SIZES ARE MINIMUM REQUIREMENTS FOR MATERIAL. CONTAINER SIZE IS FOR REFERENCE ONLY.
SOD - ST. AUGUSTINE 'FLORATAM' - VERIFY SQUARE FOOTAGE IN FIELD

SEAL:
REGISTERED LANDSCAPE ARCHITECT
CHRISTOPHER SCOTT DAVIDSON
LA 0001419
STATE OF FLORIDA
Date: _____

DAVIDSON DESIGN STUDIO, INC.
LANDSCAPE ARCHITECTURE & SITE PLANNING
10610 NW 43rd Street
Coral Springs, Florida 33065
(954) 649-6688
CERTIFICATE # LC26000437

PROJECT:
A RICK CASE HABITAT COMMUNITY
POMPANO BEACH, FLORIDA
HABITAT FOR HUMANITY
3564 NORTH OCEAN BOULEVARD
FT. LAUDERDALE, FLORIDA 33308

DATE: 6/12/2017

SHEET: PP-2

EXHIBIT "E"

All exterior equipment will be screened on all sides.
Location shown is approximate, equipment may be located in rear or anywhere along side of home.
Hedges used to screen the equipment shall be permitted to grow and be maintained at 6 inches above the equipment to be screened.

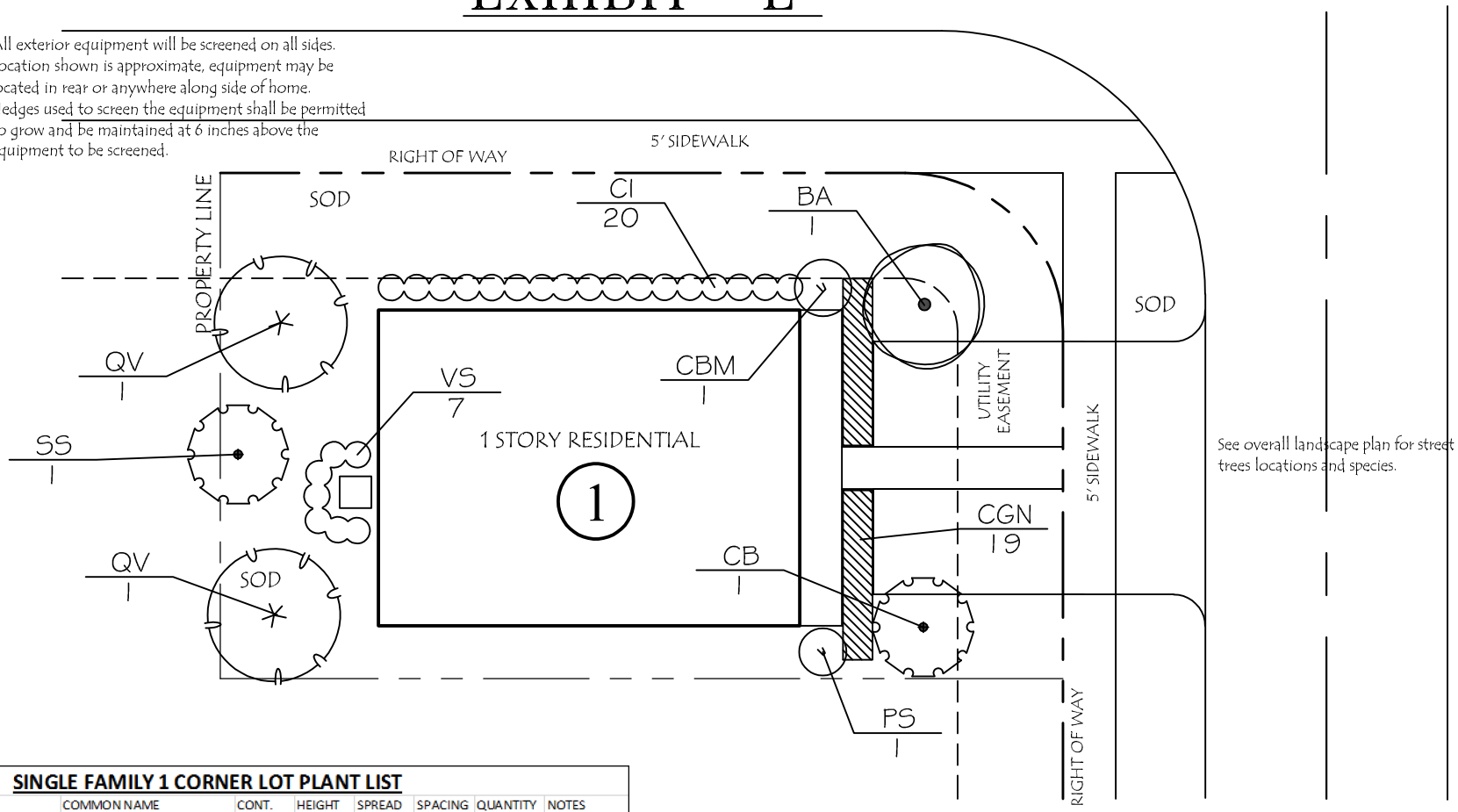

See overall landscape plan for street trees locations and species.

SINGLE FAMILY 1 CORNER LOT PLANT LIST

SYMBOL	BOTANICAL NAME	COMMON NAME	CONT.	HEIGHT	SPREAD	SPACING	QUANTITY	NOTES
TREES								
BA	Bulnesia arborea	Verawood	B&B	14'	4'		1	
QV	Quercus virginiana	Live Oak		14'	4'		2	Container grown
SS	Senna surrantensis	Glaucous Cassia	B&B	10'	3'		1	Standard
SHRUBS AND GROUNDCOVER								
CBM	Cordyline fruticosa 'Black Magic'	Black Magic Ti Plant	7 gallon	3'	3'	as shown	1	3 plants/pot
CI	Chrysobalanus icaco 'Red Tip'	Red-Tip Cocoplum	3 gallon	24"	18"	24" O.C.	20	
VS	Viburnum odoratissimum	Sweet Viburnum	3 gallon	24"	18"	24" O.C.	7	
CGN	Clusia guttifera 'Nana'	Dwarf Small Leaf Clusia	3 gallon	15"	15"	24" O.C.	19	
PS	Philodendron selloum	Split Leaf Philodendron	7 gallon	30"	30"	as shown	1	
SPECIFIED SIZES ARE MINIMUM REQUIREMENTS FOR MATERIAL. CONTAINER SIZE IS FOR REFERENCE ONLY.								
SOD - ST. AUGUSTINE 'FLORATAM' - VERIFY SQUARE FOOTAGE IN FIELD								

SINGLE FAMILY 1 TYPICAL UNIT CORNER LOT PLANTING PLAN
SCALE: 1/16" = 1'-0"

SEAL:
REGISTERED LANDSCAPE ARCHITECT
CHRISTOPHER SCOTT DAVIDSON
LA 0001419
STATE OF FLORIDA
Date:

DAVIDSON DESIGN STUDIO, INC.
LANDSCAPE ARCHITECTURE & SITE PLANNING
10610 NW 43rd Street
Coral Springs, Florida 33065
(954) 649-6688
CERTIFICATE # LC26000437

PROJECT:
A RICK CASE HABITAT COMMUNITY
POMPANO BEACH, FLORIDA
HABITAT FOR HUMANITY
3564 NORTH OCEAN BOULEVARD
FT. LAUDERDALE, FLORIDA 33308

DATE: 6/12/2017

SHEET: PP-2A

EXHIBIT "E"

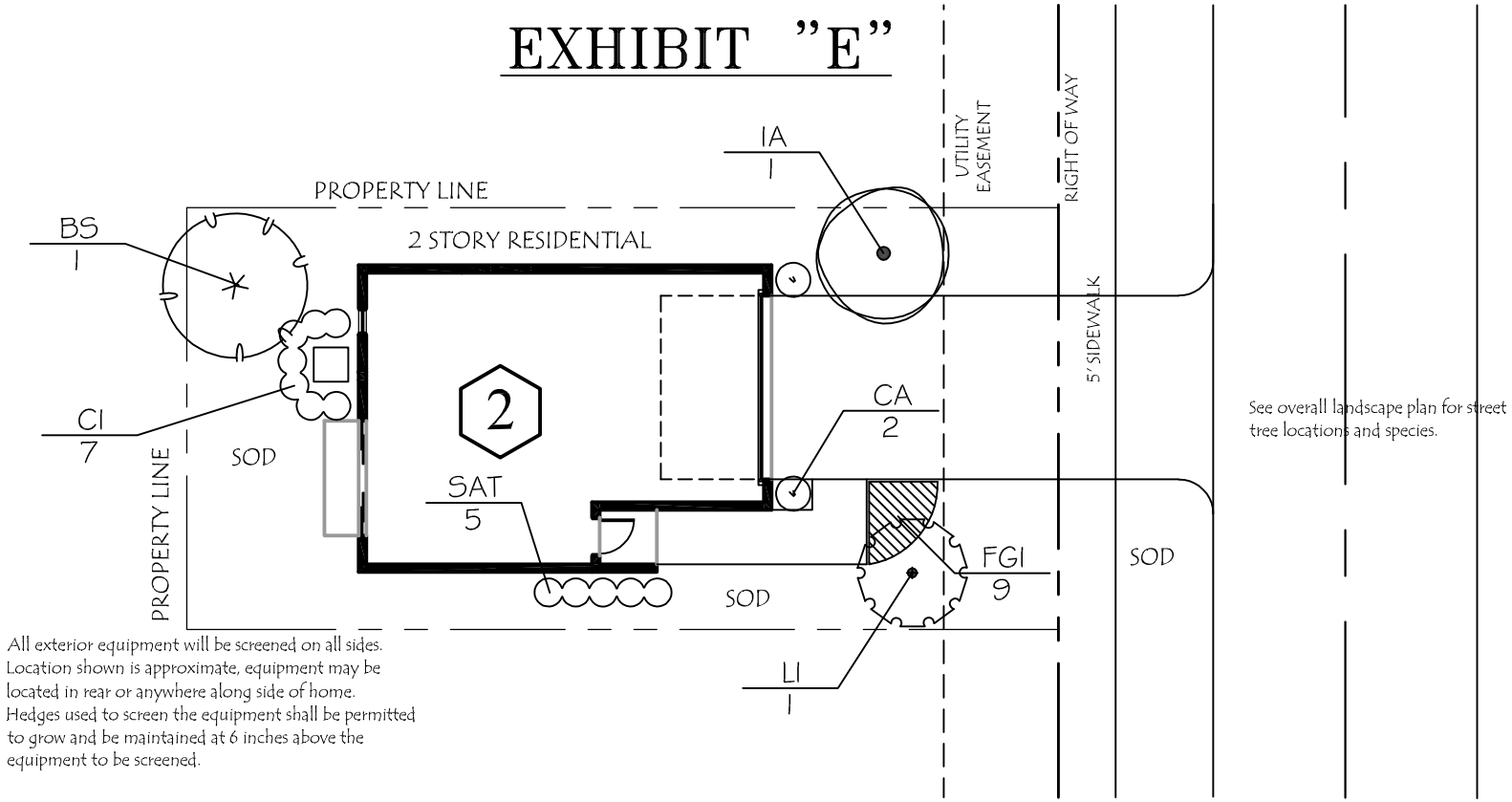

All exterior equipment will be screened on all sides. Location shown is approximate, equipment may be located in rear or anywhere along side of home. Hedges used to screen the equipment shall be permitted to grow and be maintained at 6 inches above the equipment to be screened.

SINGLE FAMILY 2 TYPICAL UNIT PLANT LIST

SYMBOL	BOTANICAL NAME	COMMON NAME	CONT.	HEIGHT	SPREAD	SPACING	QUANTITY	NOTES
TREES								
BS	Bursera simaruba	Gumbo Limbo	B&B	14'	4'		1	Standard
IA	Ilex attenuata 'East Palatka'	East Palatka Holly	B&B	14'	4'		1	Standard
LI	Lagerstroemia x 'Tuskegee'	Tuskegee Crape Myrtle	B&B	12'	4'		1	Standard
SHRUBS AND GROUNDCOVER								
CA	Crinum augustum 'Queen Emma'	Queen Emma Lily	15 gallon				2	
CI	Chrysobalanus icaco 'Red Tip'	Red-Tip Cocoplum	3 gallon	24"	18"	24" O.C.	7	
FGI	Ficus microcarpa 'Green Island'	Green Island Ficus	3 gallon	12"	12"	18" O.C.	9	
SAT	Schefflera arboricola 'Trinette'	Trinette	3 gallon	24"	18"	24" O.C.	5	
SPECIFIED SIZES ARE MINIMUM REQUIREMENTS FOR MATERIAL. CONTAINER SIZE IS FOR REFERENCE ONLY.								
SOD - ST. AUGUSTINE 'FLORATAM' - VERIFY SQUARE FOOTAGE IN FIELD								

SINGLE FAMILY 2 TYPICAL UNIT PLANTING PLAN

SCALE: 1/16" = 1'-0"

SEAL:

REGISTERED LANDSCAPE ARCHITECT
CHRISTOPHER SCOTT DAVIDSON
LA 0001419
STATE OF FLORIDA

Date: _____

DAVIDSON DESIGN STUDIO, INC.

LANDSCAPE ARCHITECTURE & SITE PLANNING

10610 NW 43rd Street
Coral Springs, Florida 33065
(954) 649-6688
CERTIFICATE # LC26000437

PROJECT:

A RICK CASE HABITAT COMMUNITY

POMPANO BEACH, FLORIDA

HABITAT FOR HUMANITY
3564 NORTH OCEAN BOULEVARD
FT. LAUDERDALE, FLORIDA 33308

DATE: 6/12/2017

SHEET: PP-3

EXHIBIT "E"

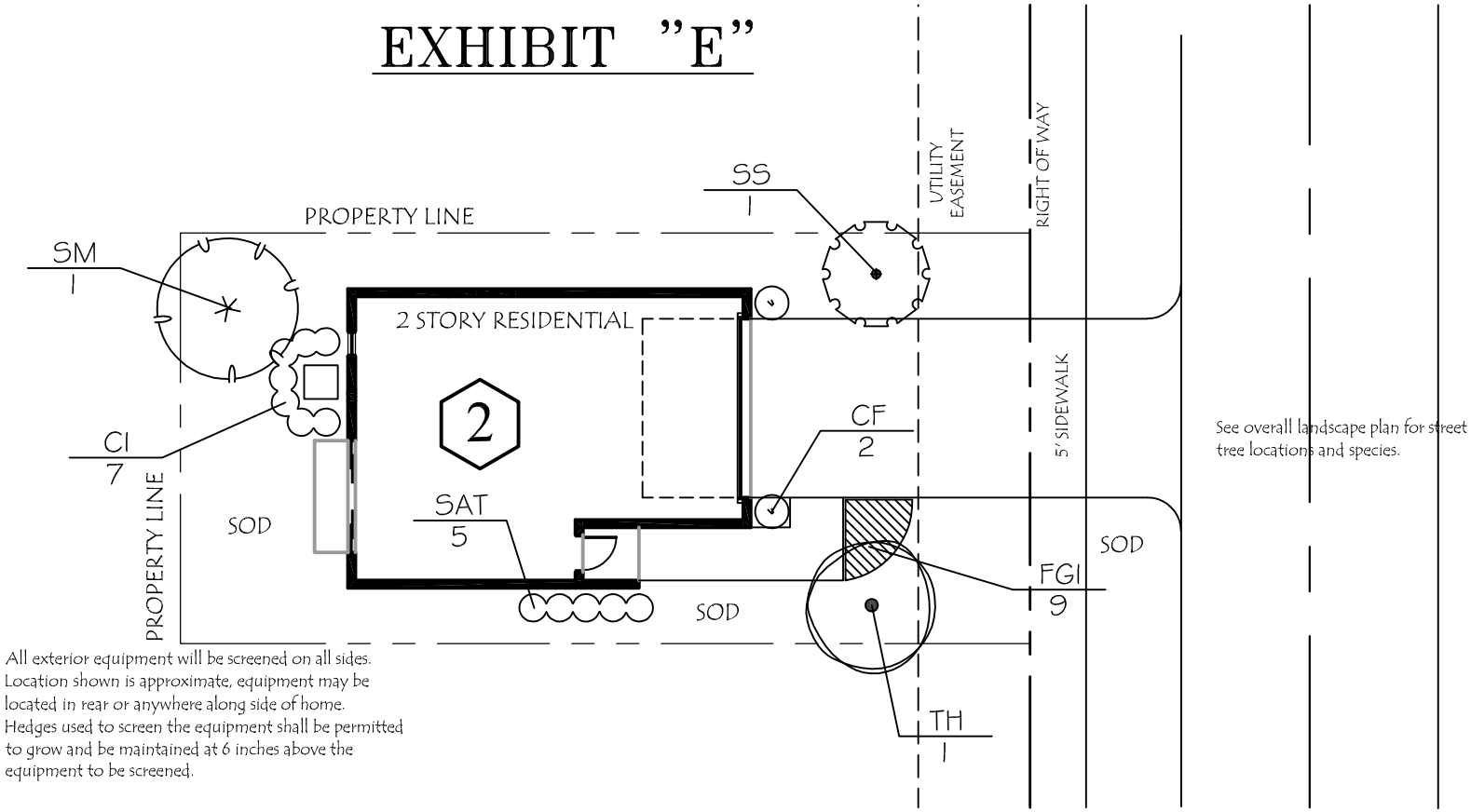

All exterior equipment will be screened on all sides. Location shown is approximate, equipment may be located in rear or anywhere along side of home. Hedges used to screen the equipment shall be permitted to grow and be maintained at 6 inches above the equipment to be screened.

SINGLE FAMILY 2 TYPICAL UNIT PLANT LIST

SYMBOL	BOTANICAL NAME	COMMON NAME	CONT.	HEIGHT	SPREAD	SPACING	QUANTITY	NOTES
TREES								
SM	Swietenia mahagoni	Mahogany	B&B	14'	4'		1	
SS	Senna suratensis	Glaucous Cassia	B&B	14'	4'		1	Standard
TH	Tabebuia heterophylla	Pink Trumpet Tree	B&B	12'	4'		1	Standard
SHRUBS AND GROUNDCOVER								
CF	Cordyline fruticosa	Ti Plant	7 gallon	3'	2'	as shown	2	3 plants/pot
CI	Chrysobalanus icaco 'Red Tip'	Red-Tip Cocoplum	3 gallon	24"	18"	24" O.C.	7	
FGI	Ficus microcarpa 'Green Island'	Green Island Ficus	3 gallon	12"	12"	18" O.C.	9	
SAT	Schefflera arboricola 'Trinette'	Trinette	3 gallon	24"	18"	24" O.C.	5	

SPECIFIED SIZES ARE MINIMUM REQUIREMENTS FOR MATERIAL. CONTAINER SIZE IS FOR REFERENCE ONLY.
SOD - ST. AUGUSTINE 'FLORATAM' - VERIFY SQUARE FOOTAGE IN FIELD

SINGLE FAMILY 2 TYPICAL UNIT PLANTING PLAN

SCALE: 1/16" = 1'-0"

SEAL:
REGISTERED LANDSCAPE ARCHITECT
CHRISTOPHER SCOTT DAVIDSON
LA 0001419
STATE OF FLORIDA
Date: _____

DAVIDSON DESIGN STUDIO, INC.
LANDSCAPE ARCHITECTURE & SITE PLANNING
10610 NW 43rd Street
Coral Springs, Florida 33065
(954) 649-6688
CERTIFICATE # LC26000437

PROJECT:
A RICK CASE HABITAT COMMUNITY
POMPANO BEACH, FLORIDA
HABITAT FOR HUMANITY
3564 NORTH OCEAN BOULEVARD
FT. LAUDERDALE, FLORIDA 33308

DATE: 6/12/2017

SHEET: PP-3A

EXHIBIT "E"

All exterior equipment will be screened on all sides. Location shown is approximate, equipment may be located in rear or anywhere along side of home. Hedges used to screen the equipment shall be permitted to grow and be maintained at 6 inches above the equipment to be screened.

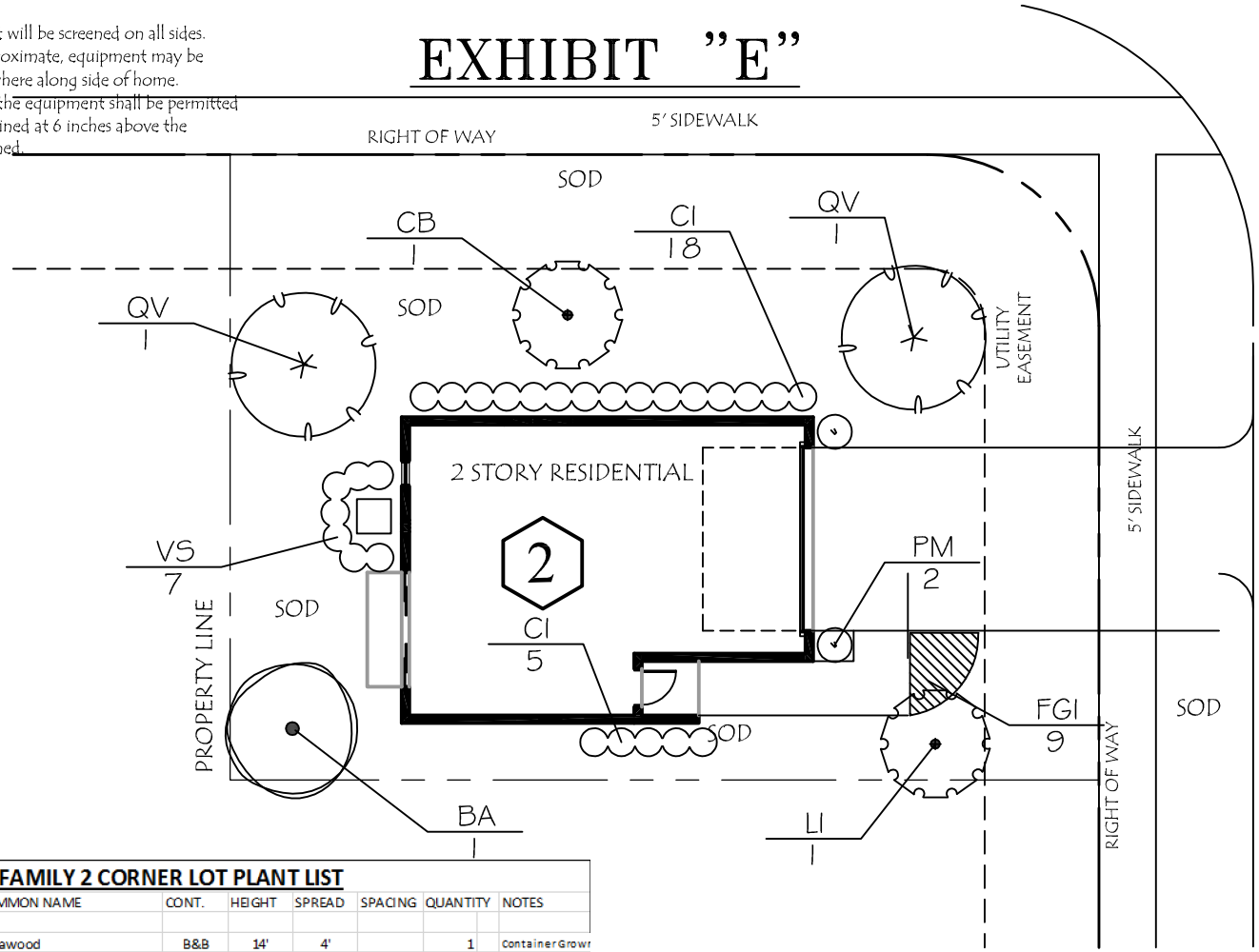

See overall landscape plan for street tree locations and species.

SINGLE FAMILY 2 TYPICAL UNIT CORNER LOT PLANTING PLAN

SCALE: 1/16" = 1'-0"

SINGLE FAMILY 2 CORNER LOT PLANT LIST

SYMBOL	BOTANICAL NAME	COMMON NAME	CONT.	HEIGHT	SPREAD	SPACING	QUANTITY	NOTES
TREES								
BA	Bulnesia arborea	Verawood	B&B	14'	4'		1	Container Grown
QV	Quercus virginiana	Live Oak	B&B	14'	4'		2	Container Grown
LI	Lagerstroemia x 'Tuskegee'	Tuskegee Crape Myrtle	B&B	12'	4'		1	Standard
CB	Cordia boissieri	White Geiger Tree	B&B	10'	3'		1	
SHRUBS AND GROUNDCOVER								
PM	Podocarpus macrophyllus	Maki	7 gallon	4'	24"	as shown	2	column, full
CI	Chrysobalanus icaco 'Red Tip'	Red-Tip Cocoplum	3 gallon	24"	18"	24" O.C.	23	
FGI	Ficus microcarpa 'Green Island'	Green Island Ficus	3 gallon	12"	12"	18" O.C.	9	
VS	Viburnum odoratissimum	Sweet Viburnum	3 gallon	24"	18"	24" O.C.	7	

SPECIFIED SIZES ARE MINIMUM REQUIREMENTS FOR MATERIAL. CONTAINER SIZE IS FOR REFERENCE ONLY.

SOD - ST. AUGUSTINE 'FLORATAM' - VERIFY SQUARE FOOTAGE IN FIELD

SEAL: REGISTERED LANDSCAPE ARCHITECT CHRISTOPHER SCOTT DAVIDSON LA 0001419 STATE OF FLORIDA

Date: _____

DAVIDSON DESIGN STUDIO, INC.

LANDSCAPE ARCHITECTURE & SITE PLANNING

10610 NW 43rd Street
Coral Springs, Florida 33065
(954) 649-6688
CERTIFICATE # LC26000437

PROJECT:

A RICK CASE HABITAT COMMUNITY

POMPANO BEACH, FLORIDA

HABITAT FOR HUMANITY
3564 NORTH OCEAN BOULEVARD
FT. LAUDERDALE, FLORIDA 33308

DATE: 6/12/2017

SHEET: PP-4

EXHIBIT "E"

All exterior equipment will be screened on all sides. Location shown is approximate, equipment may be located in rear or anywhere along side of home. Hedges used to screen the equipment shall be permitted to grow and be maintained at 6 inches above the equipment to be screened.

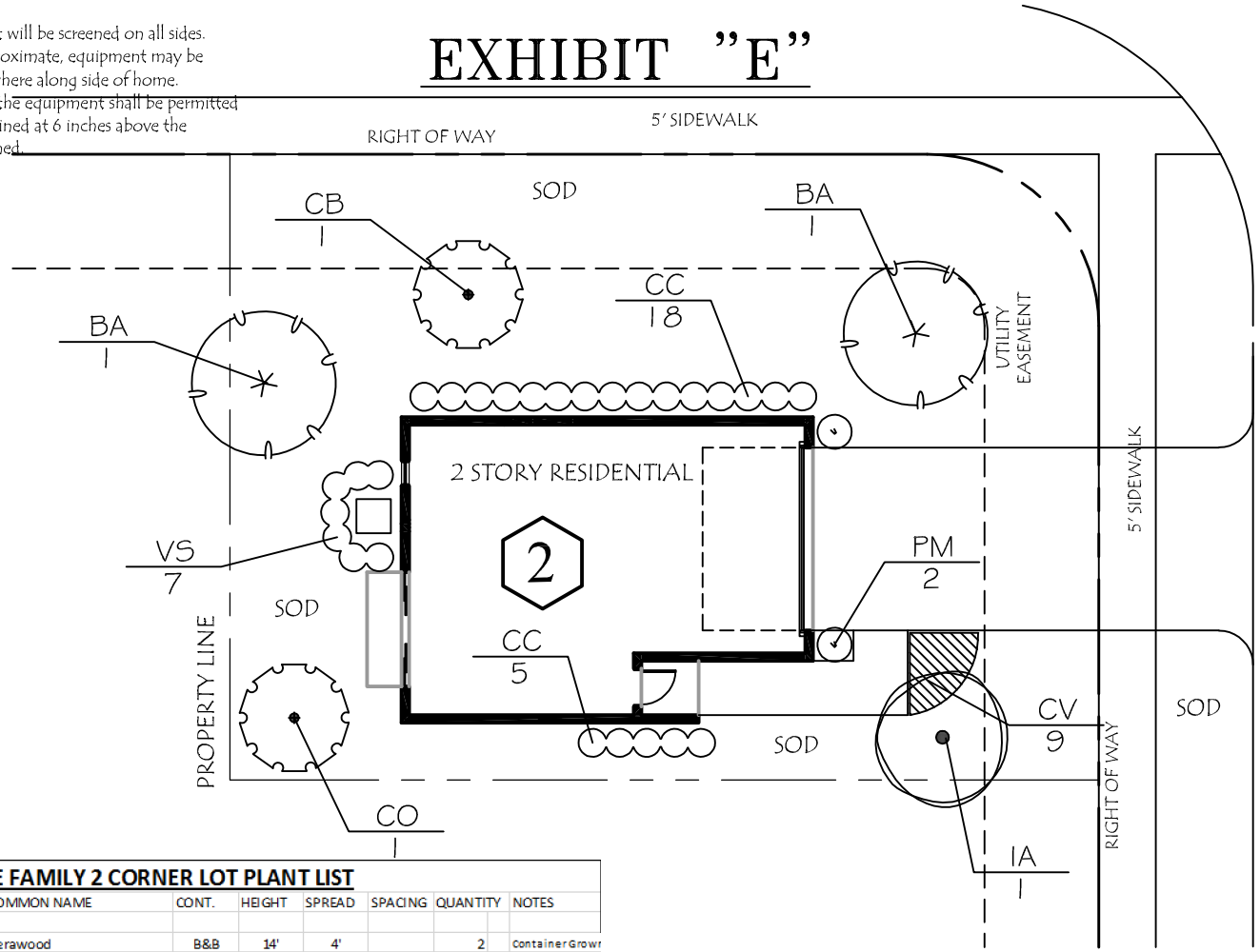

See overall landscape plan for street tree locations and species.

SINGLE FAMILY 2 TYPICAL UNIT CORNER LOT PLANTING PLAN

SCALE: 1/16" = 1'-0"

SINGLE FAMILY 2 CORNER LOT PLANT LIST

SYMBOL	BOTANICAL NAME	COMMON NAME	CONT.	HEIGHT	SPREAD	SPACING	QUANTITY	NOTES
TREES								
BA	Bulnesia arborea	Verawood	B&B	14'	4'		2	Container Grown
IA	Ilex attenuata 'East Palatka'	East Palatka Holly	B&B	14'	4'		1	Container Grown
CO	Cordia sebestena	Orange Geiger Tree	B&B	12'	4'		1	Standard
CB	Cordia boissieri	White Geiger Tree	B&B	10'	3'		1	
SHRUBS AND GROUNDCOVER								
PM	Podocarpus macrophyllus	Maki	7 gallon	4'	24"	as shown	2	column, full
CC	Capparis cynophallophora	Jamaica Caper	3 gallon	24"	24"	24" O.C.	23	
CV	Codiaeum varietum 'Mammey'	Mammey Croton	3 gallon	18"	12"	24" O.C.	9	
VS	Viburnum odoratissimum	Sweet Viburnum	3 gallon	24"	18"	24" O.C.	7	

SPECIFIED SIZES ARE MINIMUM REQUIREMENTS FOR MATERIAL. CONTAINER SIZE IS FOR REFERENCE ONLY.

SOD - ST. AUGUSTINE 'FLORATAM' - VERIFY SQUARE FOOTAGE IN FIELD

SEAL:

REGISTERED LANDSCAPE ARCHITECT
CHRISTOPHER SCOTT DAVIDSON
LA 0001419
STATE OF FLORIDA

Date: _____

DAVIDSON DESIGN STUDIO, INC.

LANDSCAPE ARCHITECTURE & SITE PLANNING

10610 NW 43rd Street
Coral Springs, Florida 33065
(954) 649-6688
CERTIFICATE # LC26000437

PROJECT:

A RICK CASE HABITAT COMMUNITY

POMPANO BEACH, FLORIDA

HABITAT FOR HUMANITY
3564 NORTH OCEAN BOULEVARD
FT. LAUDERDALE, FLORIDA 33308

DATE: 6/12/2017

SHEET: PP-4A

EXHIBIT F
TYPICAL RESIDENTIAL PLAN

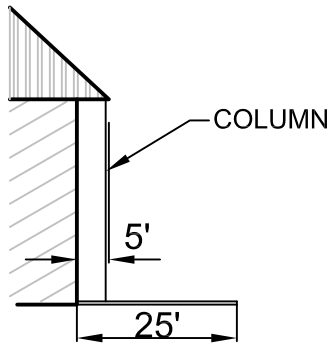

FRONT
ENCROAHMENT

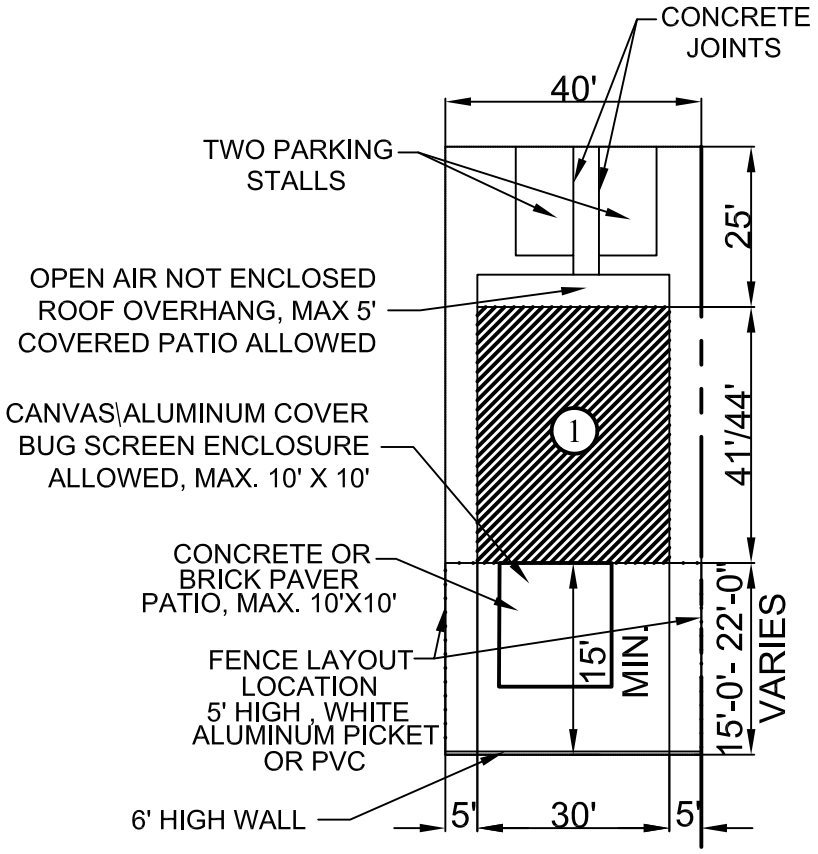

SINGLE FAMILY 1
1- STORY

WINDOWS ARE ALLOWED ON
ALL SIDES OF BUILDING

EXHIBIT F-1 TYPICAL RESIDENTIAL PLAN
TYPE A (LOTS 1 - 18)

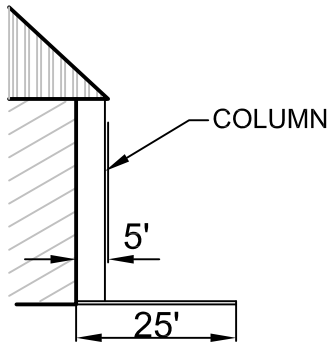

FRONT
ENCROAHMENT

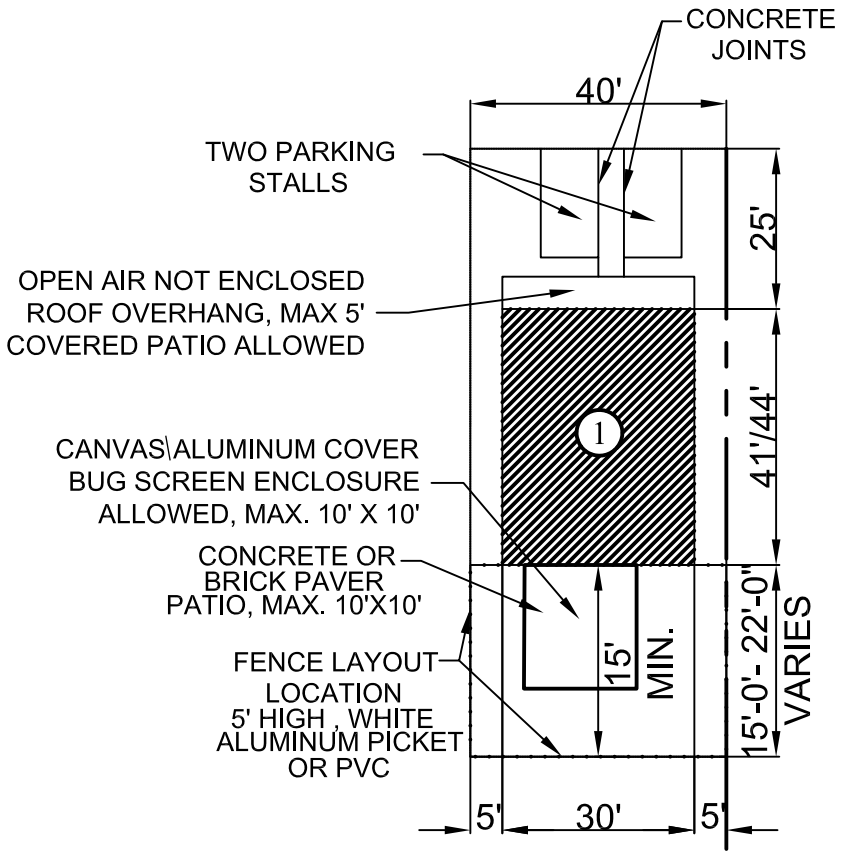

SINGLE FAMILY 1
1- STORY

WINDOWS ARE ALLOWED ON
ALL SIDES OF BUILDING

EXHIBIT F-2 TYPICAL RESIDENTIAL PLAN
TYPE B (LOTS 19 - 27)

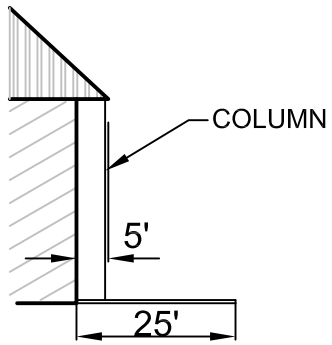

FRONT
ENCROAHMENT

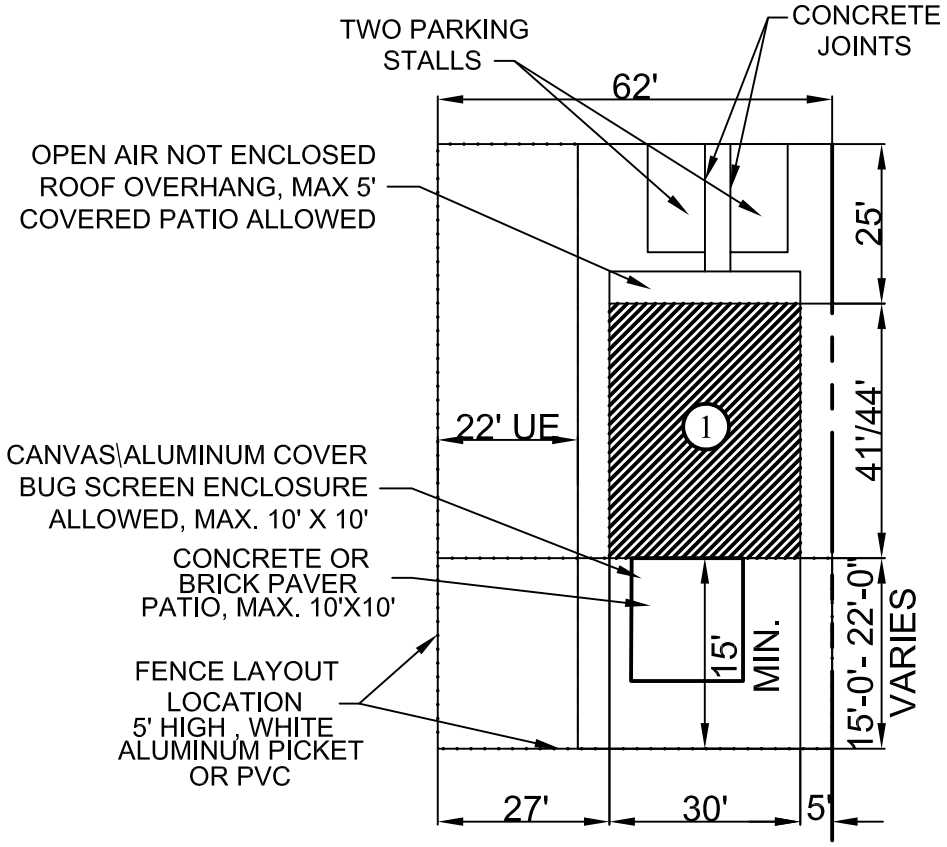

SINGLE FAMILY 1
1- STORY

WINDOWS ARE ALLOWED ON
ALL SIDES OF BUILDING

EXHIBIT F-3 TYPICAL RESIDENTIAL PLAN
TYPE C (LOT 28)

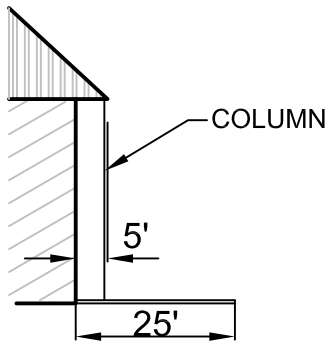

FRONT
ENCROAHMENT

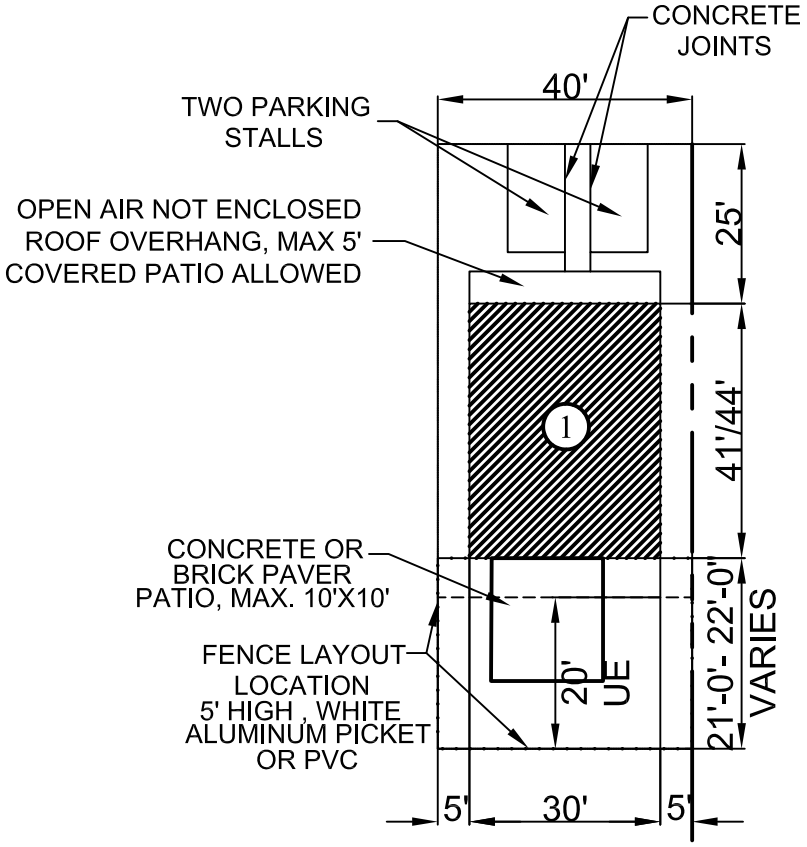

SINGLE FAMILY 1
1- STORY

WINDOWS ARE ALLOWED ON
ALL SIDES OF BUILDING

EXHIBIT F-4 TYPICAL RESIDENTIAL PLAN

TYPE D (LOTS 29 - 42)

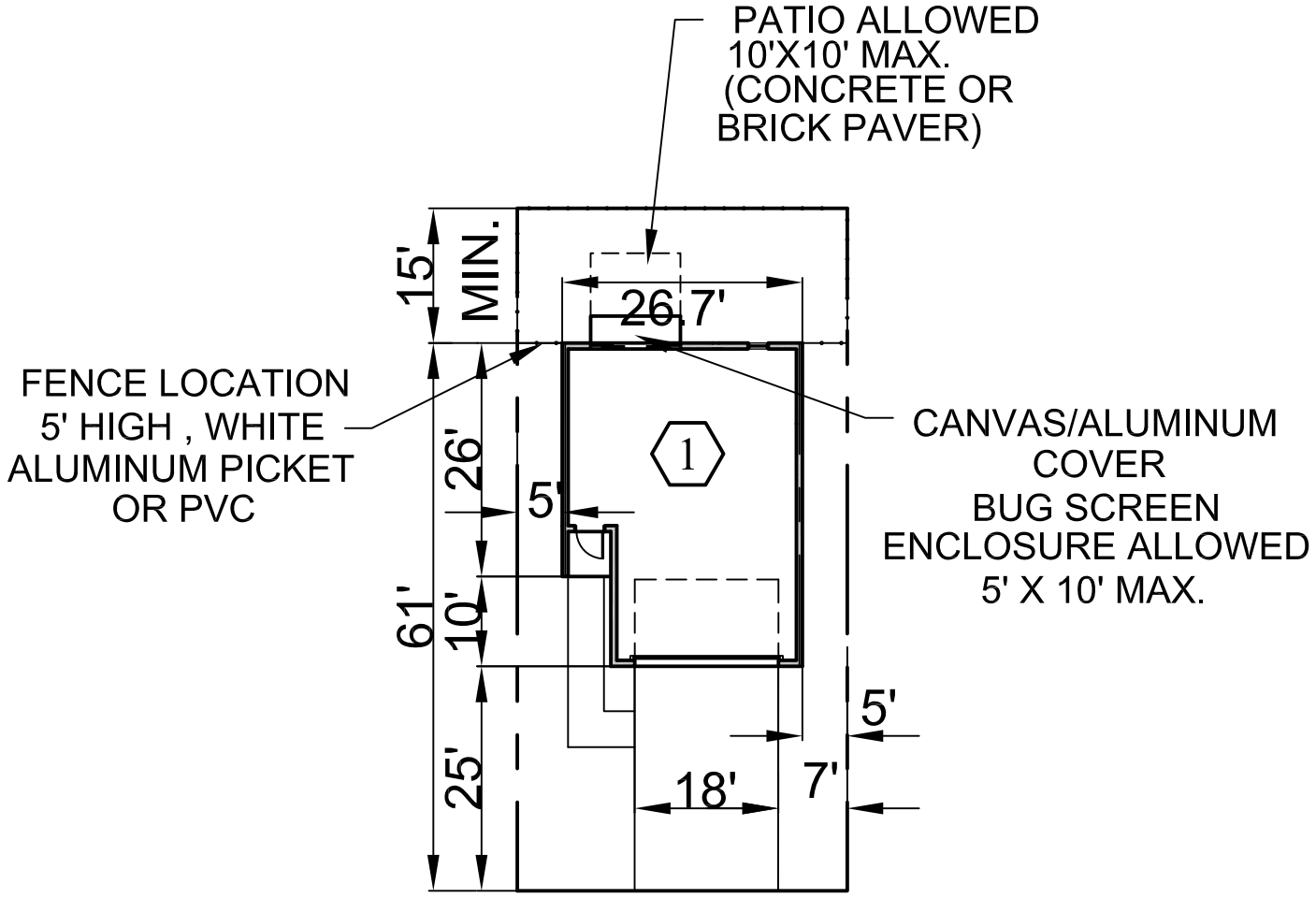

SINGLE FAMILY 2
2- STORY

WINDOWS ARE ALLOWED ON
ALL SIDES OF BUILDING

EXHIBIT F-5 TYPICAL RESIDENTIAL PLAN
TYPE E (LOTS 44-46, 49-51, 54-56,
59-61, 64-66, 69-71, 74-76)

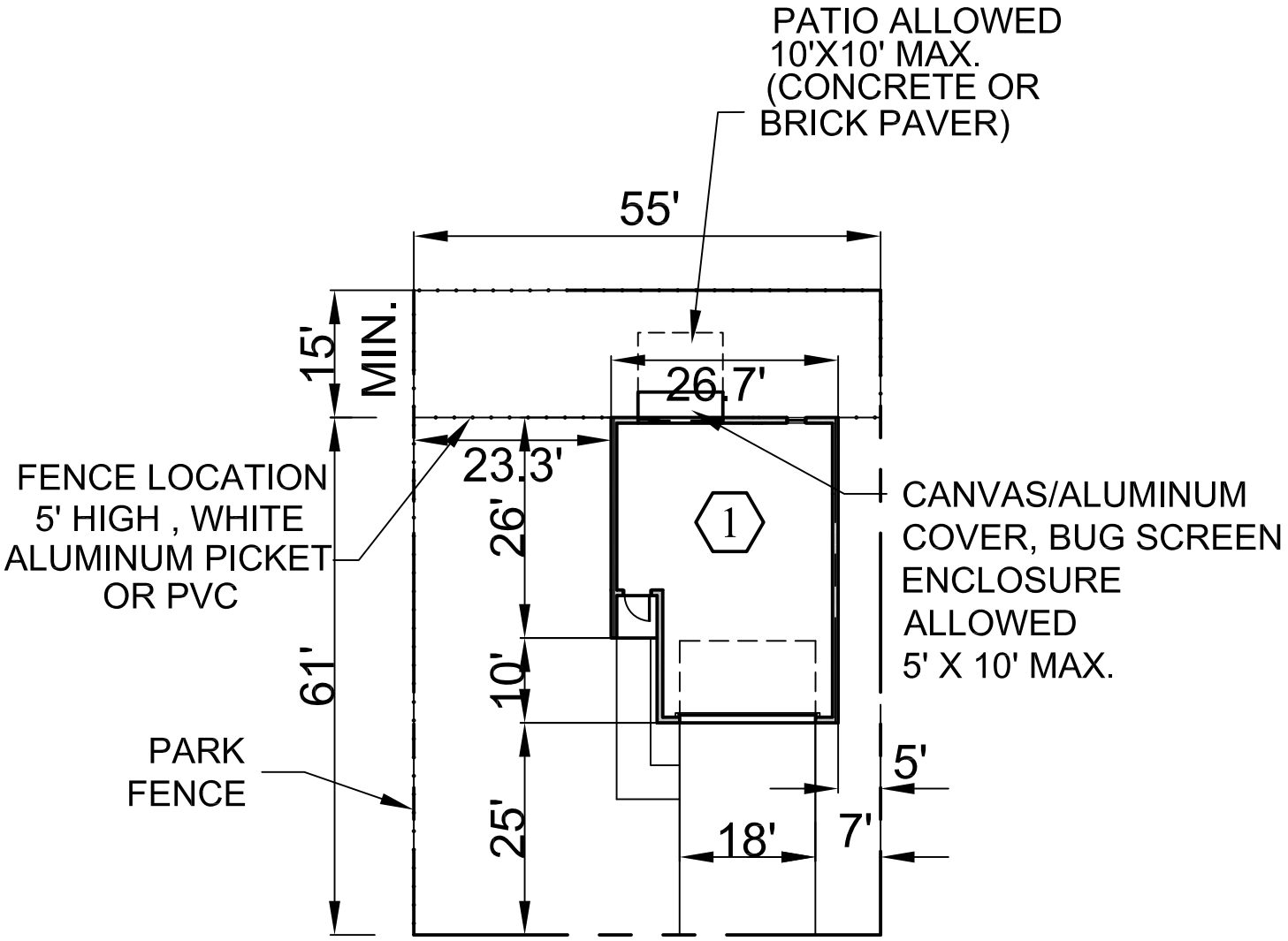

SINGLE FAMILY 2
2- STORY

WINDOWS ARE ALLOWED ON
ALL SIDES OF BUILDING

EXHIBIT F-6 TYPICAL RESIDENTIAL PLAN

TYPE F (LOT 43)

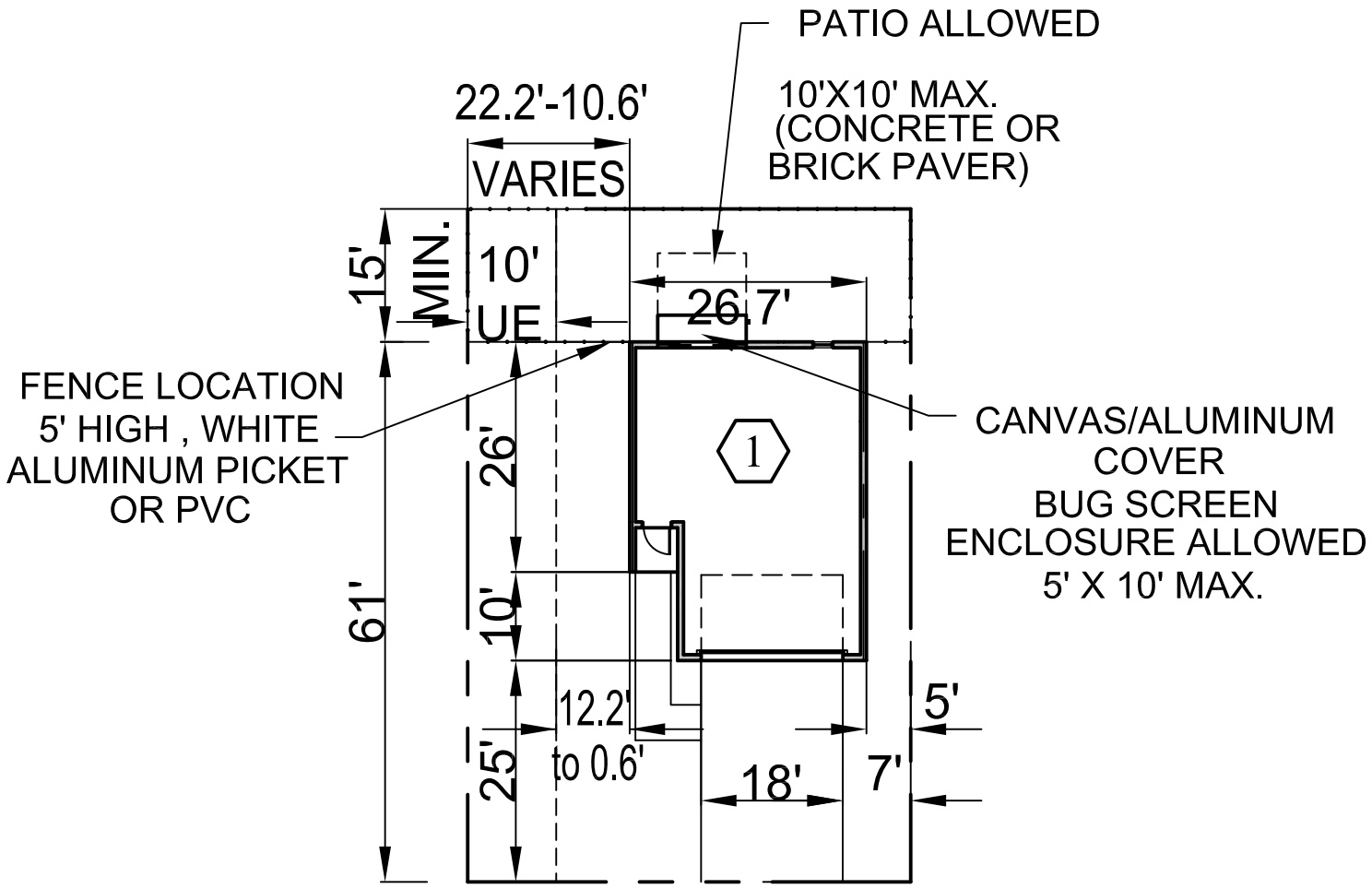

SINGLE FAMILY 2
2- STORY

WINDOWS ARE ALLOWED ON
ALL SIDES OF BUILDING

EXHIBIT F-7 TYPICAL RESIDENTIAL PLAN

TYPE G (LOTS 47, 48, 52, 53, 57, 58, 62, 63, 67, 68, 72, 73, 77)

EXHIBIT G
PEDESTRIAN CIRCULATION AND RECREATIONAL OPEN SPACE

EXHIBIT G

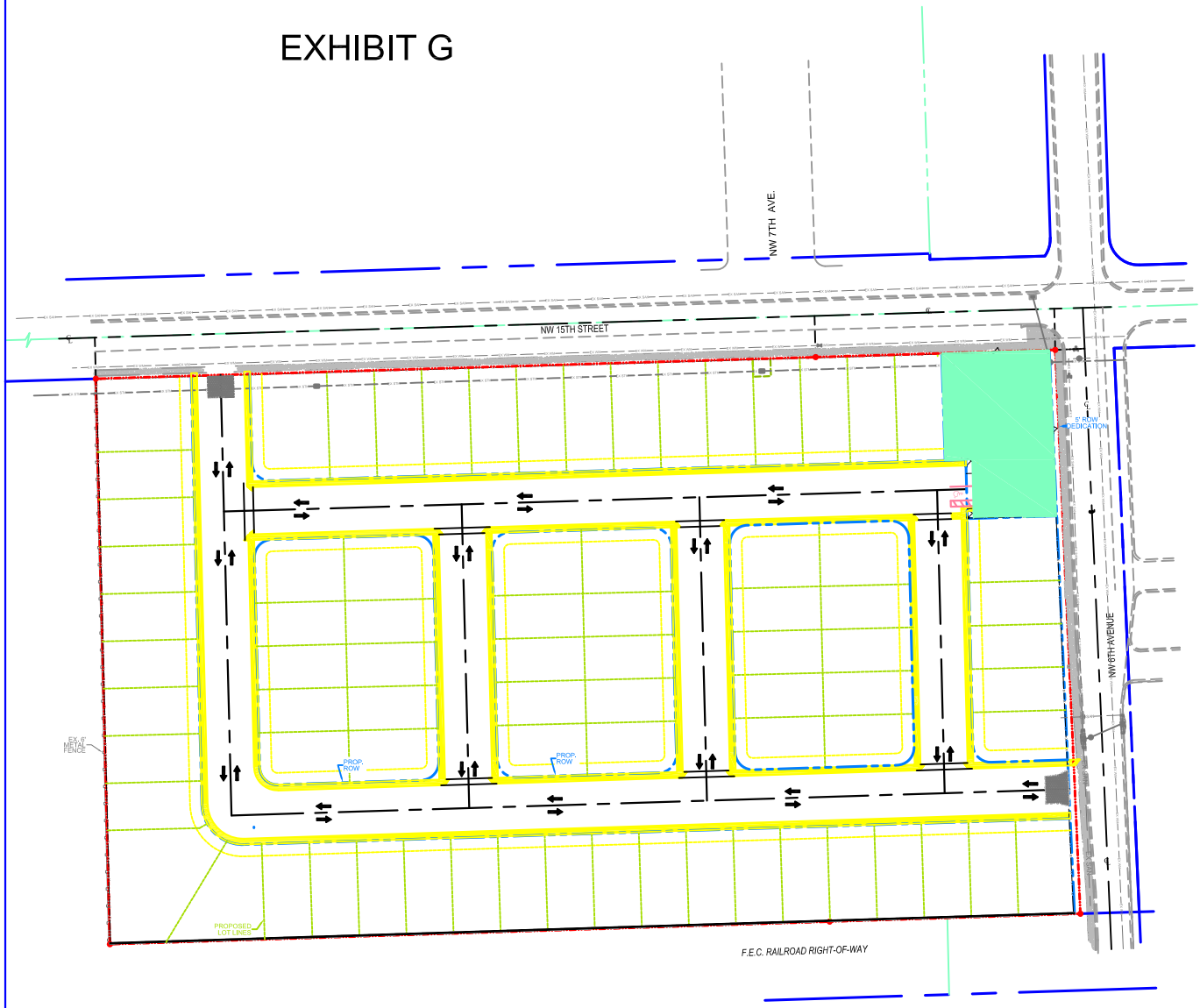

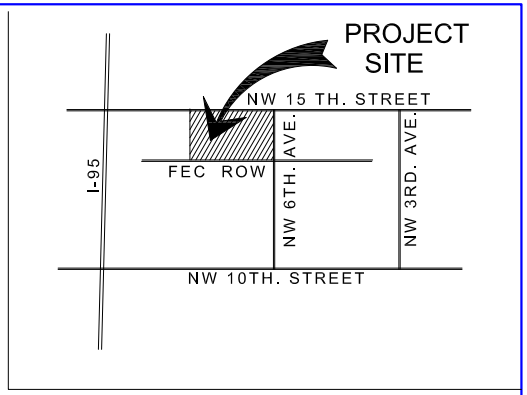

VECINITY MAP
(N.T.S.)

LEGEND

PROPOSED PEDESTRIAN CIRCULATION

- SIDEWALKS
- WALKWAYS
- FITNESS TRAIL

PROPOSED RECREATION/OPEN SPACE

- OPEN SPACE
- PLAYGROUND

NO.	DATE	BY	REVISION

Designed by: J.H. Date: 07/16
Drawn by: A.Z. Date: 07/16
Checked by: J.H. Date: 07/16

Approved by: Date:
Registered Engineer Number
State of Florida

HSQ GROUP, INC.
Engineers · Planners · Surveyors
1489 West Palmetto Park Road, Suite 340
Boca Raton, Florida 33486 · 561.392.0221
C26258 · LB7924

A RICK CASE HABITAT COMMUNITY
CONCEPTUAL MASTER PLAN
PEDESTRIAN CIRCULATION, RECREATION, OPEN SPACE

PROJECT NUMBER 14069-34
SHEET NUMBER EXHIBIT G

EXHIBIT H
BUILDING USE PLAN

EXHIBIT H

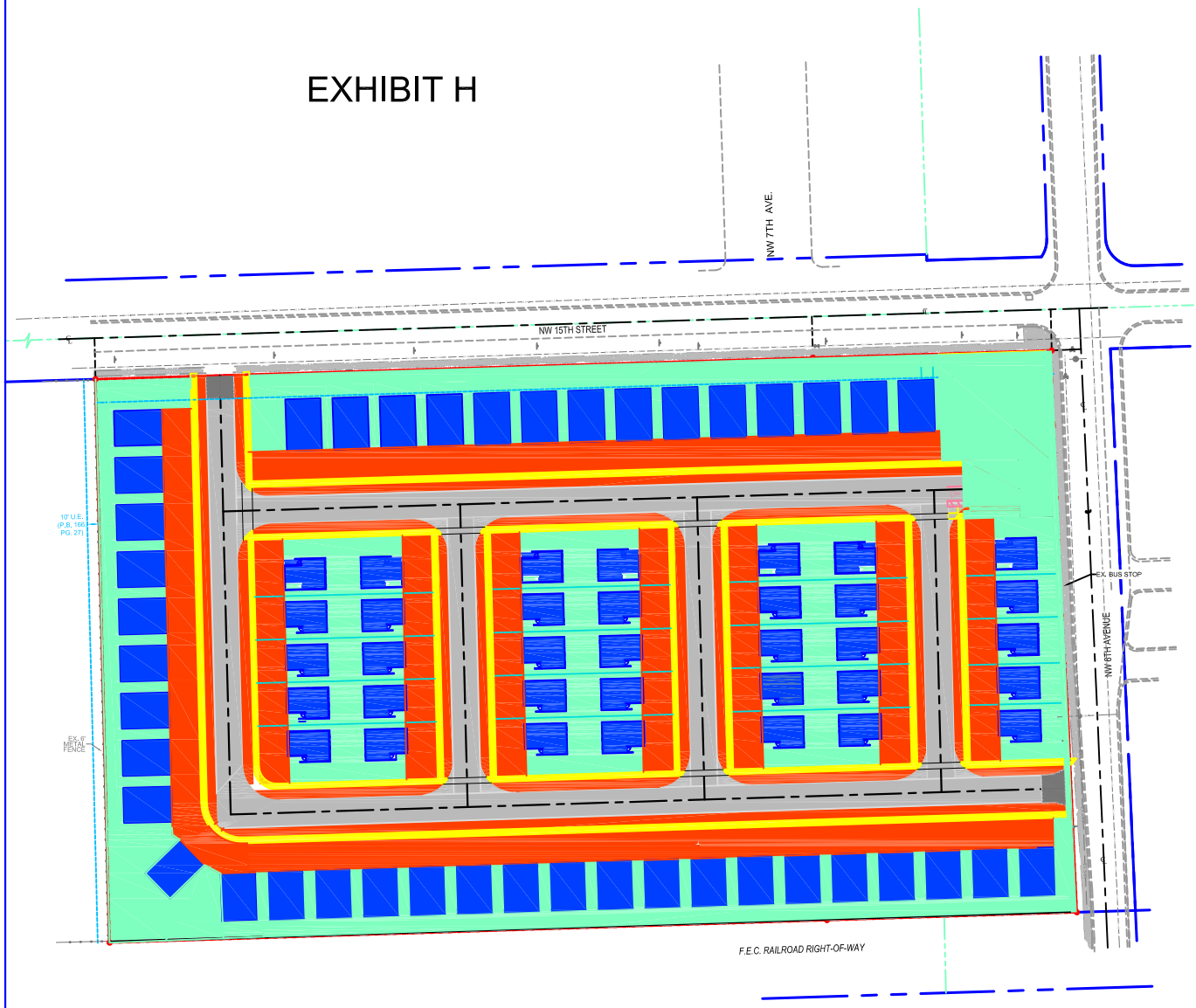

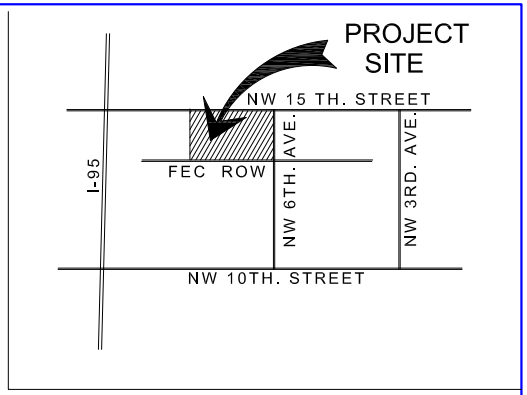

VECINITY MAP
(N.T.S.)

LEGEND

- LANDSCAPE BUFFER LANDSCAPE AREA
- ROAD NETWORK
- ONE AND TWO STORY UNITS
- TRANSITION AREA (LANDSCAPE, SIDEWALK, DRIVE)
- PEDESTRIAN ACCESS

NO.	DATE	BY	REVISION

Designed by: J.H. Date: 07/16
Drawn by: A.Z. Date: 07/16
Checked by: J.H. Date: 07/16

Approved by: Date:
Registered Engineer Number
State of Florida

HSQ GROUP, INC.
Engineers · Planners · Surveyors
1489 West Palmetto Park Road, Suite 340
Boca Raton, Florida 33486 · 561.392.0221
C26258 · LB7924

A RICK CASE HABITAT COMMUNITY
BUILDING USE PLAN

PROJECT NUMBER 14069-34
SHEET NUMBER EXHIBIT H

EXHIBIT I
SCHMATIC UTILITIES LAYOUT

EXHIBIT I

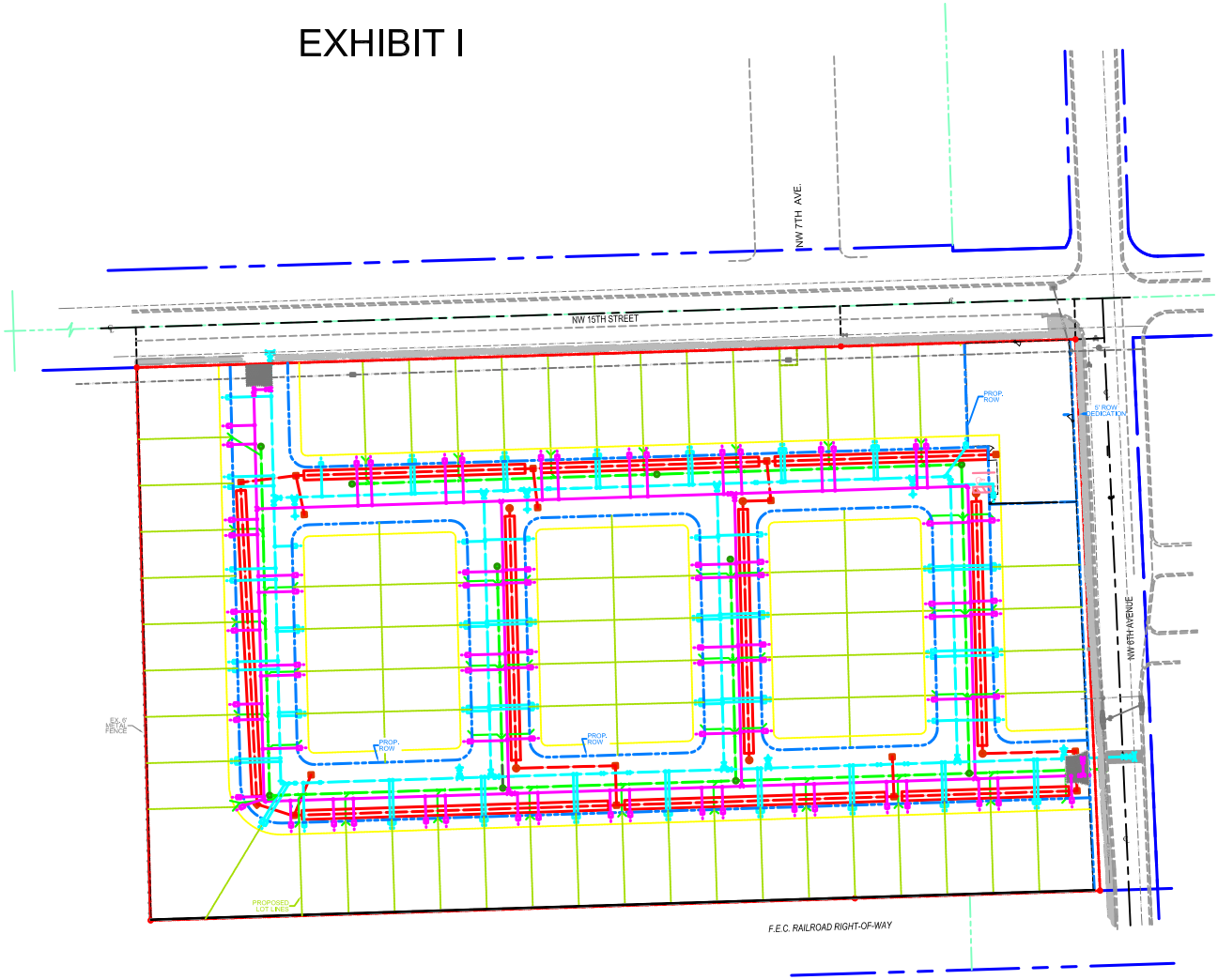

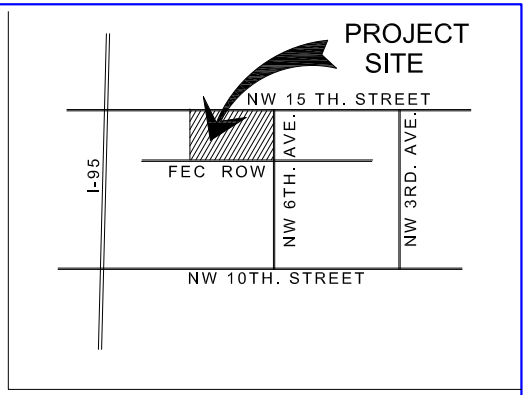

VECINITY MAP
(N.T.S.)

LEGEND

- STM — PROPOSED STORM DRAINAGE
- W — PROPOSED WATER MAIN
- SAN — PROPOSED SANITARY SEWER
- W — PROPOSED RECLAIMED WATER

NO.	DATE	BY	REVISION

Designed by: J.H. Date: 07/16
Drawn by: A.Z. Date: 07/16
Checked by: J.H. Date: 07/16

Approved by: Date:
Registered Engineer Number
State of Florida

HSQ GROUP, INC.
Engineers · Planners · Surveyors
1489 West Palmetto Park Road, Suite 340
Boca Raton, Florida 33486 · 561.392.0221
C26258 · LB7924

A RICK CASE HABITAT COMMUNITY
CONCEPTUAL MASTER PLAN
SCHEMATIC UTILITIES LAYOUT

PROJECT NUMBER 14069-34
SHEET NUMBER EXHIBIT I

EXHIBIT J
UTILITIES PLAN

EXHIBIT J

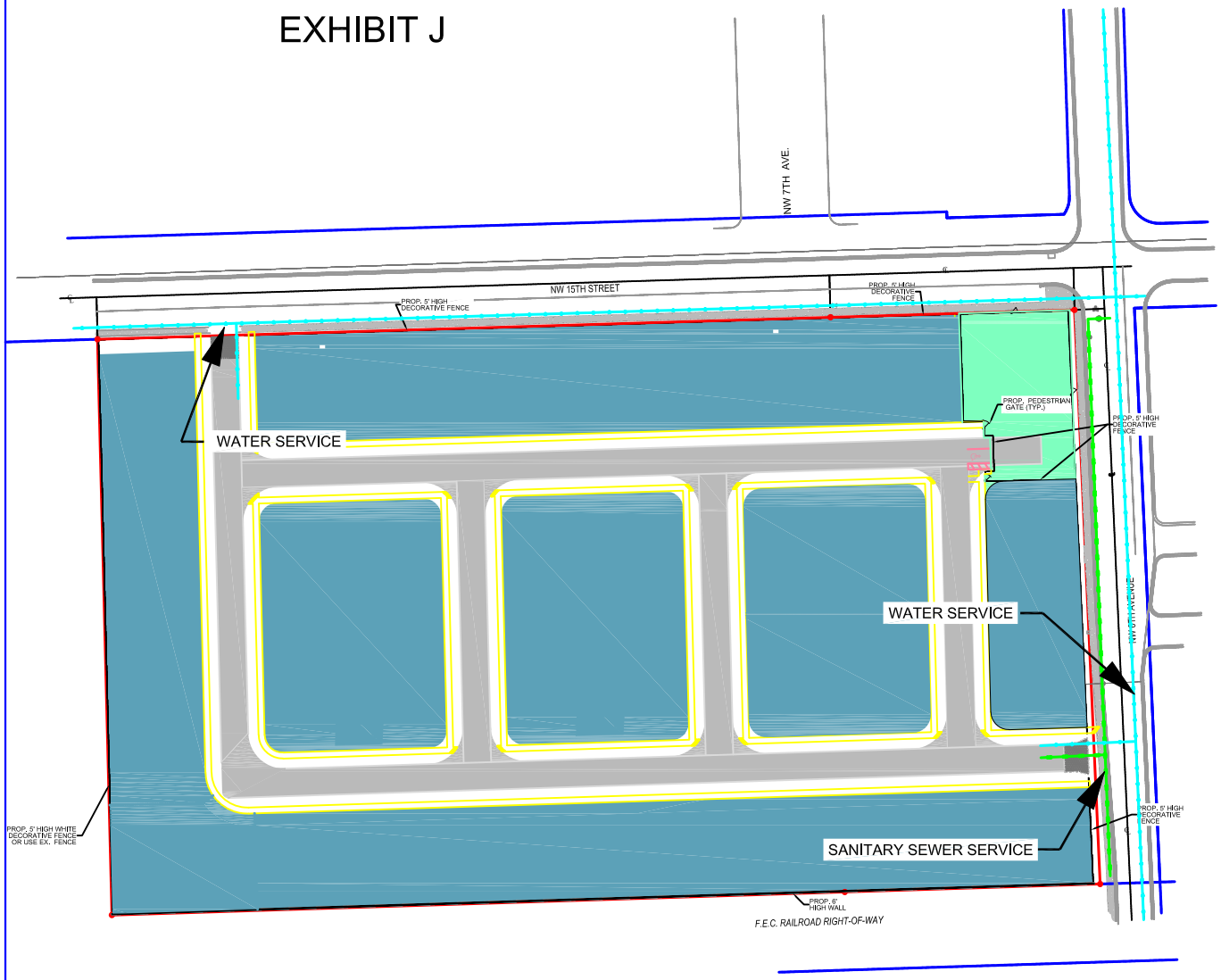

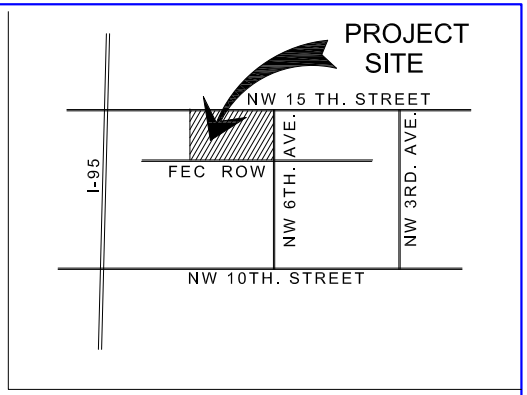

VECINITY MAP
(N.T.S.)

NOTE: WATER AND SEWER LINES WILL NOT BE LOCATED WITHIN LANDSCAPE AREAS

NO.	DATE	BY	REVISION

Designed by: J.H. Date: 07/16
Drawn by: A.Z. Date: 07/16
Checked by: J.H. Date: 07/16

Approved by: Date:
Registered Engineer Number
State of Florida

HSQ GROUP, INC.
Engineers · Planners · Surveyors
1489 West Palmetto Park Road, Suite 340
Boca Raton, Florida 33486 · 561.392.0221
C26258 · LB7924

A RICK CASE HABITAT COMMUNITY

UTILITIES PLAN CONNECTIONS

PROJECT NUMBER 14069-34
SHEET NUMBER EXHIBIT J

EXHIBIT K
PHASING PLAN

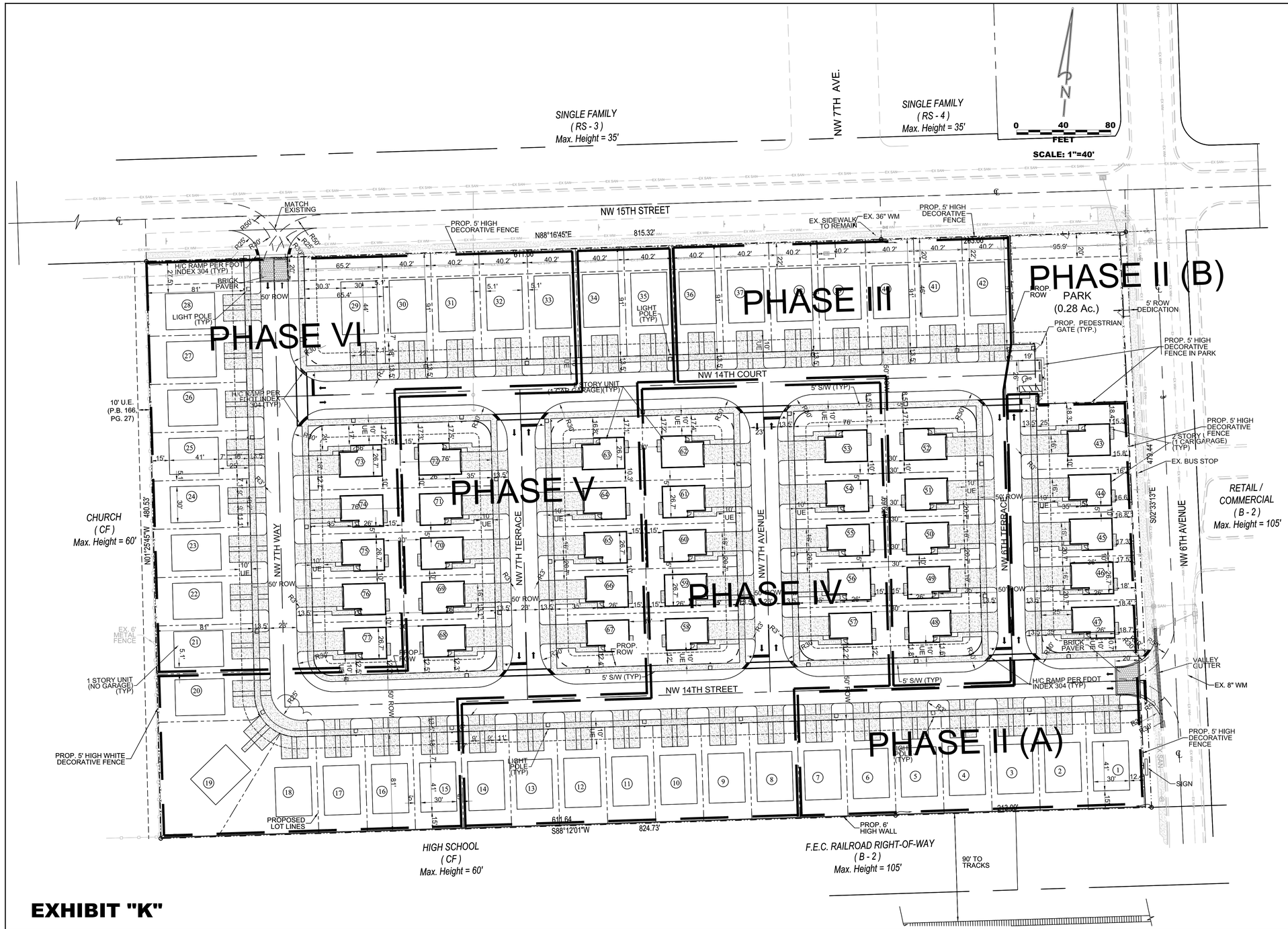

PHASE I

- PERIMETER LANDSCAPING
- PERIMETER WALL
- PERIMETER FENCE
- INFRASTRUCTURE
- 1st. LIFT OF ASPHALT

PHASE II (A)

- 7 (1 STORY)
- 5 (2 STORY)

PHASE II (B)

- PARK

PHASE III

- 7 (1 STORY)
- 5 (2 STORY)

PHASE IV

- 7 (1 STORY)
- 10 (2 STORY)

PHASE IV (A)

- VERTICAL COMPONENT OF PARK REQUIRED PRIOR TO 70% BUILDOUT.

PHASE V

- 8 (1 STORY)
- 10 (2 STORY)

PHASE VI

- 13 (1 STORY)
- 5 (2 STORY)

EXHIBIT "K"

NO.	DATE	BY	REVISIONS	NO.	DATE	BY	REVISIONS

Designed by: JH Date: 01/15
Drawn by: JLS Date: 01/15
Checked by: JH Date: 01/15

HSQ GROUP, INC.
Engineers · Planners · Surveyors
1489 West Palmetto Park Road, Suite 340
Boca Raton, Florida 33486 · 561.392.0221
C26258 · LB7924

A RICK CASE HABITAT COMMUNITY
PHASING PLAN

SCALE: 1" = 40'
PROJECT NUMBER: 1406-34
SHEET NUMBER: PHA-1

Date: 6/14/17
Approved by: JAY HUEBNER, P.E.
Registered Engineer No: 54615
State of Florida

2/22/17

z:\projects\2014\1406-34 habitat abyssinian\drawings\site plan\140634_phasing_site.dwg